REV. 7-1-72: CHANGED DEPARTMENT NAME.

REV. 1-7-76: CHANGED DWG. NO. FROM G-10-41 TO D-PE-1.

REV. 2-12-76: ADDED DETAIL FOR BEVELS ON 90° ENDWALLS.

DIAM. D	DIMENSIONS												REINFORCING STEEL						QUANTITIES IN ONE ENDWALL	
	A	B	C	SKEW	E	J1	J2	WING	Ø	K	M	R	H-BARS #4 3'-3" LG. NO.	G - BARS #6 NO.	LENGTH L1	LENGTH L2	LENGTH TOTAL	BEND Y-INS.	STEEL LBS.	CONC. CU. YDS.
36"	2'-6"	1'-6"	1'-0"	90°	3'-8"	3'-6"	3'-6"	BOTH	45°-00'	6'-0¼"	1'-9¼"	1'-0"	8	4	6'-2"	3'-2"	9'-4"	11¾	73	3.89
				75°	3'-9½"	3'-8½"	3'-7'	LONG	37°-30'	7'-1¼"	2'-2¼"	1'-0"	4	2	7'-2"	3'-2"	10'-4"	15	73	4.00
								SHORT	52°-30'	5'-3¼"	1'-5¾"	1'-0"	3	2	5'-6"	3'-3"	8'-9"	9		
				60°	4'-2¾"	4'-1½"	3'-10"	LONG	30°-00'	8'-9¼"	2'-9¼"	1'-0"	5	2	8'-10"	3'-5"	12'-3"	19¾	80	4.37
								SHORT	60°-00'	4'-8½"	1'-3"	1'-0"	3	2	5'-0"	3'-6"	8'-6"	6¾		
				45°	5'-2¼"	5'-0¼"	4'-4½"	LONG	22°-30'	11'-7"	3'-9"	1'-0"	7	2	11'-7"	3'-11"	15'-6"	27	94	5.16
								SHORT	67°-30'	4'-3¾"	1'-0¾"	1'-0"	3	2	4'-7"	4'-0"	8'-7"	5		
42"	2'-6"	1'-9"	1'-0"	90°	4'-3"	4'-0"	4'-0"	BOTH	45°-00'	6'-8¾"	1'-9¼"	1'-0"	8	4	6'-11"	3'-5"	10'-4"	11¾	79	4.72
				75°	4'-4¾"	4'-2¼"	4'-0½"	LONG	37°-30'	7'-11¼"	2'-2¼"	1'-0"	5	2	8'-1"	3'-6"	11'-7"	15	84	4.85
								SHORT	52°-30'	5'-10¾"	1'-5¾"	1'-0"	4	2	6'-2"	3'-7"	9'-9"	9		
				60°	4'-11"	4'-8¼"	4'-3¾"	LONG	30°-00'	9'-9¼"	2'-9¼"	1'-0"	6	2	9'-10"	3'-9"	13'-7"	19¾	89	5.29
								SHORT	60°-00'	5'-3½"	1'-3"	1'-0"	3	2	5'-6"	3'-10"	9'-6"	6¾		
				45°	6'-0¼"	5'-8¾"	4'-11"	LONG	22°-30'	12'-10¾"	3'-9"	1'-0"	8	2	12'-11"	4'-4"	17'-3"	27	105	6.25
								SHORT	67°-30'	4'-10¼"	1'-0¾"	1'-0"	3	2	5'-3"	4'-5"	9'-8"	5		
48"	2'-9"	2'-0"	1'-3"	90°	4'-10"	4'-5½"	4'-5½"	BOTH	45°-00'	7'-5¼"	1'-9¼"	1'-0"	10	4	7'-8"	3'-9"	11'-5"	11¾	90	5.88
				75°	5'-0"	4'-8¼"	4'-5¾"	LONG	37°-30'	8'-9"	2'-2¼"	1'-0"	6	2	8'-11"	3'-9"	12'-8"	15	92	6.05
								SHORT	52°-30'	6'-6¼"	1'-5¾"	1'-0"	4	2	6'-10"	3'-10"	10'-8"	9		
				60°	5'-7"	5'-3"	4'-9¼"	LONG	30°-00'	10'-9¼"	2'-9¼"	1'-0"	7	2	10'-11"	4'-1"	15'-0"	19¾	100	6.60
								SHORT	60°-00'	5'-10½"	1'-3"	1'-0"	4	2	6'-3"	4'-2"	10'-5"	6¾		
				45°	6'-10"	6'-5¼"	5'-5½"	LONG	22°-30'	14'-2½"	3'-9"	1'-0"	9	2	14'-3"	4'-9"	19'-0"	27	117	7.80
								SHORT	67°-30'	5'-4¾"	1'-0¾"	1'-0"	4	2	5'-10"	4'-10"	10'-8"	5		
54"	2'-9"	2'-0"	1'-3"	90°	5'-5"	4'-11"	4'-11"	BOTH	45°-00'	8'-10¼"	1'-9¼"	1'-0"	12	2	9'-2"	4'-0"	13'-2"	11¾	105	7.26
				75°	5'-7¼"	5'-2"	4'-11¼"	LONG	37°-30'	10'-4¼"	2'-2¼"	1'-0"	7	2	10'-8"	4'-1"	14'-9"	15	108	7.46
								SHORT	52°-30'	7'-9¼"	1'-5¾"	1'-0"	5	2	8'-2"	4'-2"	12'-4"	9		
				60°	6'-3"	5'-9¾"	5'-3"	LONG	30°-00'	12'-9¼"	2'-9¼"	1'-0"	8	2	12'-11"	4'-5"	17'-4"	19¾	114	8.13
								SHORT	60°-00'	7'-0¼"	1'-3"	1'-0"	4	2	7'-6"	4'-6"	12'-0"	6¾		
				45°	7'-8"	7'-1¾"	6'-0"	LONG	22°-30'	16'-9¾"	3'-9"	1'-0"	11	2	16'-11"	5'-2"	22'-1"	27	136	9.60
								SHORT	67°-30'	6'-5¾"	1'-0¾"	1'-0"	4	2	7'-0"	5'-3"	12'-3"	5		
60"	3'-0"	2'-0"	1'-6"	90°	6'-0"	5'-4½"	5'-4½"	BOTH	45°-00'	10'-3¼"	1'-9¼"	1'-0"	14	4	10'-8"	4'-4"	15'-0"	11¾	120	9.07
				75°	6'-2½"	5'-8"	5'-4½"	LONG	37°-30'	12'-0½"	2'-2¼"	1'-0"	8	2	12'-4"	4'-5"	16'-9"	15	123	9.33
								SHORT	52°-30'	9'-0½"	1'-5¾"	1'-0"	6	2	9'-7"	4'-6"	14'-1"	9		
				60°	6'-11¼"	6'-4½"	5'-8¾"	LONG	30°-00'	14'-9¼"	2'-9¼"	1'-0"	9	2	15'-0"	4'-9"	19'-9"	19¾	130	10.17
								SHORT	60°-00'	8'-2¼"	1'-3"	1'-0"	5	2	8'-9"	4'-10"	13'-7"	6¾		
				45°	8'-5¾"	7'-10¼"	6'-6½"	LONG	22°-30'	19'-5¼"	3'-9"	1'-0"	12	2	19'-7"	5'-6"	23'-1"	27	152	12.00
								SHORT	67°-30'	7'-6¾"	1'-0¾"	1'-0"	5	2	7'-6"	5'-8"	13'-2"	5		
66"	3'-3"	2'-0"	1'-6"	90°	6'-7"	5'-10"	5'-10"	BOTH	45°-00'	11'-8¼"	1'-9¼"	1'-0"	24	4	11'-5"	4'-8"	16'-1"	11¾	153	11.41
				75°	7'-0"	6'-3"	5'-11¼"	LONG	37°-30'	13'-8¼"	2'-2¼"	1'-0"	14	2	13'-5"	4'-10"	18'-3"	15	158	11.74
								SHORT	52°-30'	10'-3¾"	1'-5¾"	1'-0"	11	2	10'-0"	4'-11"	14'-11"	9		
				60°	7'-9¾"	7'-0¾"	6'-3¾"	LONG	30°-30'	16'-9½"	2'-9¼"	1'-0"	17	2	16'-6"	5'-9"	21'-9"	19¾	169	12.82
								SHORT	60°-00'	9'-4"	1'-3"	1'-0"	9	2	9'-1"	5'-4"	14'-5"	6¾		
				45°	9'-6¾"	8'-8¼"	7'-2¼"	LONG	22°-30'	22'-0½"	3'-9"	1'-0"	22	2	21'-9"	6'-2"	27'-11"	27	198	16.60
								SHORT	67°-30'	8'-8"	1'-0¾"	1'-0"	8	2	8'-3"	6'-3"	14'-6"	5		
66"	3'-3"	2'-0"	1'-6"	35°	11'-5⅝"	10'-6¾"	8'-1½"	LONG	47°-30'	28'-1¾"	4'-9"	1'-0"	28	2	27'-9"	6'-6"	34'-3"	35	225	18.00
								SHORT	72°-30'	8'-3⅝"	1'-0"	1'-0"	8	2	8'-2"	6'-8"	14'-10"	4		
72"	3'-6"	2'-0"	2'-0"	90°	7'-2"	6'-3"	6'-3"	BOTH	45°-00'	13'-1"	1'-9¼"	1'-0"	18	4	13'-7"	5'-0"	18'-7"	11¾	151	13.55
				75°	7'-5"	6'-7¾"	6'-3½"	LONG	37°-30'	15'-4"	2'-2¼"	1'-0"	10	2	15'-9"	5'-3"	21'-0"	15	153	13.90
								SHORT	52°-30'	11'-6¾"	1'-5¾"	1'-0"	7	2	12'-2"	5'-4"	17'-6"	9		
				60°	8'-3¼"	7'-6"	6'-8"	LONG	30°-00'	18'-9¼"	2'-9¼"	1'-0"	12	2	19'-0"	5'-10"	24'-10"	19¾	167	14.94
								SHORT	60°-00'	10'-5¾"	1'-3"	1'-0"	7	2	11'-2"	5'-11"	17'-1"	6¾		
				45°	10'-1¾"	9'-3¼"	7'-7½"	LONG	22°-30'	24'-7¾"	3'-9"	1'-0"	16	2	24'-10"	7'-1"	31'-11"	27	196	17.28
								SHORT	67°-30'	9'-8¾"	1'-0¾"	1'-0"	6	2	10'-5"	7'-2"	17'-9"	5		
78"	3'-9"	2'-0"	2'-0"	90°	7'-9"	6'-8¾"	6'-8¾"	BOTH	45°-00'	14'-6"	1'-9¼"	1'-0"	18	4	15'-5"	5'-6"	20'-7"	11¾	163	15.70
				75°	8'-0¼"	7'-1¾"	6'-8¾"	LONG	37°-30'	16'-11¾"	2'-2¼"	1'-0"	11	2	17'-6"	5'-8"	23'-2"	15	169	16.00
								SHORT	52°-30'	12'-10"	1'-5¾"	1'-0"	8	2	13'-6"	5'-9"	19'-3"	9		
				60°	8'-11½"	8'-1"	7'-1¾"	LONG	30°-00'	20'-9¼"	2'-9¼"	1'-0"	13	2	21'-2"	6'-4"	27'-6"	19¾	182	17.57
								SHORT	60°-00'	11'-7¾"	1'-3"	1'-0"	7	2	12'-4"	6'-5"	18'-9"	6¾		
				45°	10'-1½"	9'-11½"	8'-2"	LONG	22°-30'	27'-3¼"	3'-9"	1'-0"	18	2	26'-5"	7'-9"	34'-2"	27	215	20.63
								SHORT	67°-30'	10'-9¾"	1'-0¾"	1'-0"	7	2	11'-7"	7'-10"	19'-5"	5		

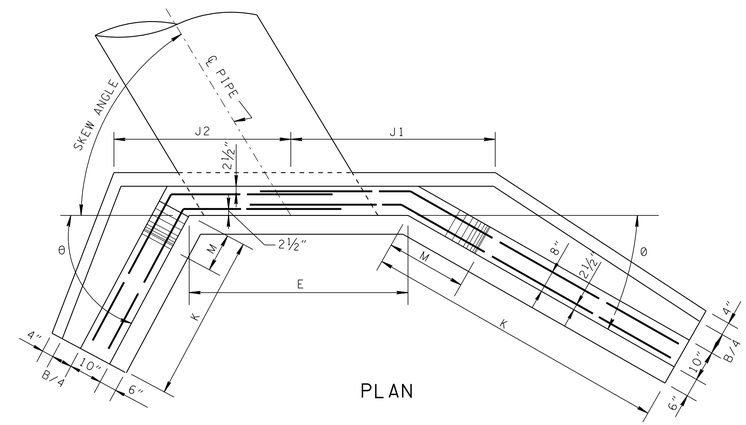

PLAN

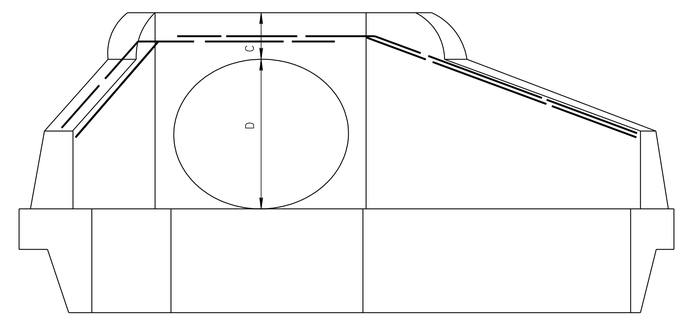

ELEVATION

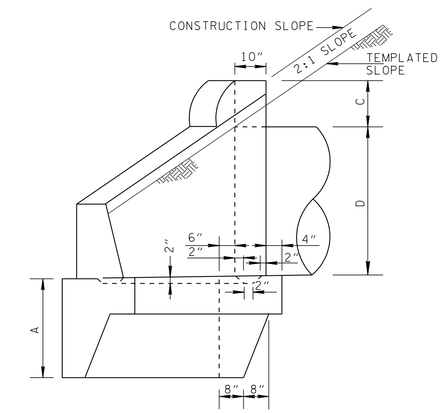

END VIEW

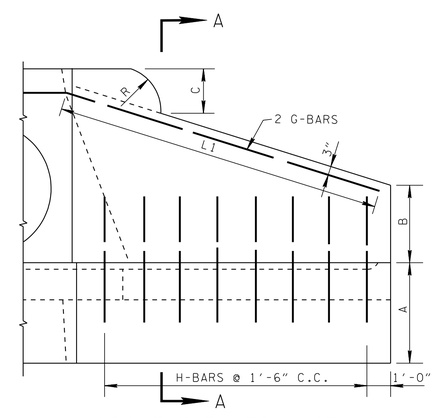

FRONT ELEVATION OF WING

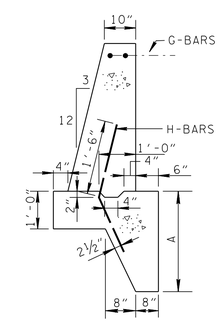

SECTION A-A

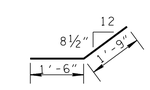

H-BARS

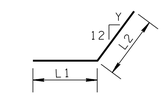

G-BARS

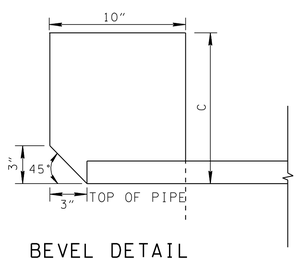

BEVEL DETAIL

SHOWING BEVEL REQUIRED ON ENDWALLS WHEN PLANS REQUIRE ENDWALLS TO BE CONSTRUCTED AT 90° TO THE ℄ OF PIPE.
BEVEL NOT REQUIRED WHEN ENDWALL IS CONSTRUCTED ON THE "BELLED" END OF CONCRETE PIPE.

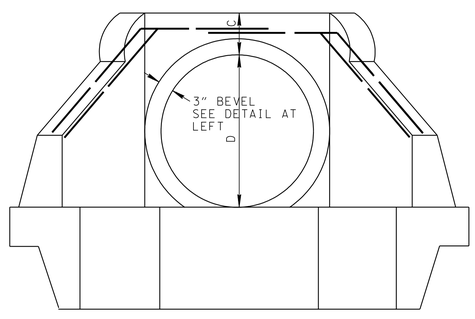

ELEVATION - E.W. AT 90°

GENERAL NOTE:
ON CONSTRUCTION CONTRACTOR WILL BE REQUIRED TO WIDEN FILL OR FLATTEN SLOPE OF FILL TO CATCH THE TOP OF THE ENDWALL AS SHOWN BY "CONSTRUCTION SLOPE".

☐ MINOR REVISION -- FHWA APPROVAL NOT REQUIRED.

STATE OF TENNESSEE
DEPARTMENT OF TRANSPORTATION

TYPE "A"
CONCRETE
ENDWALL

2:1 SLOPE, 36" TO 78"

D-PE-1