STD176.DGN

CONST. NO.		
PROJECT NO.	YEAR	SHEET NO.
	2010	

REVISIONS

NO.	DATE	BY	BRIEF DESCRIPTION

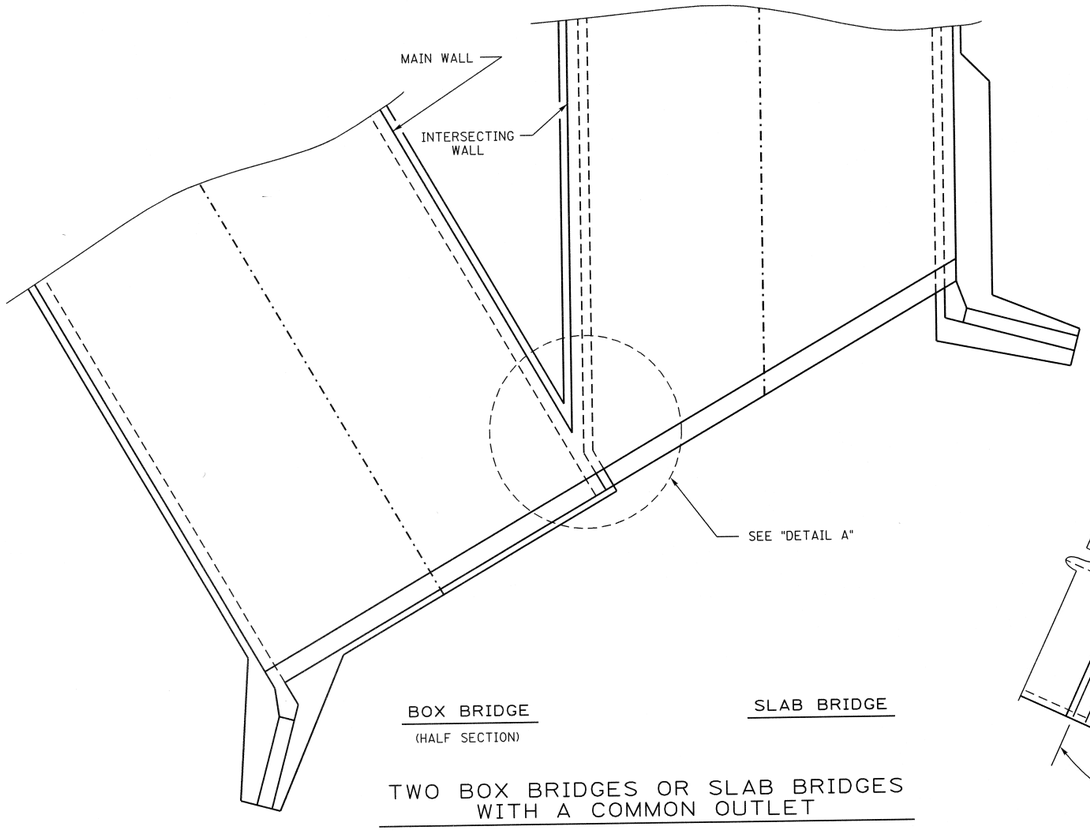

BOX BRIDGE

(HALF SECTION)

SLAB BRIDGE

TWO BOX BRIDGES OR SLAB BRIDGES WITH A COMMON OUTLET

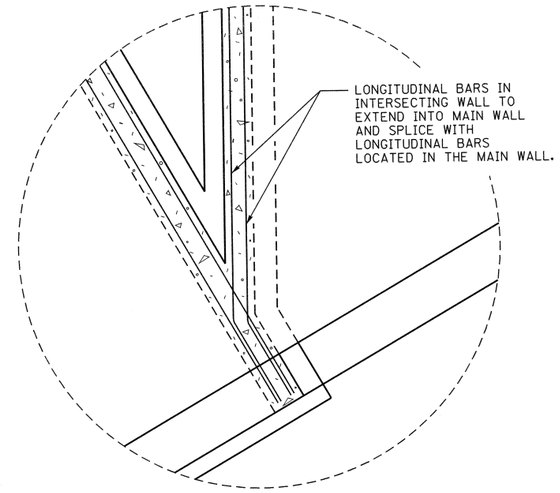

DETAIL A

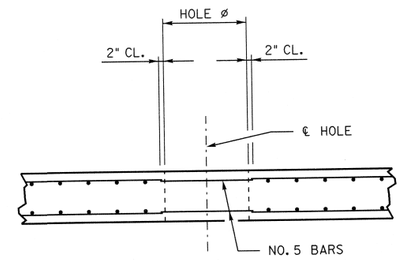

SECTION "J-J"

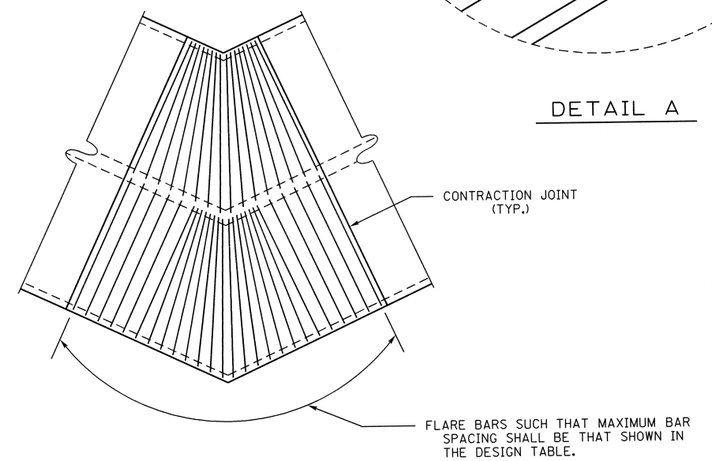

CHANGE IN DIRECTION DETAIL

(2 BARREL SHOWN; OTHER BARRELS ARE SIMILAR)

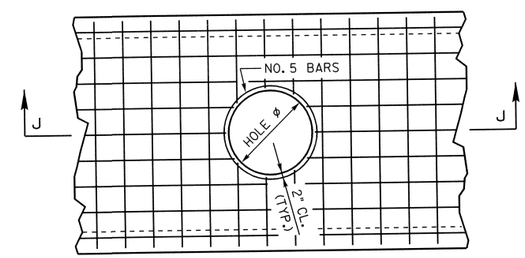

TYPICAL DETAIL FOR MANHOLES THROUGH TOP SLAB OR WALL

NOTE: THE HOLE FOR MANHOLES SHALL BE CAST IN the SLAB OR WALL.

△ DENOTES DIM. OF SIDEWALK MAY VARY BASED ON THE THICKNESS OF THE SLAB (ST).

⊠ DENOTES THE FOLLOWING BAR SIZES:
BARS A800E (90° SKEW)
BARS A800E (75° SKEW)
BARS A900E (60° SKEW)
BARS A1100E (45° SKEW)

◑ DENOTES THE FOLLOWING BAR SIZES:
BARS A800 (90° SKEW)
BARS A800 (75° SKEW)
BARS A900 (60° SKEW)
BARS A1100 (45° SKEW)

▼ NOTE: WHEN POURING ST, PROVISION SHALL BE MADE FOR SETTING REINFORCING STEEL FOR PARAPET. NO PORTION OF THE PARAPET SHALL BE POURED UNTIL THE ENTIRE ST AND SIDEWALKS ARE POURED AND CURED. ALL PARAPET REINFORCEMENT SHALL MAINTAIN 2" CL. TO INLET END CHAMFER.

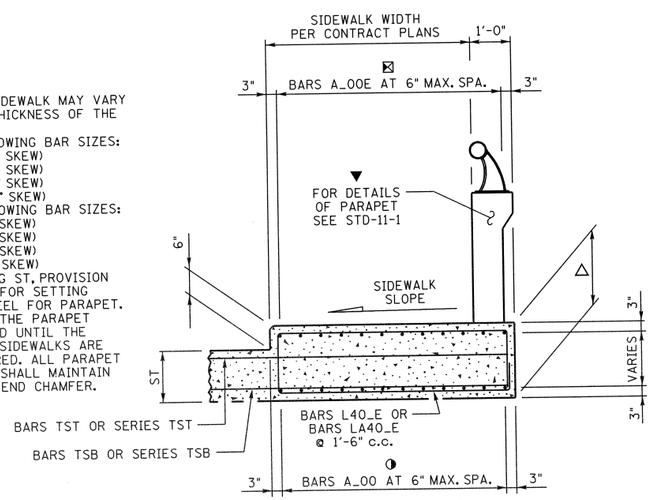

NOTE: BARS LNT OR LND NOT SHOWN.

SIDEWALK DETAIL

(OUTLET END SIDEWALK SHOWN)
(INLET END SIDEWALK SIMILAR)

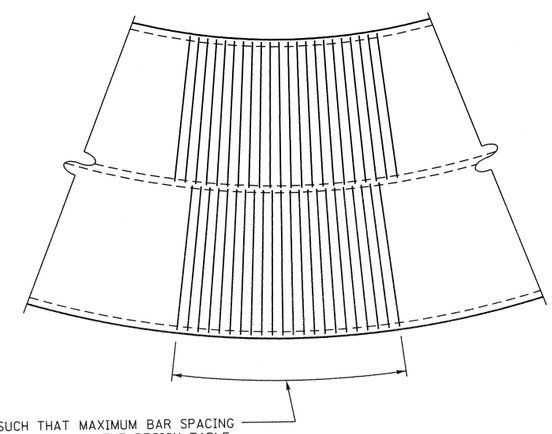

CURVED BOX DETAIL

(2 BARREL SHOWN; OTHER BARRELS ARE SIMILAR)

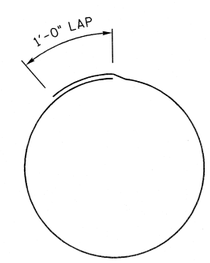

NO. 5 BARS

(AROUND MANHOLE)

STATE OF TENNESSEE
DEPARTMENT OF TRANSPORTATION

SIDEWALK AND MISCELLANEOUS DETAILS

STANDARD REINFORCED CONCRETE BRIDGE BOX AND SLAB TYPE

2010

CORRECT Edward P. Wasserman
ENGINEER OF STRUCTURES

DESIGNED BY	CMH / MAH	DATE 12-09
DRAWN BY	DIANE BUSH	DATE 04-10
SUPERVISED BY	RLH / JWP / MAH	DATE 12-09
CHECKED BY		DATE

D:\dgn\stds\std176.dgn
29-JUL-2010
15:00

STD-17-23