PROJECT NO.	YEAR	SHEET NO.
82003-4255-04	2000	

REVISIONS

NO.	DATE	BY	BRIEF DESCRIPTION

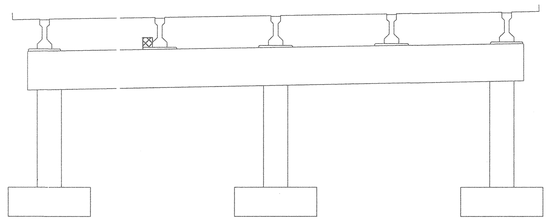

DIAPHRAGM AT PIER NO. 1 (LT)
LOOKING AHEAD

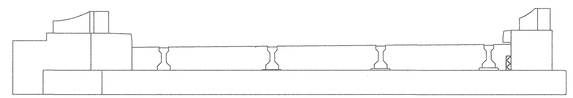

DIAPHRAGM AT ABUTMENT NO. 1 (RT)
LOOKING BACK

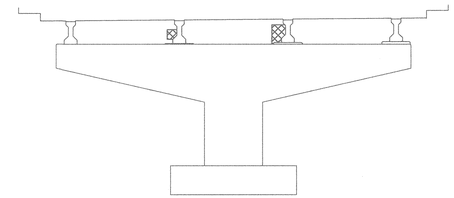

DIAPHRAGM AT BENT NO. 1 (RT)
LOOKING BACK

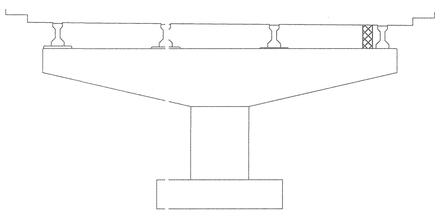

DIAPHRAGM AT BENT NO. 2 (RT)
LOOKING AHEAD

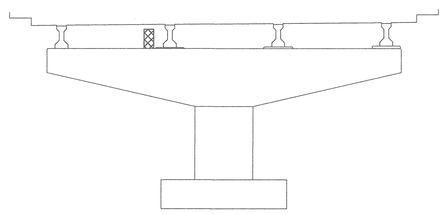

DIAPHRAGM AT BENT NO. 2 (RT)
LOOKING BACK

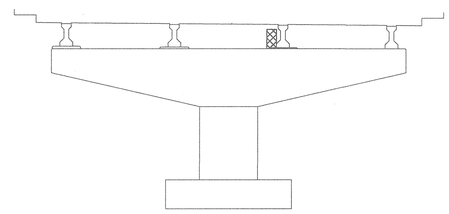

DIAPHRAGM AT BENT NO. 3 (RT)
LOOKING AHEAD

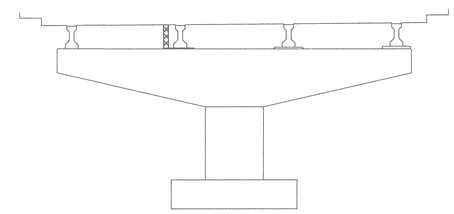

DIAPHRAGM AT BENT NO. 3 (RT)
LOOKING BACK

DENOTES APPROXIMATE LOCATION OF DIAPHRAGM REPAIRS. SEE REPAIR DETAILS ON DWG. NO. BR-46-83. TO BE PAID FOR UNDER ITEM NOS. 604-10.05 AND/OR 604-10.54.

ESTIMATED DIAPHRAGM REPAIR

LOCATION OF REPAIR	APPROX. SPALLED CONCRETE REPAIR AREAS, S.F.
AT PIER NO. 1 (LT.)	1
AT ABUTMENT NO. 1 (RT.)	1
AT BENT NO. 1 (RT.)	3
AT BENT NO. 2 (RT.)	5
AT BENT NO. 3 (RT.)	4
TOTAL	14

STATE OF TENNESSEE
DEPARTMENT OF TRANSPORTATION

GARY S. HENDERSON
REGISTERED ENGINEER
AGRICULTURE
AND
FORESTRY
No. 101669
STATE OF TENNESSEE

SUPERSTRUCTURE REPAIR DETAILS
BRIDGE NO. 82-SR34-12.58
STATE ROUTE 34 OVER
BEAVER CREEK
SULLIVAN COUNTY
2000

Palmer ENGINEERING

DESIGNED BY	R. HARPER	DATE	5/00
DRAWN BY	D.A. HUNT	DATE	5/00
SUPERVISED BY	G.S. HENDERSON	DATE	5/00
CHECKED BY	G.S. HENDERSON	DATE	5/00

SU3483BM.DGN

BR-46-92

PROJECT NO.	YEAR	SHEET NO.
19006-4120-04	2000	

REVISIONS

NO.	DATE	BY	BRIEF DESCRIPTION
1	6-13-00	WS	REVISED LIST OF DRAWINGS

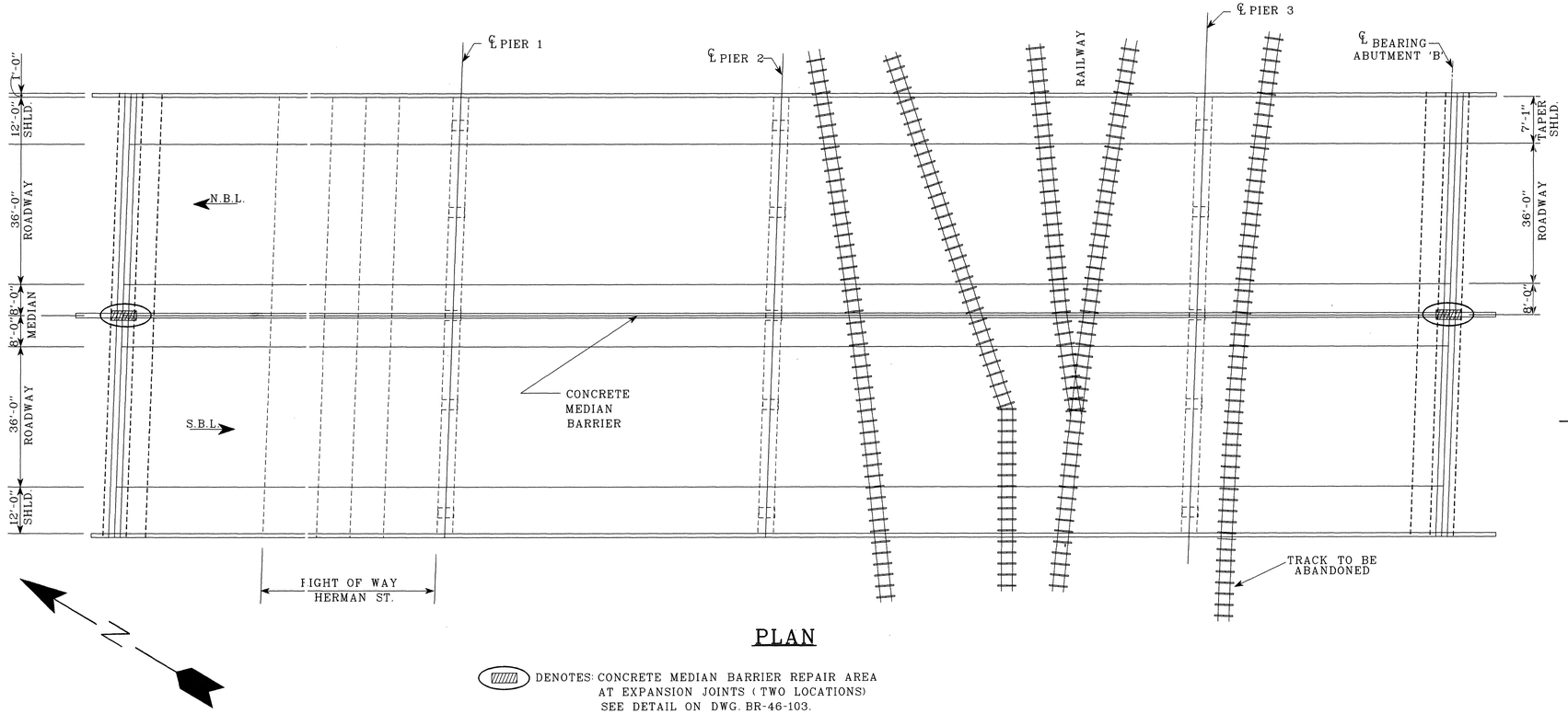

PLAN

DENOTES: CONCRETE MEDIAN BARRIER REPAIR AREA AT EXPANSION JOINTS (TWO LOCATIONS) SEE DETAIL ON DWG. BR-46-103.

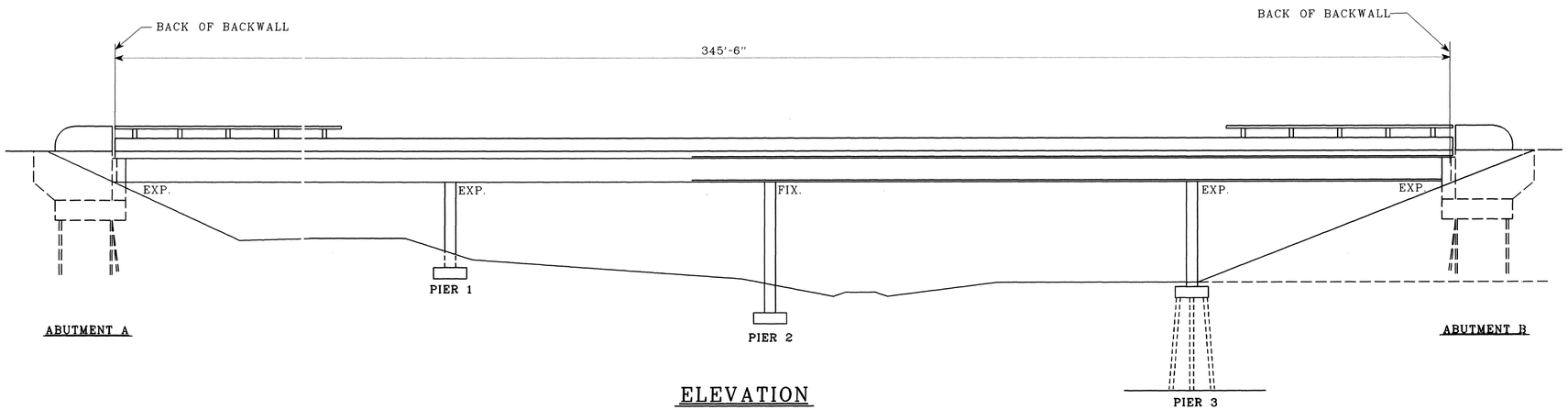

ELEVATION

GENERAL SCOPE OF WORK

1) REMOVE AND REPOUR THE CONCRETE MEDIAN BARRIER AT EXPANSION JOINTS AT BOTH ABUTMENTS. (4'-0" @ EACH ABUTMENT) FORM A 2" JOINT TO LINE UP WITH THE EXISTING EXPANSION JOINT. FOR DETAILS SEE DRAWING NO. BR-46-103 AND K-80-48.

2) REPLACE APPROACH GUARDRAIL SECTION ATTACHED TO BRIDGE END POSTS.

LIST OF DRAWINGS

DRAWING NO.	LAST REV. DATE	DRAWING
BR-46-93	6-13-00	LAYOUT OF BRIDGE TO BE REPAIRED
BR-46-100	6-13-00	ESTIMATED QUANTITIES
BR-46-101		GENERAL NOTES
BR-46-103		BRIDGE REPAIR DETAILS

LIST OF REFERENCE DRAWINGS

(TO BE PRINTED WITH PLANS)

DRAWING NO.	DRAWING
K-80-5	EXISTING BRIDGE DRAWNGS
K-80-48	EXISTING BRIDGE DRAWNGS

LIST OF SPECIAL PROVISIONS

NO.	LAST REV. DATE	REGARDING
108B	**	PROJECT COMPLETION AND INCENTIVE/DISINCENTIVE

** DENOTES: CURRENT REVISION DATE, AS PER CONTRACT DOCUMENTS.

LIST OF STANDARD DRAWINGS

DRAWING NO.	LAST REV. DATE	DRAWING
SBR-2-131,132	1-4-96	GUARDRAIL ATTACHMENT AT BRIDGE ENDS

STATE OF TENNESSEE
DEPARTMENT OF TRANSPORTATION

LAYOUT OF BRIDGE TO BE REPAIRED
I-40/HERMAN ST. & RAILROAD
BRIDGE NO. 19-I40-16.60
DAVIDSON COUNTY
2000

DESIGNED BY Terry Mackie DATE May 2000
DRAWN BY Sher'ryl McAdoo DATE May 2000
SUPERVISED BY T.Christianson/W.Seger DATE May 2000
CHECKED BY Terry Mackie/Wanye Seger DATE

BR-46-93

PROJECT NO.	YEAR	SHEET NO.
19006-4120-04	2000	

REVISIONS

NO.	DATE	BY	BRIEF DESCRIPTION
1	6-13-00	WS	REVISED LIST OF DRAWINGS

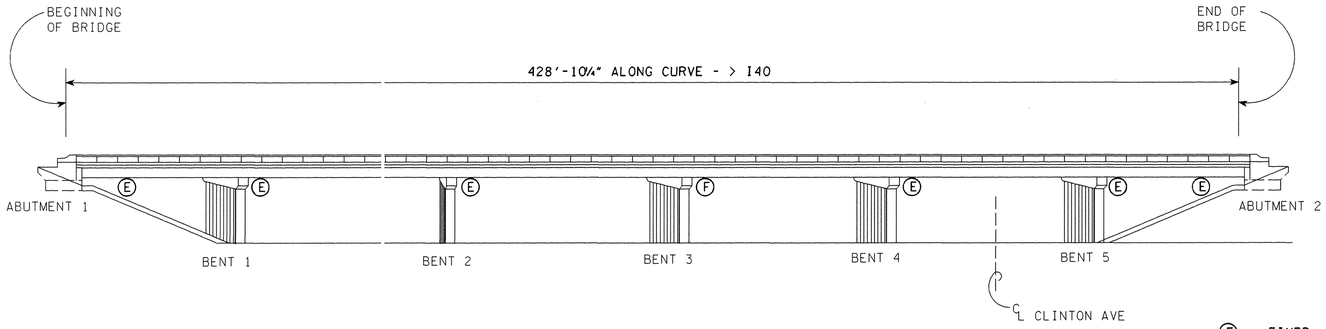

(F) = FIXED
(E) = EXPANSION

ELEVATION

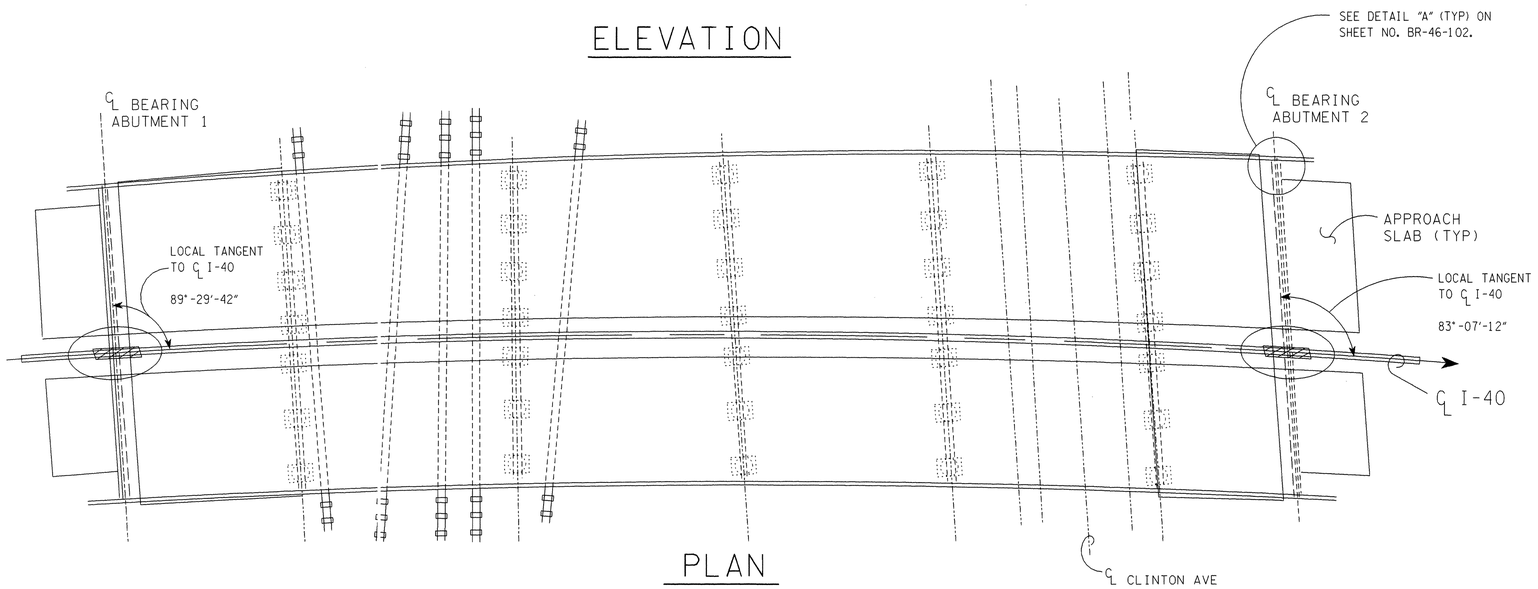

PLAN

① LIST OF DRAWINGS

DRAWING NO.	LAST REV. DATE	DRAWING
BR-46-94	6-13-00	LAYOUT OF BRIDGE TO BE REPAIRED
BR-46-100	6-13-00	ESTIMATED QUANTITIES AND GENERAL NOTES
BR-46-101		ESTIMATED QUANTITIES AND GENERAL NOTES
BR-46-95		PHASE CONSTRUCTION DETAILS
BR-46-102		BRIDGE REPAIR DETAILS
BR-46-103		BRIDGE REPAIR DETAILS

LIST OF REFERENCE DRAWINGS

(TO BE PRINTED WITH PLANS)

DRAWING NO.	DRAWING
K-80-16 THRU 26	EXISTING BRIDGE DRAWINGS
K-80-48	EXISTING BRIDGE DRAWING

LIST OF STANDARD DRAWINGS

DRAWING NO.	LAST REV. DATE	DRAWING
STD-9-1	12-19-94	REINFORCING BAR SUPPORT DETAILS FOR CONCRETE SLABS
S-GR-23	9-5-98	GUARDRAIL ATTACHMENTS TO STRUCTURES
SBR-2-115	1-4-96	GENERAL NOTES AND DETAILS FOR EXPANSION JOINT REPLACEMENT CONSTRUCTION TYPES "A" THRU "J"
SBR-2-116	1-4-96	GENERAL DETAILS FOR STRIP SEAL EXPANSION JOINT REPLACEMENT CONSTRUCTION DETAILS TYPES "A" THRU "J"
SBR-2-117	1-4-96	STRIP SEAL EXPANSION JOINTS-REPLACEMENT CONSTRUCTION DETAILS TYPE "A" AND TYPE "B"
SBR-2-133, 134	5-21-99	GUARDRAIL ATTACHMENT AT BRIDGE ENDS

DENOTES: REMOVE AND REPLACE THE EXISTING CONCRETE MEDIAN BARRIER AT THE EXPANSION JOINTS FOR EACH ABUTMENT. ALSO FORM A 2" JOINT IN THE CONCRETE MEDIAN BARRIER FOR EXPANSION. FOR DETAILS AND NOTES, SEE DRAWING NO. BR-46-103 AND K-80-48.

GENERAL SCOPE OF WORK

1) SCARIFY 3" TO 4" OF EXISTING ASPHALT OVERLAY.
2) RECONSTRUCT THE CONCRETE SLAB IN AREAS OF PARTIAL AND FULL DEPTH DECK REPAIR WITH HIGH EARLY STRENGTH CONCRETE.
3) PLACE NEW 2" RUBBERIZED ASPHALT OVERLAY.
4) REMOVE 4'-0" OF EXISTING CONCRETE MEDIAN BARRIER AT EACH ABUTMENT FOR INSTALLATION OF NEW STRIPSEAL.
5) REMOVE EXISTING EXPANSION JOINTS AND REPLACE WITH NEW STRIP SEAL EXPANSION JOINTS (TYPE A).
6) APPLY NON-PENETRATING CONCRETE SEALER TO ABUTMENTS.
7) HAND TOOL CLEAN AND PAINT THE EXISTING ABUTMENT BEARINGS.
8) REMOVE GUARDRAIL AT BRIDGE ENDS AND REPLACE WITH NEW SECTION WITH RUBRAILS.
9) MAINTAIN TRAFFIC WITH PHASING.

LIST OF SPECIAL PROVISIONS

** DENOTES: CURRENT REVISION DATE, AS PER CONTRACT DOCUMENTS.

NO.	LAST REV. DATE	REGARDING
105A	**	APPROVAL OF SHOP DRAWINGS
108B	**	PROJECTION COMPLETION AND INCENTIVE / DISINCENTIVE
604CR	**	BRIDGE DECK CRACK SEALING
604S	**	STRIPSEAL EXPANSION JOINTS

STATE OF TENNESSEE
DEPARTMENT OF TRANSPORTATION

LAYOUT OF BRIDGE TO BE REPAIRED
INTERSTATE 40 OVER
C.S.X. R.R. AND CLINTON ST
BRIDGE NO. 19-I40-16.73
DAVIDSON COUNTY
2000

DESIGNED BY	TERRY MACKIE	DATE	05/2000
DRAWN BY	SCOTT C. NELSON	DATE	05/2000
SUPERVISED BY	W.SEGER & T.CHRISTIANSON	DATE	05/2000
CHECKED BY	W.SEGER & T.MACKIE	DATE	05/2000

PROJECT NO.	YEAR	SHEET NO.
19006-4120-04	2000	

REVISIONS

NO.	DATE	BY	BRIEF DESCRIPTION

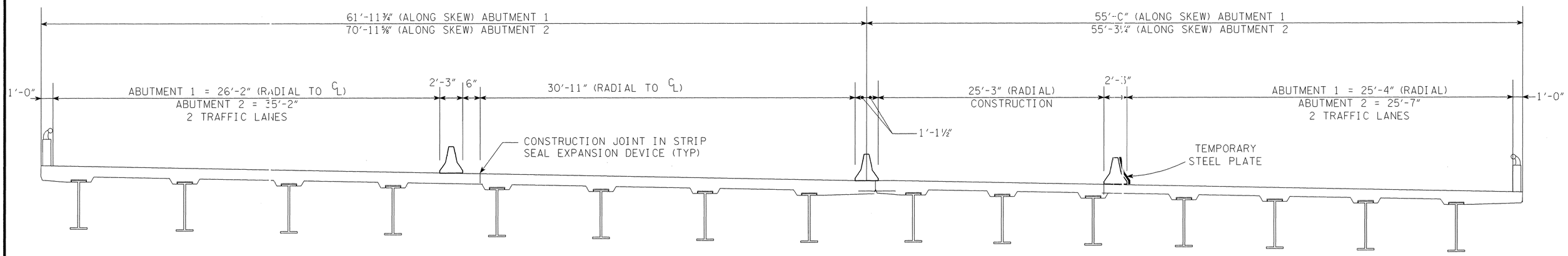

PHASE I CONSTRUCTION
(LOOKING SOUTH)

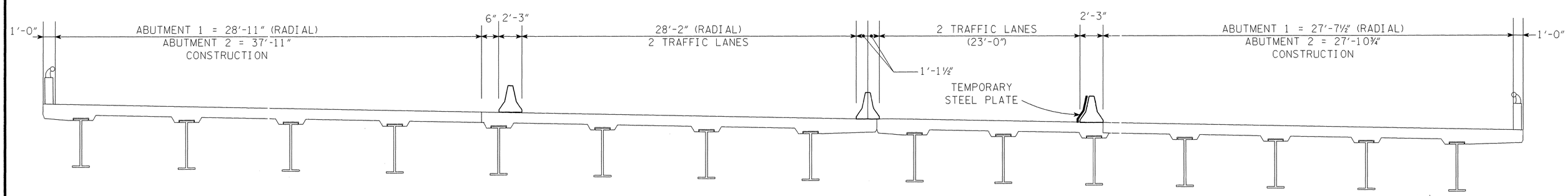

PHASE II CONSTRUCTION
(LOOKING SOUTH)

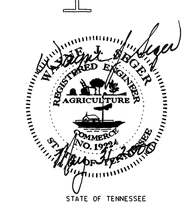

STATE OF TENNESSEE
DEPARTMENT OF TRANSPORTATION

CONSTRUCTION PHASING
INTERSTATE 40 OVER
C.S.X. R.R. AND CLINTON ST
BRIDGE NO. 19-I40-16.73
DAVIDSON COUNTY
2000

DESIGNED BY	TERRY MACKIE	DATE	05/2000
DRAWN BY	SCOTT C. NELSON	DATE	05/2000
SUPERVISED BY	W.SEGER & T.CHRISTIANSON	DATE	05/2000
CHECKED BY	W.SEGER & T.MACKIE	DATE	05/2000

BR-46-95

PROJECT NO.	YEAR	SHEET NO.
19006-4120-04	2000	

REVISIONS

NO.	DATE	BY	BRIEF DESCRIPTION
1	6-13-00	WG	REVISED LIST OF DRAWINGS

NOTE: SECTION "A-A" IS TYPICAL BOTH BRIDGE ENDS (NBL & SBL). SECTION "B-B" IS TYPICAL FOR ALL APPROACH SHOULDERS BOTH ENDS (NBL & SBL). FOR DETAILS OF SECTIONS, SEE DRAWING NO. BR-46-104.

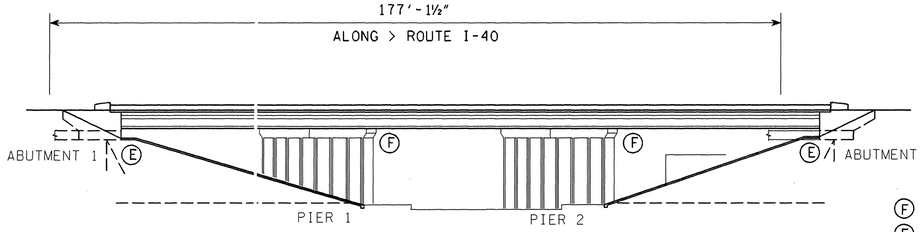

ELEVATION

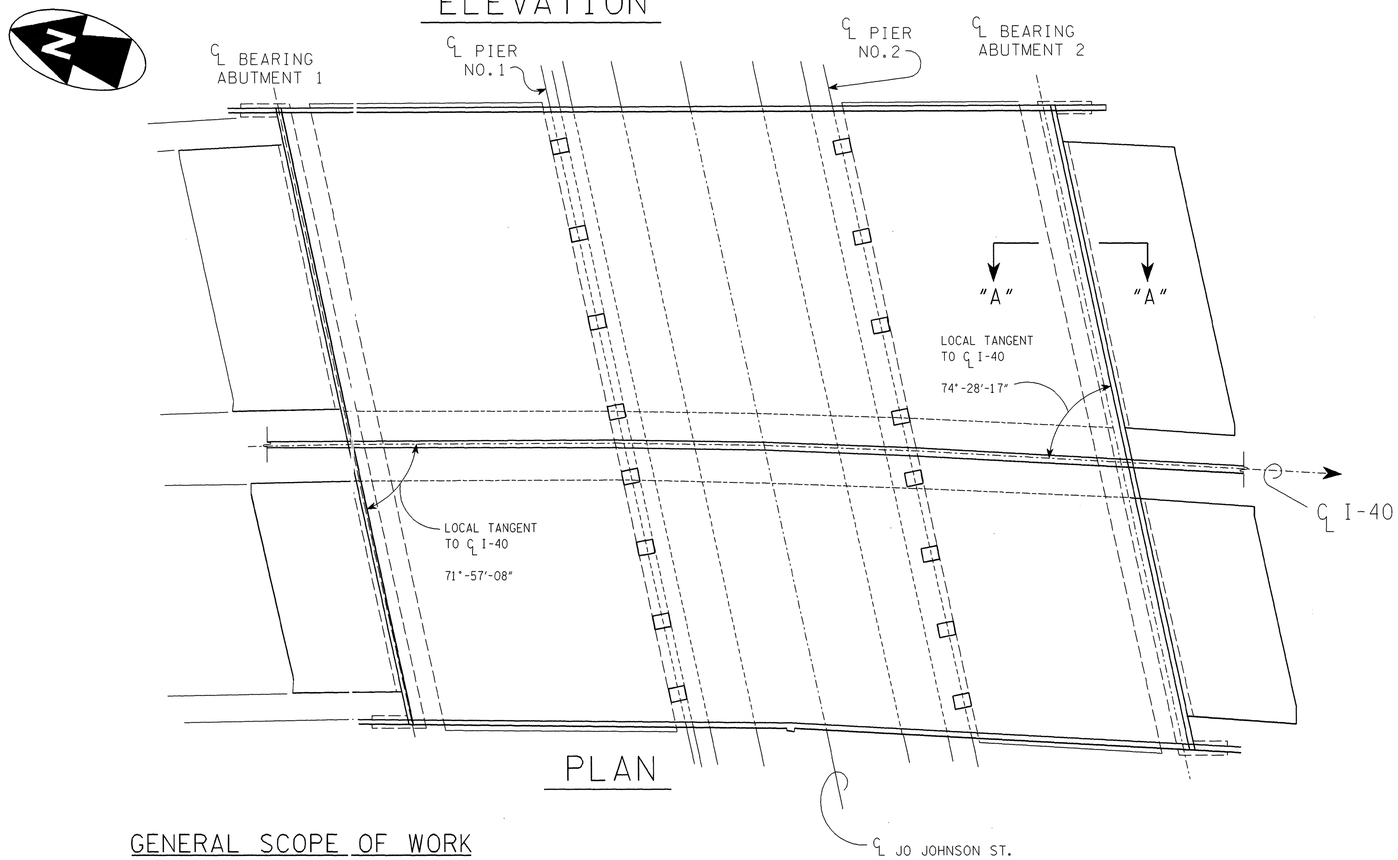

PLAN

GENERAL SCOPE OF WORK

1) SCARIFY 3" TO 4" OF EXISTING ASPHALT OVERLAY.
2) RECONSTRUCT THE CONCRETE SLAB IN AREAS OF PARTIAL AND FULL DEPTH DECK REPAIR WITH HIGH EARLY STRENGTH CONCRETE.
3) PLACE NEW 2" RUBBERIZED ASPHALT OVERLAY.
4) PLACE A SILICONE JOINT BETWEEN THE END OF BRIDGE AND THE EXISTING APPROACH SLAB. SEE DRAWING BR-46-104 FOR DETAILS.
5) REMOVE GUARDRAIL AT BRIDGE ENDS AND REPLACE WITH NEW SECTION WITH RUBRAILS.
6) MAINTAIN TRAFFIC WITH PHASING.

LIST OF DRAWINGS

DRAWING NO.	LAST REV. DATE	DRAWING
BR-46-96	6-13-00	LAYOUT OF BRIDGE TO BE REPAIRED
BR-46-100	6-13-00	ESTIMATED QUANTITIES AND GENERAL NOTES
BR-46-101		ESTIMATED QUANTITIES AND GENERAL NOTES
BR-46-92		PHASE CONSTRUCTION DETAILS
BR-46-104		BRIDGE REPAIR DETAILS

LIST OF REFERENCE DRAWINGS

(TO BE PRINTED WITH PLANS)

DRAWING NO.	DRAWING
K-80-29 THRU 36	EXISTING BRIDGE DRAWINGS
K-80-48	EXISTING BRIDGE DRAWINGS

LIST OF STANDARD DRAWINGS

DRAWING NO.	LAST REV. DATE	DRAWING
SBR-2-133	1-4-96	GUARDRAIL ATTACHMENTS TO BRIDGE ENDS
SBR-2-134	1-4-96	GUARDRAIL ATTACHMENTS TO BRIDGE ENDS

LIST OF SPECIAL PROVISIONS

** DENOTES: CURRENT REVISION DATE, AS PER CONTRACT DOCUMENTS.

NO.		LAST REV. DATE	REGARDING
105A	**		APPROVAL OF SHOP DRAWINGS
108B	**		PROJECTION COMPLETION AND INCENTIVE / DISINCENTIVE
609CR	**		BRIDGE DECK CRACK SEALING

WAYNE I. SEGER
REGISTERED ENGINEER
AGRICULTURE
CHEMICAL
No. 19924
STATE OF TENNESSEE

STATE OF TENNESSEE
DEPARTMENT OF TRANSPORTATION

LAYOUT OF BRIDGE TO BE REPAIRED
INTERSTATE 40 OVER
JO JOHNSON ST
BRIDGE NO. 19-I40-16.86
DAVIDSON COUNTY
2000

DESIGNED BY	TERRY MACKIE	DATE	05/2000
DRAWN BY	SCOTT C. NELSON	DATE	05/2000
SUPERVISED BY	W.SEGER & T.CHRISTIANSON	DATE	05/2000
CHECKED BY	W.SEGER & T.MACKIE	DATE	05/2000

BR-46-96

PROJECT NO.	YEAR	SHEET NO.
19006-4120-04	2000	

REVISIONS

NO.	DATE	BY	BRIEF DESCRIPTION

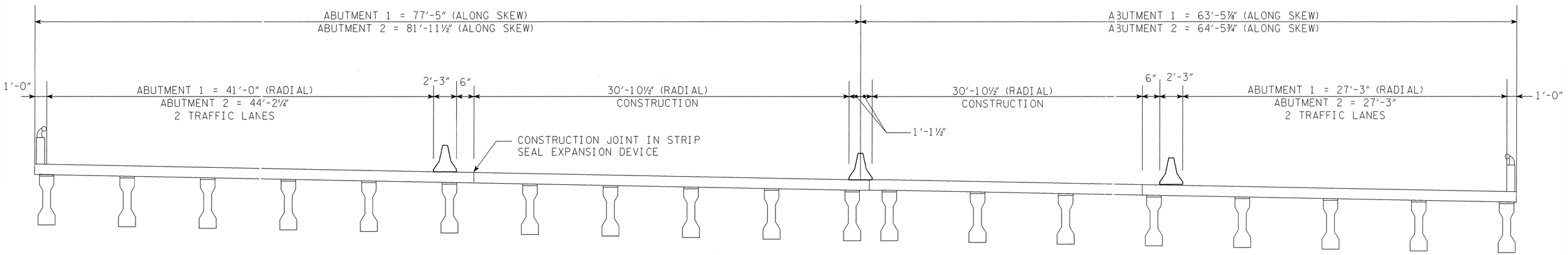

PHASE I CONSTRUCTION
(LOOKING SOUTH)

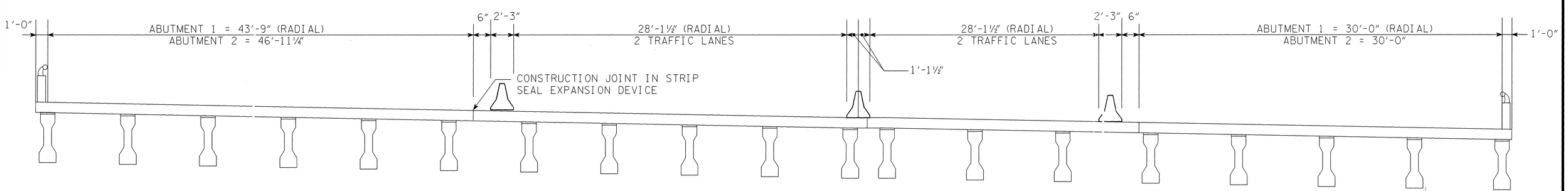

PHASE II CONSTRUCTION
(LOOKING SOUTH)

STATE OF TENNESSEE
DEPARTMENT OF TRANSPORTATION

CONSTRUCTION PHASING
INTERSTATE 40 OVER
JO JOHNSON ST
BRIDGE NO. 19-I40-16.86
DAVIDSON COUNTY
2000

DESIGNED BY	TERRY MACKIE	DATE	05/2000
DRAWN BY	SCOTT C. NELSON	DATE	05/2000
SUPERVISED BY	W.SEGER & T.CHRISTIANSON	DATE	05/2000
CHECKED BY	W.SEGER & T.MACKIE	DATE	05/2000

BR-46-97

PROJECT NO.	YEAR	SHEET NO.
19006-4120-04	2000	

REVISIONS

NO.	DATE	BY	BRIEF DESCRIPTION
1	6-13-00	WS	REVISED LIST OF DRAWINGS

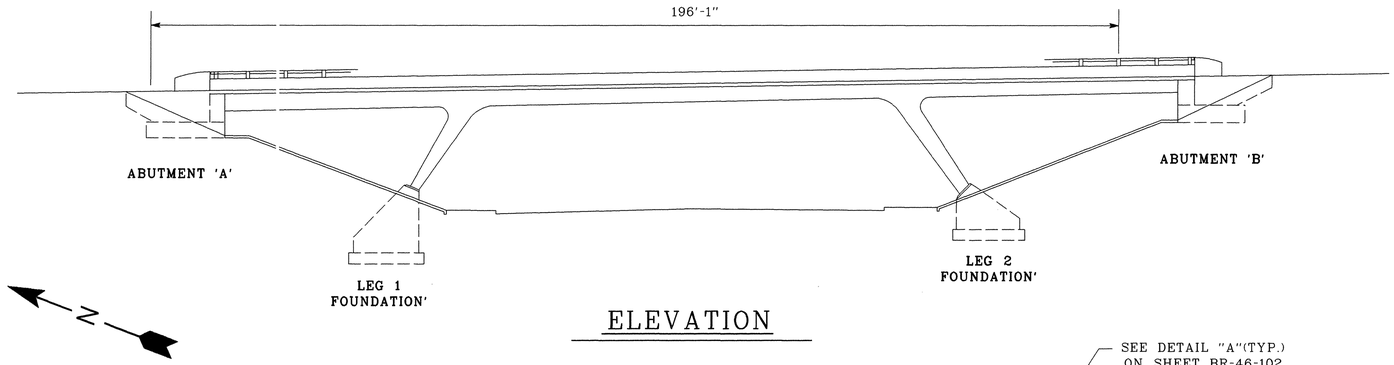

ELEVATION

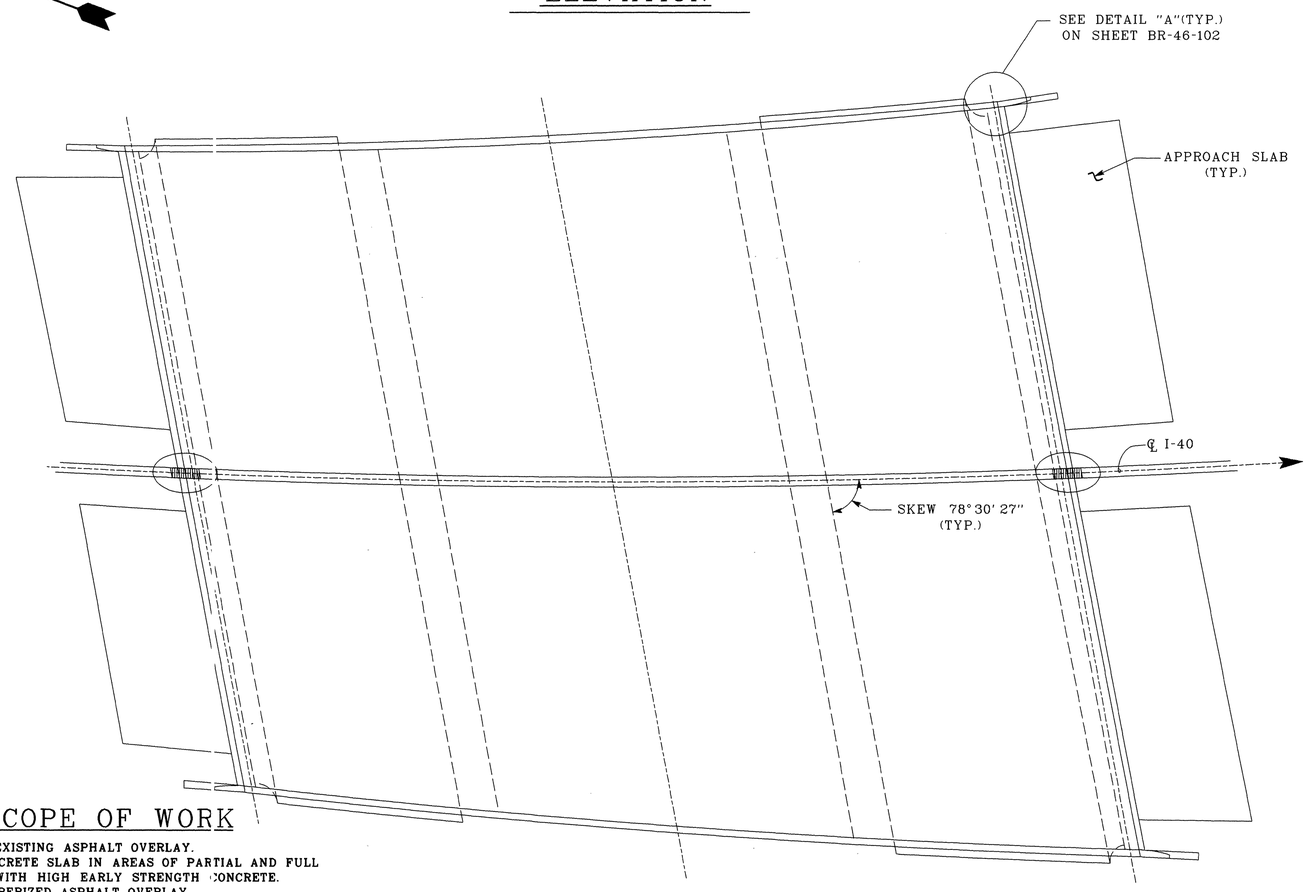

PLAN

GENERAL SCOPE OF WORK

1) SCARIFY 3" TO 4" OF EXISTING ASPHALT OVERLAY.
2) RECONSTRUCT THE CONCRETE SLAB IN AREAS OF PARTIAL AND FULL DEPTH DECK REPAIR WITH HIGH EARLY STRENGTH CONCRETE.
3) PLACE A NEW 2" RUBBERIZED ASPHALT OVERLAY
4) REMOVE 4'-0" OF EXISTING CONCRETE MEDIAN BARRIER AT EACH ABUTMENT FOR INSTALLATION OF NEW STRIPSEAL.
5) REMOVE EXISTING EXPANSION JOINTS AND REPLACE WITH NEW STRIP SEAL EXPANSION JOINTS (TYPE A).
6) APPLY NON-PENETRATING CONCRETE SEALER TO ABUTMENTS.
7) HAND TOOL CLEAN AND PAINT THE EXISTING ABUTMENT BEARINGS.
8) REMOVE GUARDRAIL AT BRIDGE ENDS AND REPLACE WITH NEW SECTION WITH RUBRAILS. SEE STANDARD DRAWING NO. SBR-2 133 AND SBR-2-134.
9) MAINTAIN TRAFFIC WITH PHASING.

DESIGNED BY Terry Mackie DATE May 2000
DRAWN BY Don Kimber DATE May 2000
SUPERVISED BY W. Seger & T. Christianson DATE May 2000
CHECKED BY W. Seger & Terry Mackie DATE

1 LIST OF DRAWINGS

DRAWING NO.	LAST REV. DATE	DRAWING
BR-46-98	6-13-00	LAYOUT OF BRIDGE TO BE REPAIRED
BR-46-100	6-13-00	ESTIMATED QUANTITIES AND GENERAL NOTES
BR-46-101		ESTIMATED QUANTITIES AND GENERAL NOTES
BR-46-99		PHASE CONSTRUCTION DETAILS
BR-46-102		BRIDGE REPAIR DETAILS
BR-46-103		BRIDGE REPAIR DETAILS

LIST OF REFERENCE DRAWINGS

(TO BE PRINTED WITH PLANS)

DRAWING NO.	DRAWING
K-80-39 THRU 43 AND K-80-48	EXISTING BRIDGE DRAWINGS

LIST OF STANDARD DRAWINGS

DENOTES: TO BE PRINTED WITH PLANS

DRAWING NO.	LAST REV. DATE	DRAWING
SBR-2-115	1-4-96	GENERAL NOTES AND DETAILS FOR EXPANSION JOINT REPLACEMENT CONSTRUCTION TYPES "A" THRU "J"
SBR-2-116	1-4-96	GENERAL DETAILS FOR STRIP SEAL EXPANSION JOINT REPLACEMENT CONSTRUCTION DETAILS TYPES "A" THRU "J"
SBR-2-117	5-30-96	STRIP SEAL EXPANSION JOINTS-REPLACEMENT CONSTRUCTION DETAILS TYPE "A" AND TYPE "B"
SBR-2-133	1-4-96	DETAILS SHOWING GUARDRAIL ATTACHMENT AT BRIDGE ENDS TO EXISTING CONCRETE VERTICAL FACE ENDPOST
SBR-2-134	1-4-96	DETAILS SHOWING GUARDRAIL ATTACHMENT AT BRIDGE ENDS TO EXISTING CONCRETE VERTICAL FACE OF ENDPOST

DENOTES: REMOVE AND REPLACE THE EXISTING CONCRETE MEDIAN BARRIER AT THESE TWO (2) LOCATIONS. ALSO FORM A 2" JOINT IN BARRIER FOR EXPANSION. FOR NEW STRIPSEAI JOINT, SEE DRAWING NO'S. SBR-2-115, SBR-2-116 & SBR-2-117 FOR ADDITIONAL NOTES AND DETAILS SEE DRAWING NO. BR-46-103.

LIST OF SPECIAL PROVISIONS

** DENOTES: CURRENT REVISION DATE, AS PER CONTRACT DOCUMENTS.

NO.	LAST REV. DATE	REGARDING
105A	**	APPROVAL OF SHOP DRAWINGS
108B	**	PROJECTION COMPLETION AND INCENTIVE / DISINCENTIVE
604CR	**	REPAIR OF BRIDGE DECK CRACKS
604S	**	STRIPSEAL EXPANSION JOINTS

STATE OF TENNESSEE
DEPARTMENT OF TRANSPORTATION

LAYOUT OF BRIDGE TO BE REPAIRED
INTERSTATE 40 OVER CHARLOTTE AVENUE
BRIDGE NO. 19-I40-17.07
DAVIDSON COUNTY
2000

BR-46-98

PROJECT NO.	YEAR	SHEET NO.
19006-4120-04	2000	

REVISIONS

NO.	DATE	BY	BRIEF DESCRIPTION

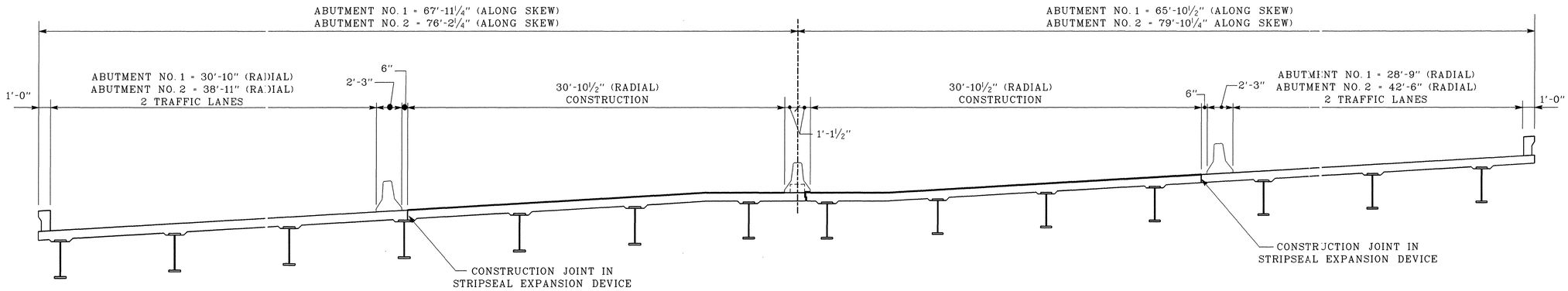

PHASE I CONSTRUCTION

(LOOKING SOUTH)

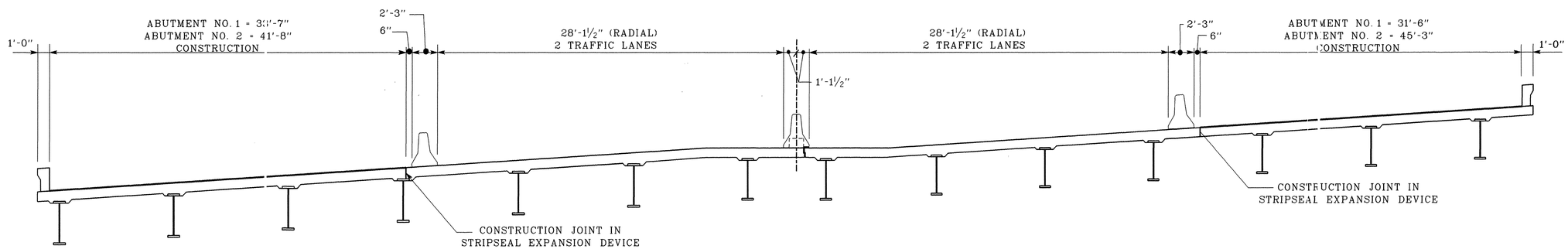

PHASE II CONSTRUCTION

(LOOKING SOUTH)

PHASE CONSTRUCTION DETAILS

(LOOKING SOUTH)

STATE OF TENNESSEE
DEPARTMENT OF TRANSPORTATION

PHASE CONSTRUCTION DETAILS
INTERSTATE 40 OVER
CHARLOTTE AVENUE
BRIDGE NO. 19-I40-17.07
DAVIDSON COUNTY
2000

BR-46-99

DESIGNED BY Terry Mackie DATE May 2000
DRAWN BY Don Kimber DATE May 2000
SUPERVISED BY W. Seger & T. Christianson DATE May 2000
CHECKED BY W. Seger & Terry Mackie DATE

ESTIMATED BRIDGE QUANTITIES

PROJECT NO.	YEAR	SHEET NO.
19006-4120-04	2000	2

REVISIONS

NO.	DATE	BY	BRIEF DESCRIPTION
1	6-13-00	WS	REMOVED ITEM NO. 604-10.03 & OMITTED FOOTNOTES 2 & 8 AND REVISED NOTES

	ITEM NO.	DESCRIPTION	UNIT	QUANTITY PER BRIDGE						TOTAL QUANTITIES
				19-I40-16.60 INTERSTATE 40/ HERMAN ST. & C.S.X. RR	19-I40-16.73 INTERSTATE 40/ CLINTON ST. & C.S.X. RR	19-I40-16.86 INTERSTATE 40/ JO JOHNSON ST.	19-I40-17.07 INTERSTATE 40/ CHARLOTTE AVE.	19-I40-16.13 INTERSTATE 40/ INTERSTATE 265	19-SR12-1.32 STATE ROUTE 12/ INTERSTATE 265	
1	603-02.01	REPAINTING EXISTING STEEL STRUCTURES	L.S.	—	0.5	—	0.5	—	—	1
1										
3	604-10.14	REMOVAL OF EXISTING WEARING SURFACE	L.S.	—	0.4	0.3	0.3	—	—	1
4	604-10.17	NON-PENETRATING CONCRETE SEAL	S.Y.	—	75	70	99	—	—	244
5	604-10.30	BRIDGE DECK REPAIR (FULL DEPTH OF SLAB)	S.Y.	—	10	10	10	—	—	30
6	604-10.32	EXPANSION JOINT REPAIRS (TYPE "A")	L.F.	—	244	—	290	—	—	534
7	604-10.44	EXPANSION JOINT REPAIRS	L.F.	—	—	288	—	—	—	288
5	604-10.50	BRIDGE DECK REPAIR (PARTIAL DEPTH OF SLAB)	S.Y.	—	550	300	325	—	—	1175
9	604-10.90	MISCELLANEOUS BRIDGE ITEMS	L.S.	—	1	—	—	—	—	1
	604-10.92	MEDIAN BARRIER REPAIR	L.F.	4	8	—	8	—	—	20
10	705-10.28	PIER PROTECTION (NEW CONCRETE BARRIER WALL)	L.F.	—	—	—	—	16	267	283

FOOTNOTES

(1) INCLUDES HAND TOOL CLEANING, PAINTING, CONTAINMENT AND DISPOSAL AND ALL LABOR AND MATERIALS FOR 58 ABUTMENT BEARING DEVICES PER BRIDGE.

1 (2) OMITTED

(3) INCLUDES ALL LABOR AND MATERIALS FOR REMOVAL AND DISPOSAL OF APPROXIMATELY 3" (±) EXISTING ASPHALT WEARING SURFACE WITHIN THE LIMITS OF EACH BRIDGE AND THE 25'-0" APPROACH PAVEMENTS. EXISTING ASPHALT DEPTHS VARY FROM 3" TO 4".

(4) INCLUDES CLEANING ALL SURFACES OF ALL DEBRIS AND FOREIGN MATERIALS BEFORE APPLYING SEALER. SEE NOTE ON DRAWING NO. BR-40-52.

(5) ITEM NO'S 604-10.30 AND 604-10.50 IS A CONTINENCY ITEM THAT MAY BE INCREASED, DECREASED OR ELIMINATED AS DIRECTED BY THE ENGINEER.

(6) INCLUDES ALL COSTS FOR REMOVAL OF EXISTING CONCRETE AND PLACEMENT OF NEW 18 HOUR CONCRETE, EXPANSION JOINT ASSEMBLY, MECHANICAL BAR SPLICES AND REINFORCEMENT STEEL. SEE STANDARD DRAWING NO'S SBR-2-115 SBR-2-116 AND SBR-2-117 FOR NOTES AND DETAILS.

(7) INCLUDES ELASTOMERIC CONCRETE HEADERS, BACKER ROD, SILICONE JOINT SEALER, SAW CUTTING RUBBERIZED ASPHALT OVERLAY, SURFACE PREPARATION FOR ELASTOMERIC CONCRETE HEADERS AND ALL MISCELLANEOUS LABOR AND MATERIALS TO INSTALL THE SILICONE EXPANSION JOINT ACCORDING TO DETAILS ON DRAWING NO. BR-46-104. PAY LIMITS FOR THIS EXPANSION DEVICE IS FROM TOE OF RAIL TO TOE OF CONCRETE MEDIAN BARRIER.

1 (8) OMITTED

(9) INCLUDES ALL MATERIAL AND LABOR ASSOCIATED WITH THE PORTABLE BARRIER STEEL CONNECTOR PLATE(S) FOR USE ON BRIDGE NO. 19-I40-16.73.

(10) PIER PROTECTION FOR BRIDGE NO. 19-SR12-1.32 SHALL BE LOCATED AT BENT NOS. 1 & 3. REFER TO REFERENCE DRAWING NO. K-67-50 AND K-67-55 FOR DETAILS OF THE EXISTING BENTS. PIER PROTECTION FOR BRIDGE NO. 19-I40 -16.13 SHALL BE LOCATED AT PIER NO. 5. REFER TO REFERANCE DRAWING NO. K-67-6 AND K-67-9 FOR DETAILS OF EXISTING PIER.

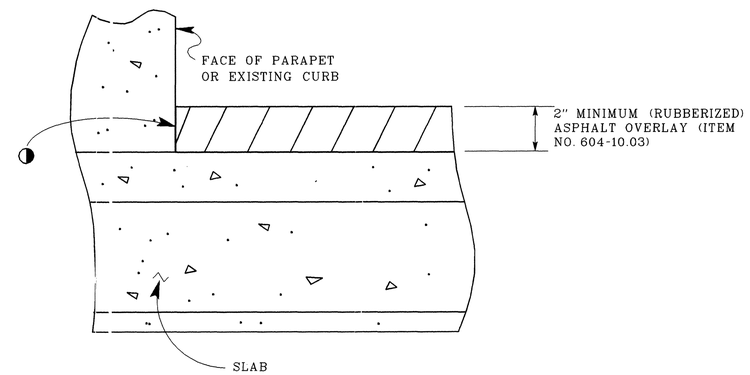

RUBBERIZED ASPHALT PAVEMENT DETAIL

(TYPICAL AT FACE OF EXISTING PARAPET)

1 ◑ MASTIC AS RECOMMENDED BY MANUFACTURER OF RUBBERIZED ASPHALT AND TO BE INCLUDED IN ROADWAY ITEM NO. 604-10.57

1

NOTES PERTAINING TO RUBBERIZED ASPHALT SEAL

THE AGGREGATE, CEMENT AND ADDITIVE FOR THE RUBBERIZED ASPHALT OVERLAY SHALL BE INCLUDED IN ROADWAY QUANTITIES. THEY SHALL BE INCLUDED IN ROADWAY ITEM NO'S. 411-01.01, 411-01.02 AND 604-10.57. FOR LIMITS OF RUBBERIZED ASPHALT PAVING SEE THE ROADWAY QUANTITY SHEET.

THE ROSPHALT 50 CONCENTRATE (ROYSTON LABORATORIES, INC.) REQUIRED FOR THE RUBBERIZED ASPHALT OVERLAY SHALL BE INCLUDED UNDER ITEM NO. 604--10.57, BRIDGE DECK OVERLAY (RUBBERIZED ASPHALT ADDITIVE), LBS.

THE CONTRACTOR SHALL WORK WITH A TECHNICAL REPRESENTATIVE OF ROYSTON LABORATORIES, INC TO DESIGN THE ASPHALT MIX. A REPRESENTATIVE SHALL BE PRESENT DURING PAVING OPERATIONS. ROYSTON ROSPHALT 50 RUBBERIZED ASPHALT SHALL BE AS PER MANUFACTURERS SPECIFICATIONS.

STATE OF TENNESSEE
DEPARTMENT OF TRANSPORTATION
ESTIMATED QUANTITIES
BRIDGE NO. 19-I40-16.60
BRIDGE NO. 19-I40-16.73
BRIDGE NO. 19-I40-16.86
BRIDGE NO. 19-I40-17.07
BRIDGE NO. 19-I40-16.13
BRIDGE NO. 19-SR12-1.32
DAVIDSON COUNTY
2000

BR-46-100

DESIGNED BY Terry Mackie DATE May 2000
DRAWN BY Don Kimber DATE May 2000
SUPERVISED BY W. Seger & T.Christianson DATE May 2000
CHECKED BY W. Seger, T. Mackie DATE May 2000

PROJECT NO.	YEAR	SHEET NO.
19006-4120-04	2000	2A(1)

REVISIONS

NO.	DATE	BY	BRIEF DESCRIPTION

UTILITY NOTES

THE LOCATION OF UTILITIES SHALL BE FIELD LOCATED BY THE CONTRACTOR, AND BY CONTACTING THE UTILITY COMPANIES INVOLVED. SOME UTILITIES CAN BE LOCATED BY CALLING THE TENNESSEE ONE CALL SYSTEM, INC. AT 1-800-351-1111.

UNLESS OTHERWISE NOTED, ALL UTILITY ADJUSTMENTS WILL BE PERFORMED BY THE UTILITY OR IT'S REPRESENTATIVE. THE CONTRACTOR AND UTILITY OWNERS WILL BE REQUIRED TO CO-OPERATE WITH EACH OTHER IN ORDER TO EXPEDITE THE WORK REQUIRED BY THIS CONTRACT.

THE CONTRACTOR SHALL PROVIDE ALL NECESSARY PROTECTIVE MEASURES TO SAFEGUARD EXISTING UTILITIES FROM DAMAGE DURING CONSTRUCTION OF THIS PROJECT. IN THE EVENT THAT SPECIAL EQUIPMENT IS REQUIRED TO WORK OVER AND AROUND THE UTILITIES, THE CONTRACTOR WILL BE REQUIRED TO FURNISH SUCH EQUIPMENT. THE COST OF PROTECTING UTILITIES FROM DAMAGE AND FURNISHING SPECIAL EQUIPMENT WILL BE INCLUDED IN THE PRICE BID FOR OTHER ITEMS OF CONSTRUCTION.

THE CONTRACTOR SHALL BE SOLELY RESPONSIBLE FOR CONTACTING ALL AFFECTED UTILITIES PRIOR TO SUBMITTING HIS BID, IN ORDER TO DETERMINE THE EXTENT TO WHICH UTILITY RELOCATIONS AND/OR ADJUSTMENTS WILL HAVE UPON THE SCHEDULE OF THE WORK FOR THE PROJECT. SOME UTILITY FACILITIES MAY NEED TO BE ADJUSTED CONCURRENTLY WITH THE CONTRACTOR'S OPERATIONS, WHILE SOME WORK MAY BE REQUIRED "AROUND" UTILITY FACILITIES THAT WILL REMAIN IN PLACE. IT IS UNDERSTOOD AND AGREED THAT THE CONTRACTOR SHALL RECEIVE NO ADDITIONAL COMPENSATION FOR ANY DELAYS OR INCONVENIENCE CAUSED BY THE UTILITY ADJUSTMENTS.

THE CONTRACTOR SHALL NOTIFY EACH INDIVIDUAL UTILITY OWNER OF HIS PLAN OF OPERATION IN THE AREA OF THE UTILITIES. PRIOR TO COMMENCING WORK, THE CONTRACTOR SHALL CONTACT THE UTILITY OWNERS AND REQUEST THEM TO PROPERLY LOCATE THEIR RESPECTIVE UTILITY ON THE GROUND. THIS NOTIFICATION SHALL BE GIVEN AT LEAST THREE (3) BUSINESS DAYS PRIOR TO COMMENCEMENT OF OPERATIONS AROUND THE UTILITY.

GENERAL TIME LIMITATIONS AND WORK SEQUENCES

FOR EXACT TIMES AND LIQUIDATED DAMAGES SEE SPECIAL PROVISION 108B

REQUIREMENTS AND RESTRICITONS FOR PHASE CONSTRUCTION:

SEE SPECIAL PROVISION 108B FOR TRAFFIC CONTROL RESTRICTIONS AND PROJECT COMPLETION REQUIREMENTS.

ALL ASPHALT MILLING, BRIDGE DECK REPAIR, AND RESURFACING WITH RUBBERIZED ASPHALT SHALL BE IN ACCORD WITH THE TRAFFIC CONTROL FOR ROADWAY CONCRETE SLAB REPAIRS AND RESURFACING.

ALL RESURFACING SHALL BE IN-PLACE AND COMPLETE WITH THE LOCATIONS OF THE BRIDGES AT L.M. 16.60, 16.73, 16.86. AND 17.07 PRIOR TO BEGINNING EXPANSION JOINT WORK.

EXPANSION JOINT REPLACEMENTS ON BRIDGES AT L.M. 16.73, 16.66 AND 17.07 SHALL BE CONSTRUCTED CONCURRENTLY ON WEEKENDS ONLY, BETWEEN FRIDAY @ 7:00 PM CSDT AND MONDAY @ 6:00AM CSDT.

GENERAL NOTES

SPECIFICATIONS:
STANDARD ROAD AND BRIDGE SPECIFICATIONS OF THE TENNESSEE DEPARTMENT OF TRANSPORTATION. (MARCH 1, 1995 EDITION)

DESIGN SPECIFICATIONS:
AASHTO 1996 EDITION WITH ADDENDA.

REINFORCING STEEL:
SEE THE STANDARD SPECIFICATIONS.

SHOP DRAWINGS:
SHALL BE SUBMITTED ACCORDING TO SPECIAL PROVISION NO. 105A. SHOP DRAWINGS SHALL BE SUBMITTED TO THE BRIDGE REPAIR OFFICE OF THE DIVISION OF STRUCTURES.

CONCRETE CURING:
ALL CONCRETE IN REPAIR AREAS SHALL BE WET CURED ACCORDING TO THE STANDARD SPECIFICATIONS.

MECHANICAL BAR SPLICERS:
MUST BE ON THE APPROVED LIST MAINTAINED BY THE DIVISION OF MATERIALS AND TESTS. THE BAR SPLICER SHALL MEET AASHTO STANDARD SPECIFICATIONS FOR MECHANICAL CONNECTION. WHEN EPOXY COATING IS REQUIRED, THE EXPOSED THREADS SHALL BE REPAIRED AFTER SPLICING ACCORDING TO THE STANDARD SPECIFICATIONS, SECTION 907.

DEMOLITION:
THE CONTRACTOR SHALL TAKE SPECIAL CARE TO PROTECT ANY PARTS OF THE STRUCTURE THAT ARE NOT TO BE REMOVED SPECIFICALLY. THE CONTRACTOR IS NOT ALLOWED TO USE A HYDRAULIC RAM MOUNTED ON A BACKHOE (COMMONLY CALLED A HOE RAM) OR OTHER SIMILARY HEAVY EQUIPMENT FOR CONCRETE REMOVAL. PNEUMATIC HAMMERS MAY BE USED TO REMOVE UNSOUND CONCRETE. FOR FULL DEPTH OF CONCRETE SLAB REMOVAL EXCEPT OVER BEAMS. THE MAXIMUM HAMMER SIZE IS 90 POUND CLASS. FOR PARTIAL DEPTH OF CONCRETE SLAB REMOVAL AND ANY WORK OVER BEAMS, THE MAXIMUM HAMMER SIZE IS 60 POUND CLASS. SAWING OR CUTTING OF CONCRETE IS ACCEPTABLE AS LONG AS ANY SPECIFIED PROJECTION OF THE EXISTING REINFORCING STEEL IS MAINTAINED. ALL DEVICES PROPOSED FOR CONCRETE DEMOLITION SHALL MEET WITH APPROVAL OF THE ENGINEER.

WELDING:
ANSI/AASHTO/AWS D1.5-88 BRIDGE WELDING CODE AND THE STANDARD SPECIFICATIONS.

ROADSIDE BANKS/SLOPES:
ROADSIDE BANKS/ SLOPES USED BY THE CONTRACTOR FOR WORK ACCESS, PARKING, AND ANY OTHER OPERATIONS THAT ARE DISTURBED BY HIS OPERATIONS SHALL BE REPAIRED BY REGRADING, RESEEDING, MULCHING, OR WHATEVER MEANS ARE NECESSARY TO RESTORE THE BANKS/SLOPES TO THE ORIGINAL CONDITION. ALL RESTORATION WORK SHALL MEET THE FULL SATISFACTION OF THE ENGINEER. COST OF ALL RESTORATION WORK SHALL BE INCLUDED IN ITEMS BID ON.

FINISHING CONCRETE SURFACES:
CONCRETE FINISHING SHALL BE IN ACCORDANCE WITH SECTION 604.22 OF THE TENNESSEE STANDARD SPECIFICATION. A CLASS I FINISH FOLLOWED BY AN APPLIED TEXTURE FINISH SHALL BE USED IN LEIU OF A CLASS II FINISH. NO TEXTURE FINISH SHALL BE APPLIED PRIOR TO COMPLETION OF PAVING AND HAULING OPERATIONS AT THE BRIDGE SITE.

HIGH EARLY STRENGTH CONCRETE (EXPANSION JOINTS, FULL AND PARTIAL DEPTH REPAIRS CONCRETE MEDIAN BARRIER AND RAILS):
SHALL BE HIGH EARLY STRENGTH CONCRETE WITH A COMPRESSIVE STRENGTH OF 3,000 p.s.i. AT 18 HOURS. THE CONTRACTOR SHALL PROVIDE PROOF PRIOR TO BEGINNING WORK THAT THE PROPOSED CONCRETE MIX SHALL OBTAIN REQUIRED PROPERTIES. PROOF SHALL BE PROVIDED BY AN INDEPENDENT TESTING COMPANY AND SUBMITTED TO THE MATERIALS AND TEST DIVISION OF THE TENNESSEE DEPARTMENT OF TRANSPORTATION FOR APPROVAL. TRAFFIC SHALL NOT BE PERMITTED ON ANY OF THE REPAIR AREAS UNTIL TEST SPECIMENS ATTAIN A COMPRESSIVE STRENGTH OF 3,000 p.s.i. MINIMUM AND THE CONCRETE HAS BEEN IN PLACE A MINIMUM OF 18 HOURS.

EXPANSION JOINTS:
FOR ADDITIONAL GENERAL NOTES APPLICABLE TO STRIP SEAL EXPANSION JOINTS, SEE STANDARD DRAWING NO. BR-2-115. ALSO SEE SPECIAL PROVISION NO. 604S.

SPECIAL NOTE TO CONTRACTOR:
1. NO CONCRETE OR OTHER DEBRIS SHALL BE ALLOWED TO DROP ONTO THE ROADWAY BELOW WHEN MAKING REPAIRS TO THE EXISTING STRUCTURE. THE CONTRACTOR SHALL UTILIZE TEMPORARY LANE CLOSURES ON ROAD BENEATH THE BRIDGE WHEN REPAIRING THE BRIDGE DECK, FULL AND PARTIAL DEPTH.
2. A TECHNICAL REPRESENTATIVE FROM THE RUBBERIZED ASPHALT MANUFACTURER SHALL BE ON-SITE TO SUPERVISE AND GUIDE THE CONTRACTOR DURING THE PAVING OF THE RUBBERIZED ASPHALT OVER THE BRIDGES TO INSURE PROPER INSTALLATION.
3. A TECHNICAL REPRESENTATIVE FROM THE ELASTOMERIC CONCRETE/SILICONE EXPANSION JOINT MANUFACTURER SHALL BE ON-SITE TO SUPERVISE THE CONSTRUCTION OF SAID JOINT TO INSURE PROPER INSTALLATION PROCEDURES.

CLEANING AND PAINTING:
ALL STEEL BEARINGS SHALL BE CLEANED AND PAINTED. CLEANING SHALL BE IN ACCORDANCE WITH TENNESSEE STANDARD SPECIFICATION SECTION 603.05 (A.). HAND OR POWER TOOL CLEANING SHALL REMOVE ALL RUST, SCALE, LOOSE PAINT AND DIRT. AFTER CLEANING, THE BEARINGS SHALL BE PAINTED WITH AN APPROVED EPOXY MASTIC PAINT APPLIED AT A MINIMUM DRY FILM THICKNESS OF 4.0 MILS. THE COLOR OF THE FINISH COAT SHALL COMPLY WITH FEDERAL STANDARD NO. 595A, FEDERAL SPEC. NO. 24110 (BRIGHT GREEN). SEE SECTIONS 603 AND 910 OF THE STANDARD SPECIFICATIONS.

SEE THE TENNESSEE DEPARTMENT OF TRANSPORTATION'S QUALIFIED PRODUCTS LIST FOR ACCEPTABLE BRANDS OF EPOXY MASTIC. ALL PRODUCTS USED, INCLUDING THINNERS SHALL BE SUPPLIED BY THE SAME MANUFACTURER.

APPLICATION: THE COATING APPLICATOR SHALL FOLLOW THE MANUFACTURER'S PRINTED INSTRUCTIONS AND SHALL HAVE THESE INSTRUCTIONS ON SITE DURING THE COURSE OF THE WORK.

CONCRETE SEALER:
CONCRETE SEALER SHALL BE APPLIED TO SUBSTRUCTURES COINCIDING WITH EXPANSION JOINT LOCATIONS BEFORE PLACEMENT OF BEARING DEVICES AND APPLYING TEXTURE COATING. CONCRTE SEALER SHALL BE APPLIED TO THE FRONT VERTICAL FACE OF THE ABUTMENT BACKWALL, THE FRONT AND TOP OF THE ABUTMENT BEAM PLUS CURTAIN WALL, SUMP WALLS OR ANY OTHER FACES THAT ARE DEEMED NECESSARY BY THE ENGINEER. CONCRTE SHALL BE CLEAN AND DRY BEFORE APPLYING THE CONCRETE SEAL, AND THE THICKNESS OF THE SEAL SHALL BE AS RECOMMENDED BY THE SEALANT MANUFACTURER. ACCEPTABLE CONCRETE SEALERS ARE INCLUDED IN THE QUALIFIED PRODUCTS LIST OF NON-PENETRATING CONCRTE SEALS MAINTAINED BY THE DIVISOIN OF MATERIALS AND TESTS. THE SEALER SHALL BE CLEAR OR SIMILAR TO THE COLOR OF EXISTING CONCRETE SURFACES TO BE SEALED. THE COST OF THE SEALER, COMPLETE AND IN PLACE, SHALL BE INCLUDED IN ITEM NO. 604-10.17.

STATE OF TENNESSEE
DEPARTMENT OF TRANSPORTATION

GENERAL NOTES
BRIDGE NO. 19-I40-16.60
BRIDGE NO. 19-I40-16.73
BRIDGE NO. 19-I40-16.86
BRIDGE NO. 19-I40-17.07
BRIDGE NO. 19-I265-0
DAVIDSON COUNTY
2000

DESIGNED BY TERRY MACKIE DATE MAY 1999
DRAWN BY DON KIMBER DATE JUNE 1999
SUPERVISED BY W. SEGER & TOMMY CHRISTIANSON DATE JUNE 1999
CHECKED BY W. SEGER & TERRY MACKIE DATE JUNE 1999

BR-46-101

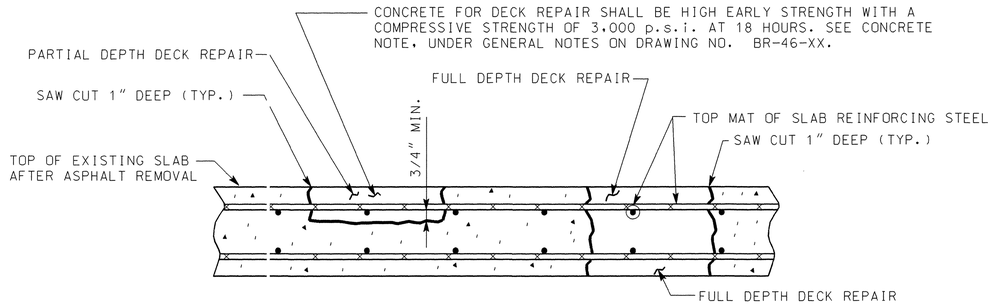

DETAIL SHOWING FULL AND PARTIAL DEPTH DECK REPAIR

(BRIDGE NO. 19-I40-16.73, 19-I40-16.86 & 19-I40-17.07)

REMOVE CONCRETE IN ALL DELAMINATED AREAS TO A DEPTH OF 3/4" BELOW THE TOP BAR OF THE TOP MAT OF REINFORCING STEEL. ALL REINFORCING STEEL IN AREAS OF DECK REPAIR SHALL BE COMPLETELY CLEANED. AREAS OF CONCRETE REMOVAL SHALL BE DESIGNATED BY PERSONNEL FROM THE BRIDGE REPAIR OFFICE INSPECTIONS TO DETERMINE AREAS OF DECK REPAIR SHALL BE SCHEDULED WITH THE BRIDGE REPAIR OFFICE AT LEAST THREE (3) DAYS IN ADVANCE. DECK REPAIR WILL BE PAID FOR UNDER ITEM NO. 604-10.50, BRIDGE DECK REPAIR (PARTIAL DEPTH OF SLAB), AND ITEM NO.604-10.30, BRIDGE DECK REPAIR (FULL DEPTH OF SLAB). DURING PARTIAL DEPTH REPAIRS, SHOULD DETERIORATED CONCRETE BE ENCOUNTERED WHICH APPEARS TO RUN FULL DEPTH IN THE SLAB, THE ENGINEER MAY DESIGNATE THESE AREAS TO BE REPAIRED UNDER ITEM NO. 604-10.30. POWER DRIVEN HAND TOOLS USED FOR THE REMOVAL OF UNSOUND CONCRETE IN MAKING PARTIAL AND FULL DEPTH REPAIRS ARE SUBJECT TO THE FOLLOWING RESTRICTIONS: 1) (PARTIAL DEPTH REPAIRS) PNEUMATIC HAMMERS HEAVIER THAN NOMINAL 60 POUND CLASS SHALL NOT BE USED. 2) (FULL DEPTH REPAIRS) PNEUMATIC HAMMERS HEAVIER THAN NOMINAL 90 POUND CLASS SHALL NOT BE USED. ALSO ALL DECK REPAIR OVER BEAMS WILL BE RESTRICTED TO 60 POUND PNEUMATIC HAMMERS. 3) CHIPPING HAMMERS OF THE 15 POUND CLASS SHALL BE USED TO REMOVE CONCRETE FROM BENEATH ANY REINFORCING STEEL. 4) TRAFFIC CONTROL SHALL BE PROVIDED FOR TRAFFIC BELOW BRIDGE DURING PARTIAL AND FULL DEPTH DECK REPAIR.

NOTE: ITEM NO. 604-10.30 AND 604-10.50 SHALL BE BID WITH THE CONTINGENCY THAT THESE ITEMS MAY BE INCREASED, DECREASED, OR ELIMINATED AS DIRECTED BY THE ENGINEER.

PROJECT NO.	YEAR	SHEET NO.
19006-4120-04	2000	

REVISIONS

NO.	DATE	BY	BRIEF DESCRIPTION

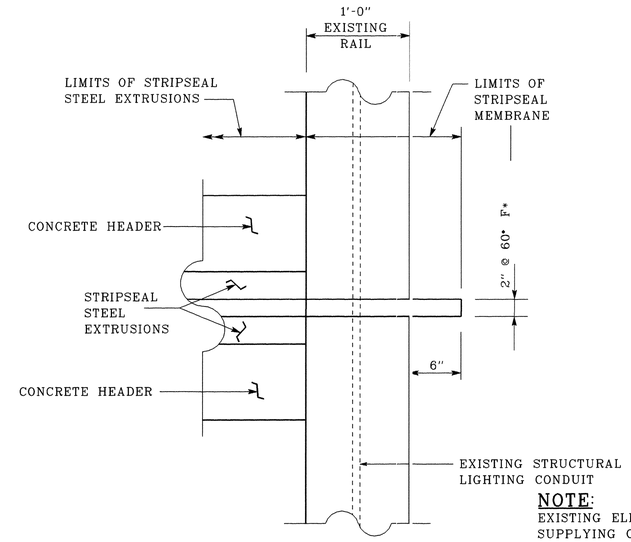

NOTE:
EXISTING ELECTRICAL CONDUIT INSIDE THE PARAPET SUPPLYING CURRENT TO OVERHEAD LIGHTING ON BRIDGE. ANY DAMAGE TO CONDUIT OR WIRING DURING REPAIRS SHALL BE REPLACED TO THE SATISFACTION OF THE ENGINEER AT THE CONTRACTORS EXPENSE.

DETAIL "A"

(BRIDGE NO. 19-I40-16.73 & 19-I40-17.07)

* DENOTES: IF EXISTING OPENING IN RAIL IS CLOSED OR LESS THAN TWO INCHES (2") IT SHALL BE SAW CUT OR REMOVED AND REPOURED TO A 2" EXPANSION OPENING. OPENING SHALL BE IN LINE WITH PROPOSED STRIPSEAL OPENING. COST TO BE INCLUDED IN ITEM NO. 604-10.32

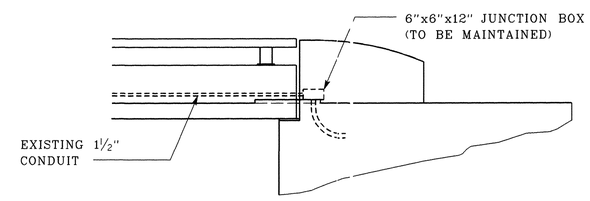

ELEVATION AT BRIDGE RAIL END POST

SHOWING

STATE OF TENNESSEE
DEPARTMENT OF TRANSPORTATION

BRIDGE REPAIR DETAILS
BRIDGE NO. 19-I40-16.73
BRIDGE NO. 19-I40-16.86
BRIDGE NO. 19-I40-17.07
DAVIDSON COUNTY
2000

DESIGNED BY Terry Mackie DATE May 2000
DRAWN BY Scott C. Nelson & Don Kimber DATE May 2000
SUPERVISED BY W.Seger & T.Christianson DATE May 2000
CHECKED BY W.Seger & T.Mackie DATE

PROJECT NO.	YEAR	SHEET NO.
19006-4120-04	2000	

REVISIONS

NO.	DATE	BY	BRIEF DESCRIPTION

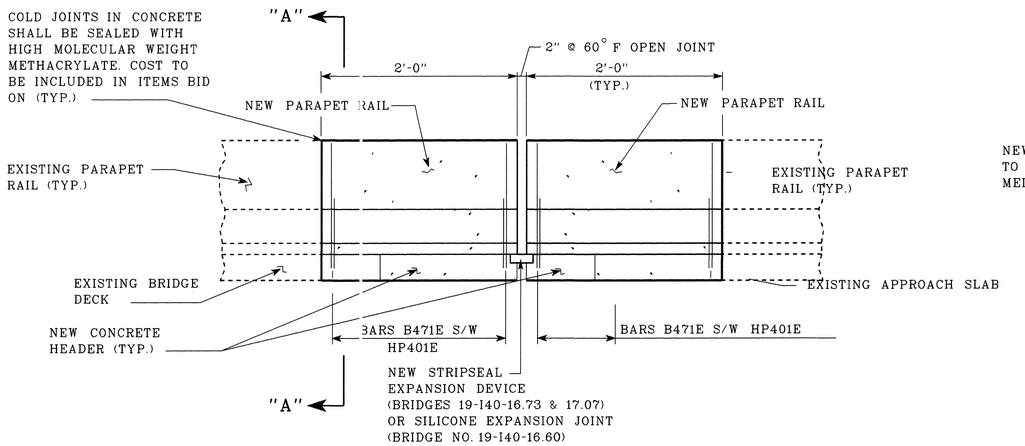

ELEVATION

(SHOWING NEW POUR FOR PARAPET AND STRIPSEAL/SILICONE EXPANSION JOINT @ ABUT. NO.'S 1 & 2)

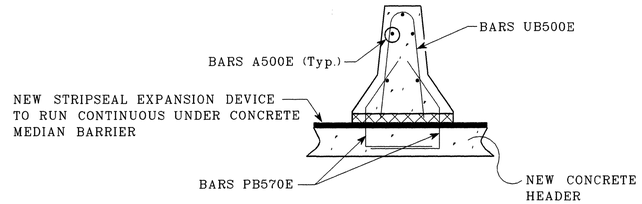

SECTION "A-A"

NOTE:

THE COST OF REMOVING PORTIONS OF THE EXISTING MEDIAN BARRIER RAIL REINFORCEMENT STEEL, AND ANY MISCELLANEOUS MATERIALS NEEDED, SHALL BE INCLUDED IN THE COST OF ITEM NO. 604-10.92, .

CARE SHALL BE TAKEN WHEN REMOVING EXISTING PARAPET RAIL SO AS NOT TO DAMAGE ANY OF THE EXISTING REINFORCING STEEL WHICH IS TO BE MAINTAINED.

THE CONTRACTOR IS RESPONSIBLE FOR ASSURING THAT THE ELECTRICAL CURRENT IS DISCONNECTED PRIOR TO REMOVING ANY PORTION OF THE EXISTING PARAPET RAILS. COST TO BE INCLUDED IN ITEMS BID ON.

WHEN POURING NEW CONCRETE HEADERS, PROVISIONS SHALL BE MADE FOR SETTING THE REINFORCING STEEL FOR THE PARAPET RAILS. THE PARAPET SHALL NOT BE POURED UNTIL THE CONCRETE HEADERS ARE POURED AND CURED.

APPLY A METHACRYLATE CRACK SEALER ALONG THE LONGITUDINAL AND TRANSVERSE CONSTRUCTION JOINTS OF THE JOINT HEADERS.

FOR COMPLETE DETAILS, SEE DRAWING NO. K-80-48.

NOTE:

CONTRACTOR SHALL INSTALL A 3/8" THICK STEEL CONNECTOR PLATE TO THE PORTABLE CONCRETE BARRIERS IN AREAS WHERE NEW EXPANSION JOINTS ARE TO BE INSTALLED AND DECK REPAIRS ARE TO BE PERFORMED. THE CONNECTOR PLATES SHALL BE USED ON THE OPPOSITE SIDE DURING PHASE II CONSTRUCTION. 1" DIA. HOLES MAY BE REUSED FOR PHASE II CONSTRUCTION WITH NEW HOLES FOR BOTTOM MASONRY ACHORS.

1" DIA. HOLES FOR THE MASONRY ANCHOR AND 1" DIA. HOLES FOR 7/8" DIA. BOLTS SHALL BE DRILLED WITH A HIGH SPEED DRILL. THE DRILL BIT SHALL BE CAPABLE OF DRILLING THROUGH EXISTING REINFORCING BARS AND CONCRETE.

COST OF THE 3/8" THICK STEEL CONNECTOR PLATES, ALL BOLTS WITH HEX NUTS AND WASHERS, MASONRY ANCHORS, DRILLING, LABOR, AND ALL MISCELLANEOUS MATERIALS NECESSARY FOR THE INSTALLATION OF THREE (3) STEEL BARRIER CONNECTOR PLATES TO BE INCLUDED IN ITEM NO. 604-10.90 MISCELLANEOUS BRIDGE ITEMS, L.S.. CONTRACTORS BID FOR THIS ITEM SHALL BE FOR FIVE (5) PLATES WITH A TOTAL WEIGHT OF 3600 LBS.. IF THE CONTRACTOR ELECTS TO FABRICATE MORE THAN FIVE (5) PLATES, IT SHALL BE AT HIS OWN EXPENSE.

IN LIEU OF THE 16'-9" STEEL BARRIER CONNECTOR PLATE AS SHOWN IN DETAIL, THE CONTRACTOR HAS THE OPTION OF SUBMITTING TO THE ENGINEER AN ALTERNATE METHOD OF PLACING THE CONCRETE PORTABLE BARRIERS WHEN WORKING AROUND THE REPAIR AREAS. IF ALTERNATIVE IS CHOSEN, IT SHALL BE THE RESPONSIBLITY OF THE CONTRACTOR TO PROTECT THE TRAFFIC FROM THE REPAIR AREAS. IF ALTERNATIVE METHOD IS CHOSEN, THERE SHALL BE NO ADDITIONAL COMPENSATION.

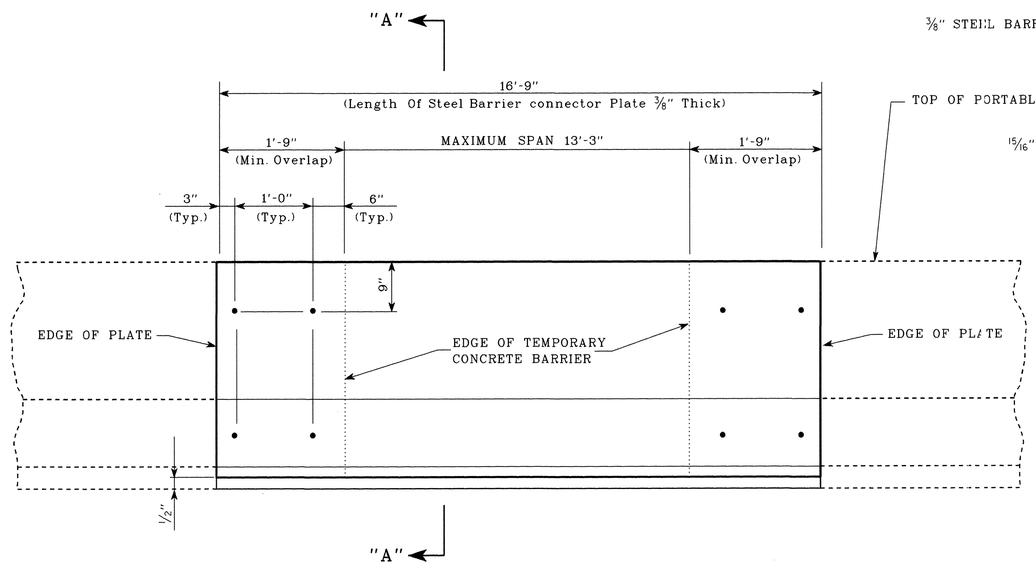

ELEVATION SHOWING PORTABLE STEEL BARRIER CONNECTOR PLATE

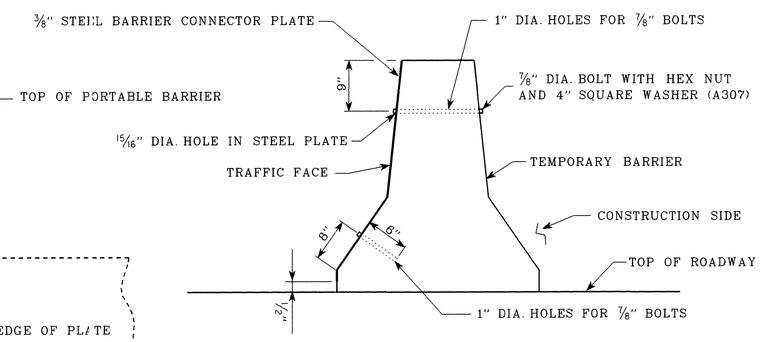

SECTION "A-A"

PORTABLE STEEL BARRIER CONNECTOR PLATE DETAIL

STATE OF TENNESSEE
DEPARTMENT OF TRANSPORTATION

BRIDGE REPAIR DETAILS
BRIDGE NO. 19-I40 16.60
BRIDGE NO. 19-I40 16.73
BRIDGE NO. 19-I40-17.07
DAVIDSON COUNTY
2000

DESIGNED BY	Rocky Christy	DATE	May, 1998
DRAWN BY	Don Kimber	DATE	May, 1998
SUPERVISED BY	Mike Lawson, T. Christianson	DATE	May, 1998
CHECKED BY	Wayne Seger, Rocky Christy	DATE	May, 1998

BR-46-103

NOTE: AFTER THE RUBBERIZED ASPHALT OVERLAY HAS BEEN PLACED, IT SHALL BE SAW CUT DOWN TO THE EXISTING CONCRETE. ELASTOMERIC CONCRETE HEADERS SHALL THEN BE PLACED SO AS TO MATCH THE NEW RIDING SURFACE.

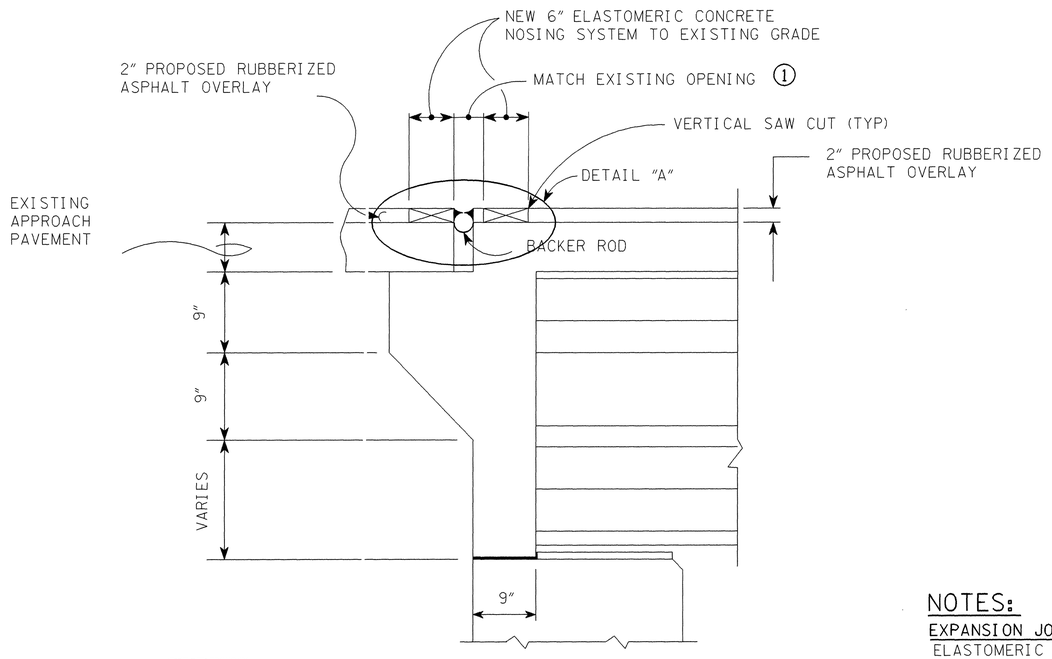

DENOTES: ELASTOMERIC CONCRETE HEADERS

SECTION "A-A"

(BRIDGE NO. 19-I40-16.86)

NOTE: COST OF ELASTOMERIC CONCRETE, BACKER ROD SILICONE JOINT SEALER

JOINT REPAIR DETAIL

SECTION AT END APPROACH SLAB
(TYP. @ BOTH BRIDGE ENDS)

NOTES:

EXPANSION GAP WILL CHANGE AT OTHER TEMPERATURES AND THE CONTRACTOR SHALL COMPENSATE FOR JOINT MATERIAL IN ACCORDANCE WITH THE MANUFACTURER'S RECOMENDATIONS. NO INCREASE IN THE UNIT BID PRICE SHALL BE ALLOWED.

THE DEPTH OF THE JOINT POURED SHALL BE IN ACCORDANCE WITH THE MANUFACTURER'S SPECIFICATIONS. FOR PROPER INSTALLATION THE PAVEMENT AND AIR TEMPERATURE SHALL BE 40° F AND RISING AND SHALL NOT FALL BELOW 40° F PRIOR TO COMPLETE CURE OF THE SEALANT.

THE SEALANT THICKNESS PLACED SHALL BE CHECKED PRIOR TO CURING, AT A MINIMUM OF THREE LOCATIONS ACROSS A TWELVE FOOT LENGTH OF JOINT TO ASSURE PROPER THICKNESS.

1 THE MOVEMENT GAP SHALL BE CAULKED WITH A BACKER ROD OF SUITABLE DIAMETER. THE ROD SHALL BE PLACED AT A DEPTH TO ENSURE THE CORRECT WIDTH/DEPTH RATIO OF THE NEW BRIDGE JOINT SEALER. BACKER ROD AND SILICONE SHALL BE AS PER THE SEALER MANUFACTURER.

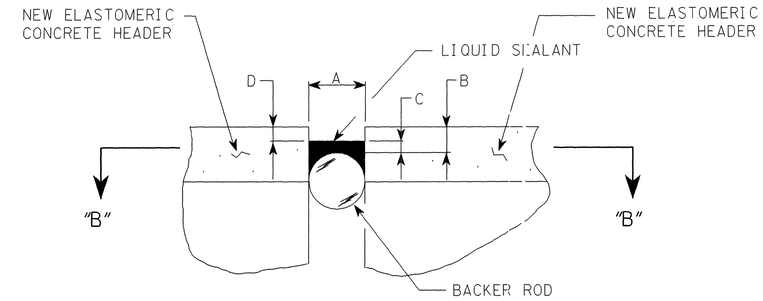

DETAIL "A"

(EXPANSION JOINT DIAGRAM)

A JOINT OPENING AT TIME OF SEALING	B MINIMUM SPACE FROM TOP OF BACKER ROD TO DRIVE SURFACE	C DEPTH OF SILICONE FROM TOP OF BACKER ROD TO SURFACE OF SILICONE	D MINIMUM SPACE FROM TOP OF SILICONE TO DRIVE SURFACE
UP TO 3"	1⅜" MIN.	½" -⅝"	¾" MIN.
ABOVE 3"	1¾" MIN.	⅝" -¾"	1" MIN.

NOTES:

EXPANSION JOINT REPAIR:

ELASTOMERIC CONCRETE/SILICONE EXPANSION JOINT SYSTEM INCLUDES FURNISHING ALL MATERIALS AND EQUIPMENT, COMPLETE INSTALLATION AND IN ACCORDANCE WITH THE MANUFACTURER'S RECOMMENDATIONS. THE JOINT SEALANT SYSTEM CONSISTS OF A SURFACE PRIMER; A SELF-LEVELING OR NON-SAG SEALANT AND BACKER MATERIAL. DETAILED SPECIFICATIONS AND INSTALLATION PROCEDURES SHALL BE SUBMITTED TO THE PROJECT ENGINEER PRIOR TO CONSTRUCTION. THE MANUFACTURER AND THE CONTRACTOR SHALL BE RESPONSIBLE FOR THE WORKMANSHIP AND PERFORMANCE OF THE INSTALLED JOINT.

JOINT SEALANT:

THE JOINT SEALANT WILL BE A POURABLE, COLD APPLIED (TWO COMPONENT) RAPID-CURING, SELF LEVELING SILICONE WHEN INSTALLED ON GRADES LESS THAN OR EQUAL TO 3% ALONG THE CENTERLINE OF THE JOINT. JOINT SEALANTS USED IN CONJUNCTION WITH OTHER MANUFACTURER APPROVED COMPONENTS COMPRISING ANOTHER MANUFACTURER'S JOINT SEALANT SYSTEM, WILL MEET THE REQUIREMENTS OF THESE SPECIFICATIONS. PRIOR TO PREPARING THE JOINT SEALANT, THE MANUFACTURER'S REPRESENTATIVE WILL BE CONSULTED TO ESTABLISH THE USABLE POT LIFE OF THE MATERIAL TO BE MIXED CONSIDERING THE AMBIENT TEMPERATURE AT THE TIME OF MIXING, WHEN MIXING HAS BEEN COMPLETED THE AGE OF THE MIXTURE WILL BE TIMED AND THE MATERIAL WILL BE DISCARDED WHEN THE MANUFACTURER'S PREDICTED POT LIFE HAS BEEN EXCEEDED. IF AT ANY POINT IN THE TIME DURING THE INSTALLATION OF JOINT SEALANT THE MANUFACTURER'S REPRESENTATIVE DETERMINES THAT THE MIXED JOINT SEALANT HAS CURED TO A POINT WHERE IT CAN NOT BE PROPERLY INSTALLED IT WILL BE DISCARDED.

SURFACE PRIMER:

THE JOINT SEALANT MUST BE APPLIED TO CONCRETE SURFACES WITH THE USE OF A SPECIAL PRIMER FOR EACH APPLICATION. THE VERTICAL FACES OF THE JOINT RECEIVING SURFACE PRIMER ARE TO BE FREE OF DUST PARTICLES, MOISTURE, OILS AND LAITANCE AT THE TIME THE SURFACE PRIMER IS APPLIED. PER THE MANUFACTURER'S REQURIEMENTS, THE SURFACE PRIMER WILL BE FULLY CURED BEFORE THE JOINT SEALANT IS INSTALLED. THE MANUFACTURER'S APPROVAL AND INSTALLATION PROCEDURES FOR A SPECIAL PRIMER MUST BE GIVEN TO THE PROJECT ENGINEER IN WRITING BEFORE THE PRIMER IS INSTALLED.

JOINTS:

ALL EXISTING JOINT OPENINGS SHALL BE THOROUGHLY CLEANED OF FOREIGN MATERIAL AND EXISTING JOINT MATERIAL BEFORE PLACING THE NEW EXPANSION JOINTS.

NOTES:

COST OF INSTALLING NEW EXPANSION JOINT, EXCAVATION, SAW CUTTING BACKER ROD, ELASTOMERIC CONCRETE, NEW JOINT SEALER, LABOR, AND ANY MISCELLANEOUS MATERIALS NECESSARY TO INSTALL THE NEW EXPANSION JOINT TO BE INCLUDED UNDER ITEM NO. 604-10.44 EXPANSION JOINT REPAIRS, L.F.

TOP 3" OF JOINT SHALL BE BLAST CLEANED TO REMOVE LAITANCE AND OTHER DELETERIOUS MATERIAL BEFORE INSTALLATION OF BACKER ROD OR SEALANT.

ALL DEBRIS AND EXISTING JOINT MATERIAL SHALL BE REMOVED FOR THE FULL DEPTH OF THE EXISTING JOINT OPENING.

PROJECT NO.	YEAR	SHEET NO.
19006-4120-04	2000	

REVISIONS

NO.	DATE	BY	BRIEF DESCRIPTION

STATE OF TENNESSEE
DEPARTMENT OF TRANSPORTATION

DETAILS
INTERSTATE 40 OVER
JO JOHNSON ST
BRIDGE NO. 19-I40-16.86
DAVIDSON COUNTY
2000

BR-46-104

DESIGNED BY	T.MACKIE	DATE	05/2000
DRAWN BY	SCOTT C. NELSON	DATE	05/2000
SUPERVISED BY	W.SEGER & T.CHRISTIANSON	DATE	05/2000
CHECKED BY	W.SEGER & T.MACKIE	DATE	05/2000

FED ROAD DIST NO	STATE	FED AID PROJ NO	FISCAL YEAR	SHEET NO	TOTAL SHEETS
3	TENN	140-4(10)208	1968	89	360

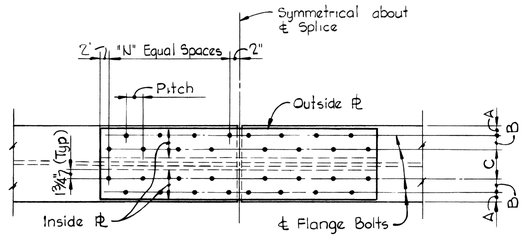

VIEW A-A

Flange Splice - TYPE B
Scale: 3/4" = 1'-0"

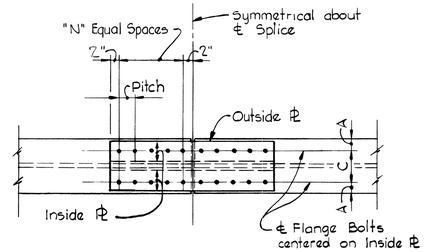

VIEW B-B

Flange Splice - TYPE A
Scale: 3/4" = 1'-0"

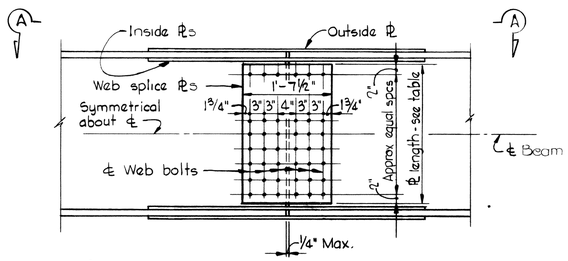

BEAM SPLICE DETAIL

Web Splice - TYPE B
Scale: 3/4" = 1'-0"

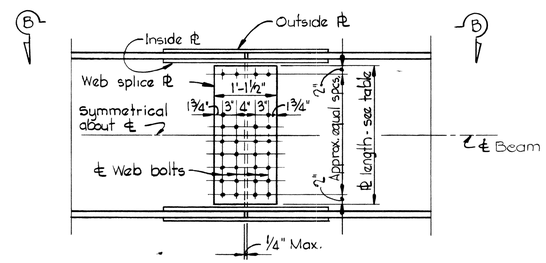

BEAM SPLICE DETAIL

Web Splice - TYPE A
Scale: 3/4" = 1'-0"

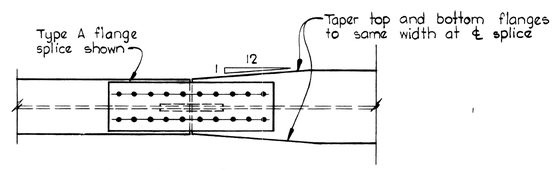

VIEW B-B

Splice detail for beams having different flange widths
Scale: 3/4" = 1'-0"

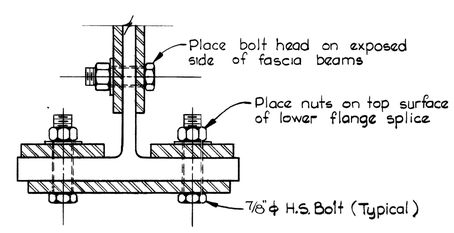

BOLT DETAIL

Scale: 3" = 1'-0"

BEAM SPLICE DATA

Beam		Flange Splice: Flange Plates: Outside (2 required) TYPE	Outside	Inside (4 required)	Flange Bolts: Number	N Spa.	Dimensions (inches): Pitch	A	B	C	Web Splice: TYPE	Web Plates (2 required)	Web Bolts No.	Weight of splice material * lbs
36 WF	280	B	16" x 13/16" x 8'-3"	6½" x 1" x 8'-3"	112	13	3½"	2 1/16	3	6½	B	19½" x 7/16" x 2'-7"	60	1720#
	260	B	16" x 3/4" x 7'-8"	6½" x 9/16" x 7'-8"	104	12	3½"	2	3	6½	B	19½" x 7/16" x 2'-7"	60	1520
	245	B	16" x 11/16" x 7'-1"	6½" x 7/8" x 7'-1"	96	11	3½"	2	3	6½	B	19½" x 7/16" x 2'-7"	54	1320
	230	B	16" x 11/16" x 7'-1"	6½" x 9/16" x 7'-1"	96	11	3½"	2	3	6½	B	19½" x 7/16" x 2'-7"	54	1290
	194	A	11" x 3/4" x 4'-2"	4½" x 9/16" x 4'-2"	64	7	3"	2 9/16	–	7	B	19½" x 7/16" x 2'-7"	54	700
	182	A	11" x 11/16" x 4'-2"	4½" x 7/8" x 4'-2"	64	7	3"	2 9/16	–	7	B	19½" x 3/8" x 2'-7"	54	640
	170	A	11" x 5/8" x 3'-8"	4½" x 9/16" x 3'-8"	56	6	3"	2½	–	7	B	19½" x 3/8" x 2'-7"	54	550
	160	A	11" x 9/16" x 3'-8"	4½" x 3/4" x 3'-8"	56	6	3"	2½	–	7	B	19½" x 3/8" x 2'-7"	54	520
	150	A	11" x 9/16" x 3'-2"	4½" x 11/16" x 3'-2"	48	5	3"	2½	–	7	B	19½" x 3/8" x 2'-7"	48	450
	135	A	11" x 1/2" x 2'-8"	4½" x 5/8" x 2'-8"	40	4	3"	2½	–	7	B	19½" x 3/8" x 2'-7"	48	380
33 WF	152	A	10" x 9/16" x 3'-8"	4" x 7/8" x 3'-8"	56	6	3"	2 11/16	–	6¼	B	19½" x 3/8" x 2'-4"	42	510
	141	A	10" x 9/16" x 3'-2"	4" x 13/16" x 3'-2"	48	5	3"	2 5/8	–	6¼	B	19½" x 3/8" x 2'-4"	42	430
	130	A	10" x 1/2" x 2'-8"	4" x 3/4" x 2'-8	40	4	3"	2 5/8	–	6¼	B	19½" x 3/8" x 2'-4"	42	370
	118	A	10" x 7/16" x 2'-8"	4" x 5/8" x 2'-8"	40	4	3"	2 5/8	–	6¼	A	13½" x 3/8" x 2'-4"	36	300
30 WF	132	A	10" x 9/16" x 3'-2"	4" x 3/4" x 3'-2"	48	5	3"	2¼	–	6	B	19½" x 3/8" x 2'-1"	42	410
	124	A	10" x 1/2" x 2'-8"	4" x 11/16" x 2'-8"	40	4	3"	2¼	–	6	B	19½" x 3/8" x 2'-1"	42	350
	116	A	10" x 7/16" x 2'-8"	4" x 5/8" x 2'-8"	40	4	3"	2¼	–	6	A	13½" x 3/8" x 2'-1"	32	290
	108	A	10" x 7/16" x 2'-2"	4" x 9/16" x 2'-2"	32	3	3"	2¼	–	6	A	13½" x 3/8" x 2'-1"	32	250
	99	A	10" x 3/8" x 2'-2"	4" x 1/2" x 2'-2"	32	3	3"	2¼	–	6	A	13½" x 3/8" x 2'-1"	32	230

* Includes an allowance for weight of bolts and washers

GENERAL NOTES

DESIGN SPECIFICATIONS: A.A.S.H.O. "Standard Specifications for Highway Bridges" dated 1965.

DESIGN UNIT STRESSES:
Structural Steel ASTM A-36 — 20,000 p.s.i. bending; 12,000 p.s.i. shear
High Strength Bolts ASTM A-325 — 13,500 p.s.i. shear; 40,000 p.s.i. bearing

FILLS: Fill plates shown on the project plans and shop drawings shall be dimensioned to the nearest 1/16" in thickness, but not less than 1/8" thick, based on the dimensions for detailing and intended relative position of the abutting flanges and webs to be spliced. In the final shop assembly, fills shall be furnished with thicknesses sufficient to compensate for any misalignment of abutting flanges and webs due to standard rolling mill tolerances. The clamping together of splice plates over material (including fills) that vary by more than 1/16" in thickness or relative position, at the centerline of the splice, will not be permitted.

VERTICAL CLEARANCE: For grade separation structures an allowance of 3/4" plus the thickness of the outside flange splice plate shall be used in computing the actual vertical clearance under a beam splice.

ERECTION: In the field erection of beams with bolted field splices, the beams shall be positioned to facilitate the placing of drift pins. Drifting done during erection shall be only such as to align the parts to be bolted and not to enlarge the holes or distort the metal. Heavy driving of drift pins will not be permitted.

FIELD ASSEMBLY: Splices are to be sub-punched or sub-drilled 1/4" smaller and reamed to size and match marked while assembled in the shop. In the final assembly of the parts to be bolted, drift pins shall be placed in a sufficient number of holes (not less than 25 percent for field erection) to provide and maintain accurate alignment of holes and parts, and sufficient bolts shall be installed and brought to a snug tight condition to bring the parts into complete contact. Bolts shall then be installed in any remaining open holes and tightened to a snug tight fit, after which all bolts shall be tightened completely by calibrated wrenches or by the turn-of-nut method. Drift pins shall then be replaced with bolts and tightened in the same manner.

BOLTS: Field connections shall be 7/8" ϕ high tensile strength bolts ASTM-A325 unless otherwise shown. See AASHO Specs. Art. 2.10.20. All field connections are friction type.

DESIGNED BY J.S.P. DATE Aug. '67
DRAWN BY F.R.O. DATE Aug. '67
TRACED BY F.R.O. DATE Aug. '67
CHECKED BY R.P.P. & C.S.M. DATE Aug. '67

STATE OF TENNESSEE
DEPARTMENT OF HIGHWAYS
NASHVILLE

STANDARD BOLTED BEAM SPLICE DETAILS

KNOERLE, BENDER, STONE & ASSOCIATES, INC.
NASHVILLE, TENN. BALTIMORE, MD.

CORRECT _____ BRIDGE ENGINEER
APPROVED _____ STATE HIGHWAY ENGINEER

K-80-1

MICROFILMED

FED ROAD DIST NO	STATE	FED AID PROJ NO	FISCAL YEAR	SHEET NO	TOTAL SHEETS
3	TENN	[illegible]	1968	90	360

Note:

When skew angle is less than 20°, studs shall be placed parallel to ℄ Brg. When skew angle is 20° or more studs shall be placed normal to ℄ beam or girder

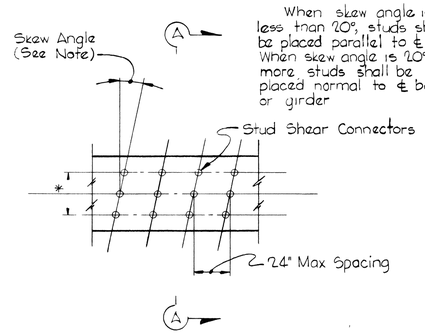

TYPICAL SHEAR CONNECTOR DETAILS

Scale: 1" = 1'-0"

* Note:

See bridge plans for number of studs per row.

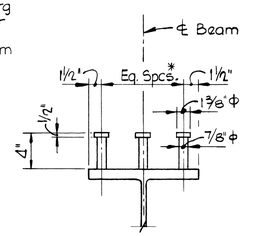

SECTION A A

Scale: 1½" = 1'-0"

Note 'A'.

Fillet weld sizes shall be in accordance with Article 1.7.27 of the AASHO Specifications (1965).

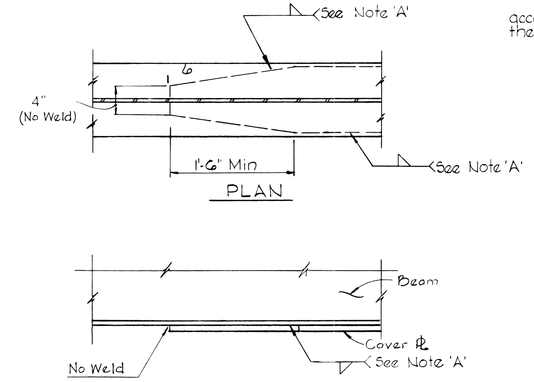

TYPICAL COVER PLATE DETAILS

No Scale

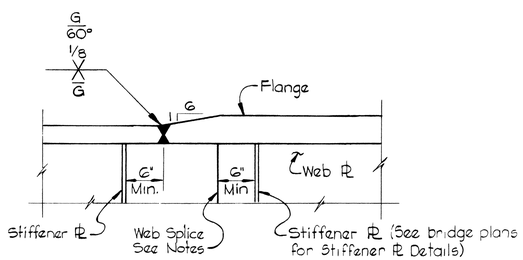

TYPICAL PLATE GIRDER SHOP SPLICE

No Scale

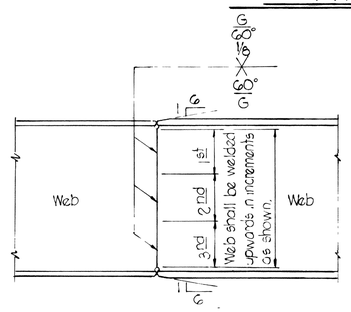

ELEVATION

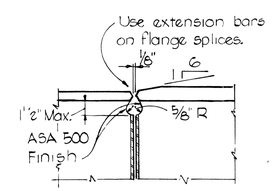

SECTION THRU FLANGE SPLICE

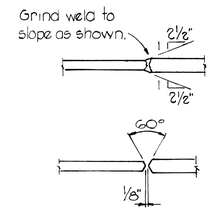

SECTION THRU WEB SPLICE

Leave web cope holes open. Remove extension bars and grind welds to a smooth finish after completion and cooling

EDGE PREPARATION

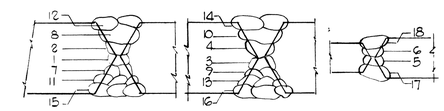

See Note 5.

BOTTOM FLANGE TOP FLANGE WEB

SEQUENCE OF PASSES

TYPICAL FIELD WELDED GIRDER SPLICE

No Scale

NOTES

1. Location of web splices and flange splices not indicated on design drawing shall be approved by the Engineer in writing.
2. Web splices to be full penetration butt weld. Grind to a flush surface on outside of fascia only.
3. Flange splices must be completed before flanges are welded to webs.
4. Each girder shall be so fabricated that the specified camber shall remain in the girder after all shop welding has been completed.
5. Girder end cuts, intermediate stiffeners, all cross-frame connection ℞'s and bearing stiffeners are to be set vertical under full dead load for girder slopes greater than 2%. For girder slopes equal to or less than 2% the Fabricator may, at his option, make the intermediate stiffeners and cross-frame connection ℞s either vertical under full dead load or perpendicular to the girder flanges, except that end cuts for all girders and all bearing stiffeners shall be vertical under full dead load.
6. Stud Shear Connectors See AASHO Specifications 2.10.3A and 2.10.23.

FIELD SPLICE NOTES

1. SHOP ASSEMBLY AND MARKING: Ends of girders to be welded shall be prepared in the shop taking into account their relative positions in the finished structure due to grade, camber and curvature. Each splice shall be completed, shop assembled, checked and match-marked while assembled by stamping the metal. The surfaces to be field welded shall not be painted but shall receive a light coat of linseed oil.
2. FIELD ASSEMBLY: Splices shall be held with adjustable clamps so that proper horizontal and vertical fit-up can be made. Where guide bars and plates are required they must be shown on the approved erection drawings. Plates must be removed after erection and girder surfaces ground smooth.
3. WELDOR CERTIFICATION: All weldors shall be certified by an approved testing agency. Certification shall relate to type of joint and type and size of electrode. For girder splices the weldor shall be certified in the vertical and overhead position tests.
4. PROTECTION FROM MOISTURE: Welds must be protected from moisture from any source during welding and afterwards until parts welded have cooled to atmospheric temperature.
5. WELDING PROCEDURE: A balanced welding sequence should be followed similar to that shown above. The number of passes shall be shown in the welding procedure along with the size of electrodes. A preheat of 300°F shall be maintained on the flanges while the surface passes are being made on the web. A complete welding procedure shall be submitted to the Engineer for approval. Low hydrogen electrodes shall be used.

   The Contractor may submit an alternate welded flange splice for approval in his welding procedure. This may be a single vee groove with a backing strip and extension bars. This type joint must be qualified for this project. Qualification tests shall be made by an independent agency acceptable to the Highway Department. Costs of these tests shall be borne by the Contractor.
6. RADIOGRAPHIC INSPECTION OF GIRDER FIELD SPLICES: 100 percent of all flange butt welds and the top and bottom 1/8 of web butt welds shall be radiographed. At the start of erection, no more than two splices shall be made prior to radiographic evaluation.

   The full costs of all radiographs, including those to check defective work, will be borne by the Contractor and shall be included in the price bid for Steel Structures.

   This inspection shall be made by an independent commercial testing agency acceptable to the Highway Department.

DESIGNED BY	JSP	DATE	
DRAWN BY	FNO & GAC	DATE	Aug '67
TRACED BY	FNO & GAC	DATE	Aug '67
CHECKED BY	RPR & CSM	DATE	Aug '67

STATE OF TENNESSEE
DEPARTMENT OF HIGHWAYS
NASHVILLE

TYPICAL STANDARD STEEL DETAILS

KNOERLE, BENDER, STONE & ASSOCIATES, INC.
NASHVILLE, TENN. BALTIMORE, MD.

CORRECT _____ BRIDGE ENGINEER

APPROVED _____ STATE HIGHWAY ENGINEER

K-80-2

FED ROAD DIST NO	STATE	FED AID PROJ NO	FISCAL YEAR	SHEET NO.	TOTAL SHEETS
3	TENN.	I-40-4(20)208	1968	91	360

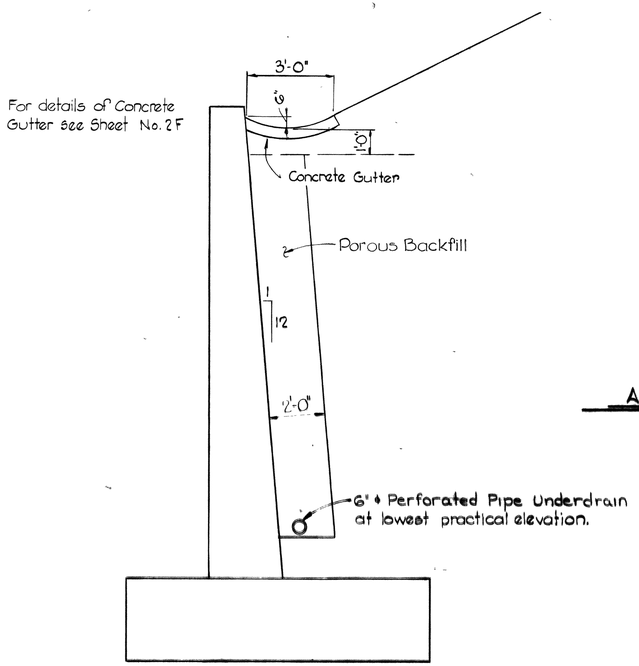

RETAINING WALLS WITH SLOPING BACKFILL

Scale: 3/8" = 1'-0"

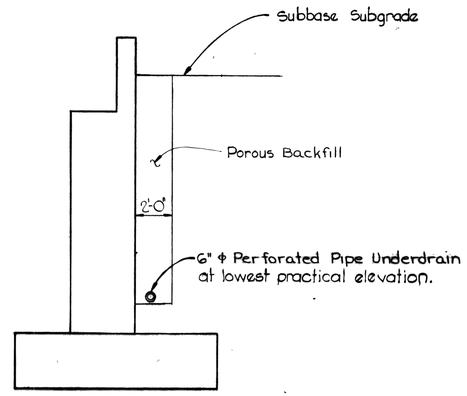

ABUTMENTS AND RETAINING WALLS WITH LEVEL BACKFILL

Scale: 1/4" = 1'-0"

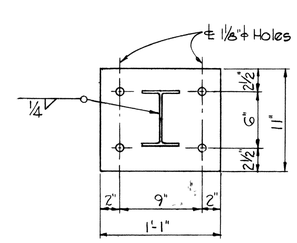

PLAN

Note:
For detail of Guard Rail see Tennessee Standard Drawing RD-R-G. 1

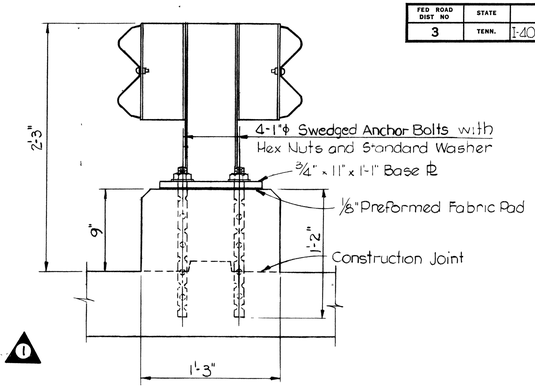

ELEVATION

BASE PLATE DETAILS FOR MEDIAN GUARD RAIL ON STRUCTURE

Scale: 1½" = 1'-0"

Note: Expansion Joint keys are to extend to within one foot of the top of walls. Keyways are not to be in Parapet Joints.

* Rubber Waterstops may be used in lieu of copper waterstops at the option of the Contractor. See Special Provision regarding Rubber Waterstops.

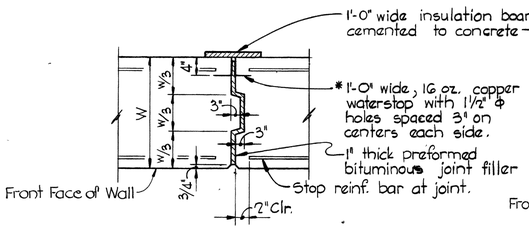

EXPANSION JOINT

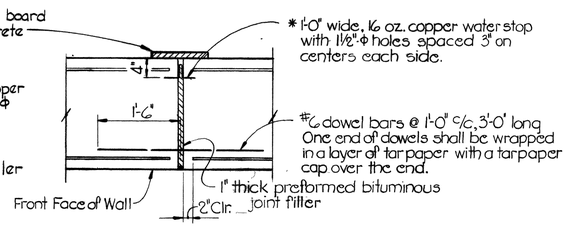

CONSTRUCTION JOINT

VERTICAL JOINTS

Scale: 3/4" = 1'-0"

Note: The cost of the preformed bituminous joint filler, dowel bars, copper flashing and insulation board shall be included in the unit price bid for Class 'A' Concrete.

Note:
Underdrains to be located where shown on the Plans or directed by the Engineer.

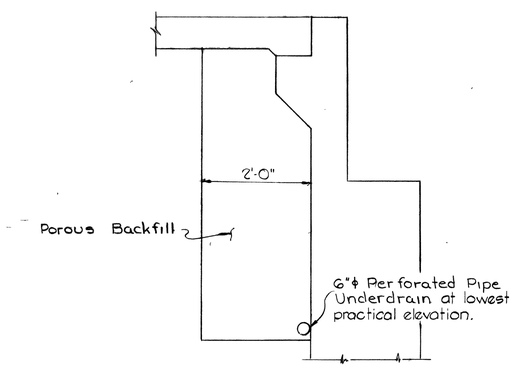

SECTION

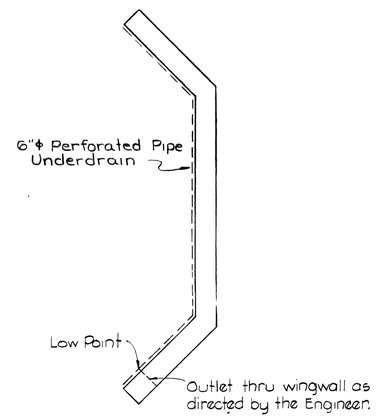

PLAN

ABUTMENTS WITH APPROACH SLABS

No Scale

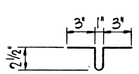

EXPANSION JOINT

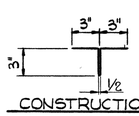

CONSTRUCTION JT.

COPPER WATERSTOPS

Scale: 1½" = 1'-0"

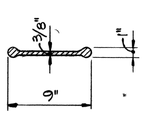

RUBBER WATERSTOP

Scale: 1½" = 1'-0"

REVISION 1 6-2-69 D.W.F.

DESIGNED BY J.S.P. DATE
DRAWN BY F.R.O. DATE
TRACED BY F.R.O. DATE
CHECKED BY R.P.P. & C.S.M. DATE Aug. '67

STATE OF TENNESSEE
DEPARTMENT OF HIGHWAYS
NASHVILLE

STANDARD ABUTMENT AND RETAINING WALL DETAILS

KNOERLE, BENDER, STONE & ASSOCIATES, INC.
NASHVILLE, TENN. BALTIMORE, MD.

CORRECT _____ BRIDGE ENGINEER
APPROVED _____ STATE HIGHWAY ENGINEER

K-80-3

FED ROAD DIST. NO	STATE	FED AID PROJ NO	FISCAL YEAR	SHEET NO.	TOTAL SHEETS
3	TENN.	I-40-4(20)208	1968	92	360

1 6-2-69 D.W.F. Revision of Guardrail Attachment.

2 3-2-70 D.P.H Wingpost & Guardrail Attachment

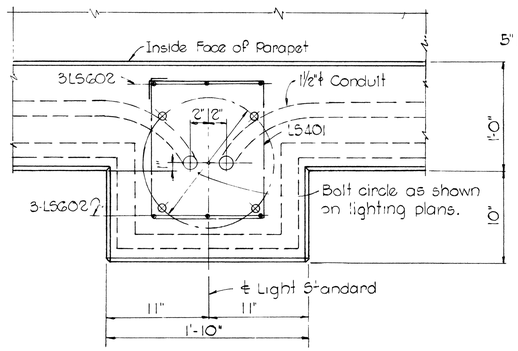

PLAN

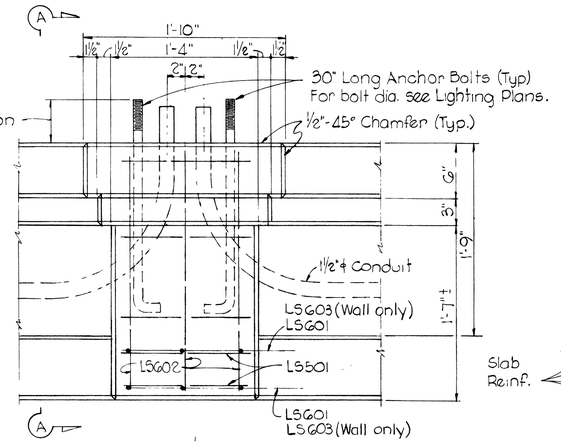

ELEVATION

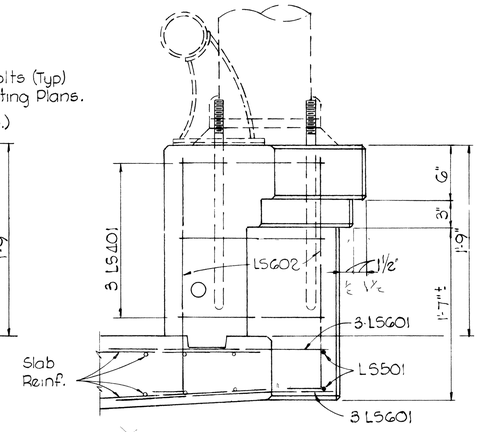

SECTION AA
(BRIDGE SECTION)

Note
All dimensions & reinforcing are for Bridge & Wall Light St'd except as noted.

LIGHT STANDARD BASE DETAILS

Scale: 1½" = 1'-0"

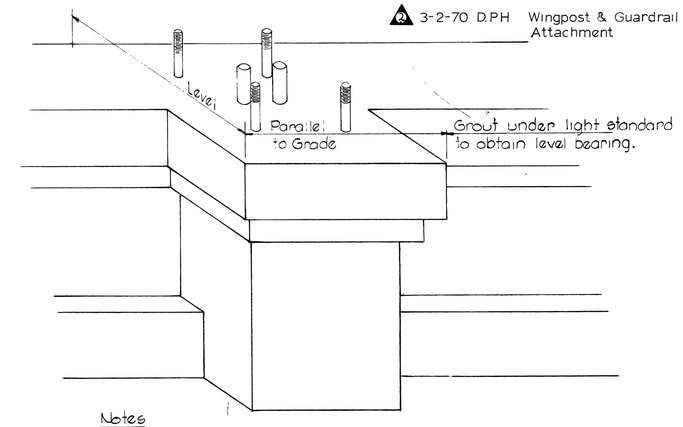

Notes

1. See individual bridge plans for location of Light Standard Bases, if applicable.
2. Cost of Light Standard Base including concrete and reinforcing steel to be included in the price bid for Bridge Railing.
3. For additional lighting details see Sheet 90.
4. For Bridge Railing see Tennessee Standard Drawing K-38-154.

ESTIMATED QUANTITIES FOR ONE LIGHT STANDARD BASE

CLASS 'A' CONCRETE-CU.YDS.		REINFORCING STEEL - LBS.	
Bridge Light Standard	Retaining Wall Light Standard	Bridge Light Standard	Retaining Wall Light Standard
0.10	0.08	85.20	57.41

Bar Details ①

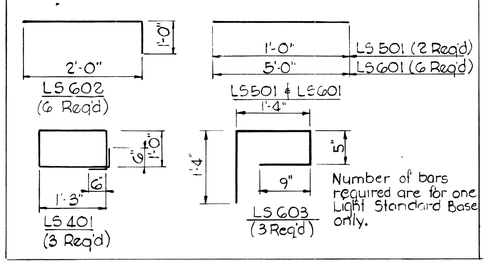

Number of bars required are for one Light Standard Base only.

① Bar dimensions are outside to outside. First digit of number indicates size.

Note Spacer, Insert & Bolt to be cast in place.

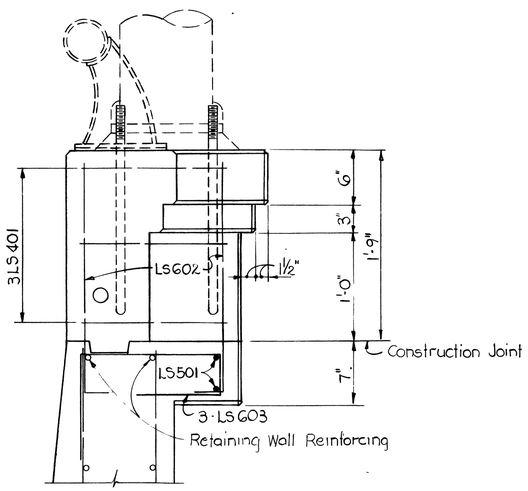

Note.
For Plan & Elevation Views see Light Standard Base Details this drawing.

SECTION A-A
(RETAINING WALL SECTION)

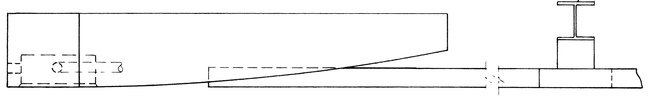

See Detail 'A' showing anchorage of Guardrail Posts on wingwall extensions. See Detail 'B' for Guardrail Post Base ℞ details.

PLAN

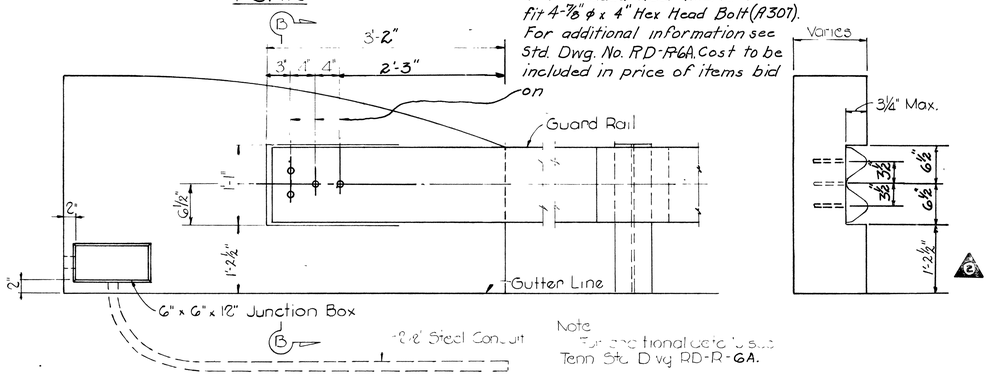

Note
For additional details see Tenn. Std. Dwg. RD-R-6A.

ELEVATION

SECTION B-B

DETAIL OF RAIL ATTACHMENT TO BRIDGES WITHOUT CURBS

Scale: 1" = 1'-0"

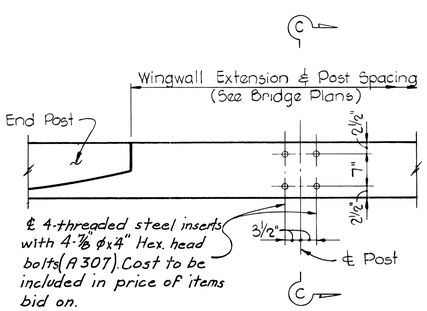

DETAIL 'A'

Scale: ¾" = 1'-0"

NOTE: For additional information on guardrail attachment see std. dwg. RD-R-6A.

NOTE: Inserts to be set by Bridge Contractor.

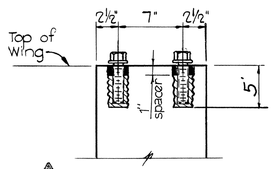

SECTION C-C

Scale: 1½" = 1'-0"

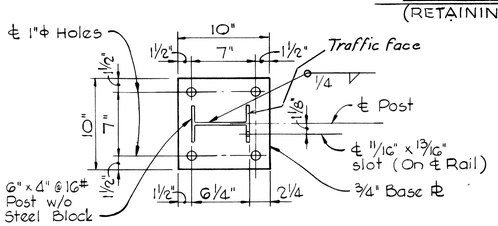

DETAIL 'B'

Scale: 1½" = 1'-0"

STATE OF TENNESSEE
DEPARTMENT OF HIGHWAYS
NASHVILLE

STANDARD DETAILS
LIGHT STANDARD BASE &
GUARD RAIL ATTACHMENT

KNOERLE, BENDER, STONE & ASSOCIATES, INC.
NASHVILLE, TENN. BALTIMORE, MD.

CORRECT _____ BRIDGE ENGINEER
APPROVED _____ STATE HIGHWAY ENGINEER

K-80-4

DESIGNED BY	G/AC	DATE	Aug. '67
DRAWN BY	G/AC	DATE	Aug. '67
TRACED BY		DATE	
CHECKED BY	CSM	DATE	Aug. '67

MICROFILMED

FED ROAD DIST NO	STATE	FED AID PROJ NO	FISCAL YEAR	SHEET NO	TOTAL SHEETS
3	TENN	I-40-4(20) 208	1968	95	360

1. 6-2-69 D.W.F Est Quantity Note
2. 7-23-69 J.S.P. Est. Quantities, Crash Wall Elevations, General Notes
3. 3-2-70 D.P.H Insert note
4. 7-30-71 C.F.C Revised Quan. Block for Reinf. Conc Med Barrier

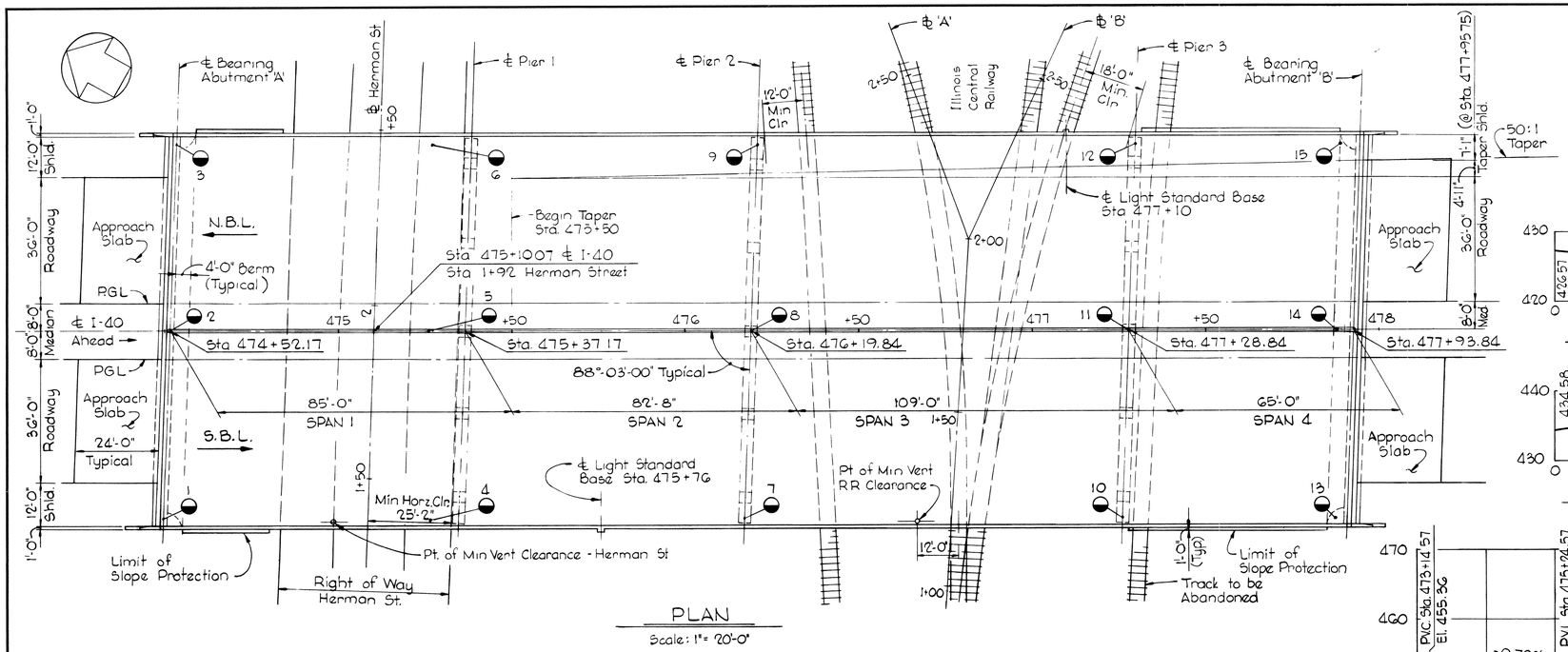

PLAN

Scale: 1" = 20'-0"

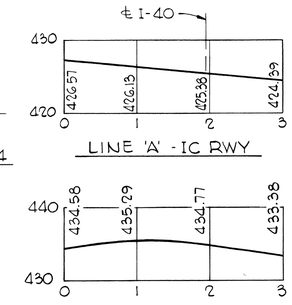

LINE 'A' - IC RWY

HERMAN ST.

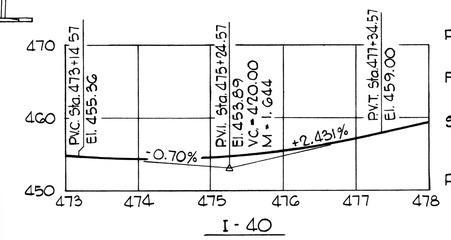

I-40

PROFILE GRADE LINES

Scale: Horizontal 1" = 100'
Vertical 1" = 10'

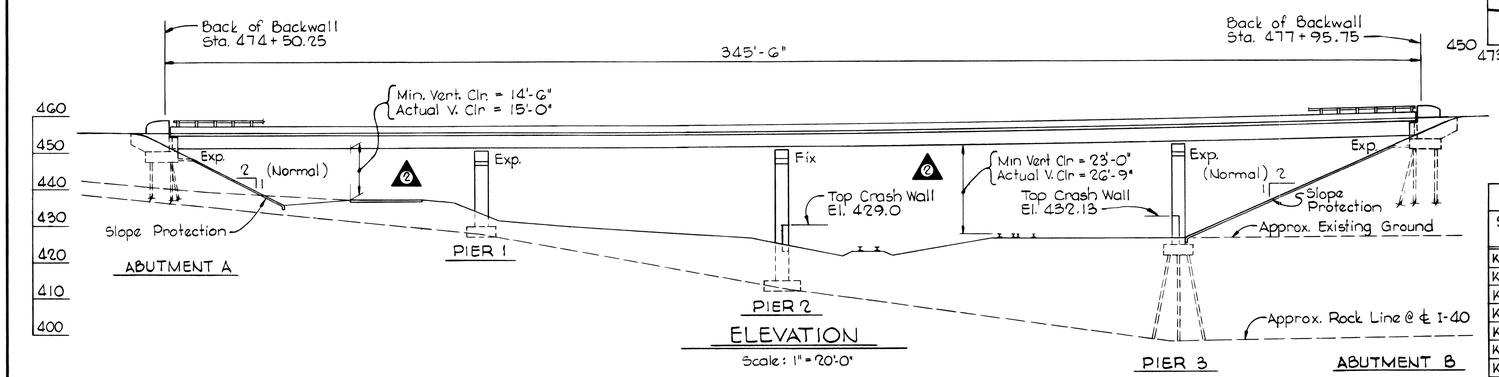

ELEVATION

Scale: 1" = 20'-0"

GENERAL NOTES

SPECIFICATIONS:
General - Tennessee Department of Highways "Road and Bridge Specifications" 1951 Edition and the Supplemental Specifications and Special Provisions.
Design - A.A.S.H.O. Standard Specifications for Highway Bridges 1965 Edition with Addenda.
Capacity - HS 20-44 Loading and the B.P.R. modified loading for military vehicles.

CONCRETE:
All concrete shall be Class 'A'. Chamfer all exposed edges of concrete 1" x 1" unless otherwise shown or noted.

FOUNDATIONS:
The foundations of Abutments and Pier 3 shall be on piles.
Pile foundations shall be excavated to the pile cut-off elevations shown, rod soundings shall then be made as directed by the Engineer. From the results obtained, the Bridge Engineer will decide if piles will be used or the footings carried to rock. The cost of rod soundings shall be included in the price of items bid on.
After excavation to rock for footings has been completed, holes 6' deep shall be drilled at points designated by the Engineer. From the results obtained, the Engineer shall determine final footing elevations. No reinforcing steel for Bent Columns shall be ordered until final footing elevations are determined.

REINFORCEMENT:
All reinforcing steel shall be A.S.T.M. A615. All reinforcing bar dimensions on the detail drawings are to the centerline of bar except where the clear distance is noted from face of concrete.

PILES:
All piles shall be 10 BP 42 and driven to refusal on rock on a minimum bearing of 55 tons @ Abutments & Pier 3. 2

FILLS:
Fills at bridge ends are to be in place and thoroughly compacted before driving piles for abutments.

STRUCTURAL STEEL:
Structural Steel shall conform to A.S.T.M. A 36 except for portions of beam indicated on beam elevations which shall conform to A.S.T.M. A588.

PAINT:
Basic Lead Silica Chromate. See Special Provisions regarding Section 132 Steel Structures (Painting). No paint shall be applied to the top surfaces of the top flanges. Splices and other field connections shall be cleaned and primed before forming slab.

WELDING:
Welding shall be in accordance with the current edition of the A.W.S. Specifications for Welded Highway and Railway Bridges. See Special Provisions regarding Welding Structures. Cost of Magnetic Particle Inspection to be included in cost of items bid on.

HIGH TENSILE BOLTS:
See notes on Dwg. K-80-12

STUD SHEAR CONNECTORS:
Stud shear connectors shall conform to the requirements of A.A.S.H.O. Standard Specifications for Highway Bridges Art. 2.10.3A & 2.10.23.

SHOP INSPECTION OF STEEL STRUCTURE:
The Contractor as soon as he receives his work orders, shall notify the Bridge Engineer, in writing, who will supply the structural steel and the location of the plant where it will be fabricated.

FABRICATION OF STRUCTURAL STEEL:
No fabrication shall be started until the materials involved have been approved by the Tennessee Highway Division of Tests.
Heat numbers on main material must be preserved or transferred during fabrication and shop painting so that they will be identifiable in the field.

LIGHTING: For details of Light Standards and Conduits, see Dwg. K-80-8 and Sheet 84.

BRIDGE RAILING:
Build bridge railing according to Standard Drawing K-38-154A.
Lt. Parapet - Dimension X = 1'-0" N= 33 Spaces, L= 10'-4"
Rt. Parapet - Dimension X = 1'-0" N= 33 Spaces, L= 10'-4"

DESIGN STRESSES:
Concrete $f'c$ = 1200 p.s.i. $f'c$ = 3000 p.s.i.
Reinforcing Steel fs = 20,000 p.s.i.
Structural Steel (A-36) Fs = 20,000 p.s.i., (A-588) Fs = 27,000 p.s.i.

Roadway Width = 112'-0"

INDEX OF DRAWINGS

SHEET NO.	TITLES
K-80-5	General Plan and Elevation
K-80-6	Abutment 'A'
K-80-7	Abutment 'B'
K-80-8	Light Standard Base & Wingpost Details
K-80-9	Pier 1
K-80-10	Piers 2 & 3
K-80-11	Framing Plan
K-80-12	Slab Plan
K-80-13	Reinforcing Steel Schedule
K-80-1	Standard Bolted Beam Splice Details
K-80-2	Typical Standard Steel Details
K-80-3	Standard Abutment and Retaining Wall Details
K-38-154A	Bridge Railing
K-38-155	Bearing Details
K-56-34	Standard Roadway Expansion Device & Steel Pile Splice.

Boring No.	Station	Offset	Ground Elevation	Rock Elevation
1	474+51	54' Rt.	439.7	435.7
2	474+52	℄	438.6	436.6
3	474+53	54' Lt.	437.6	422.6
4	475+25	54' Rt.	434.9	428.9
5	475+26	℄	433.9	427.9
6	475+27	54' Lt.	433.5	427.5
7	476+19	54' Rt.	423.1	413.1
8	476+20	℄	422.6	***
9	476+21	54' Lt.	422.4	***
10	477+27	54' Rt.	425.5	***
11	477+28	℄	424.8	398.8
12	477+29	54' Lt.	424.1	387.1
13	477+87	54' Rt.	424.9	396.9
14	477+88	℄	425.2	398.2
15	477+89	54' Lt.	424.3	405.3

◒ Denotes Boring Location
*** These Borings Inaccessable
Boring No. 3 - Old Quarry, 15' of fill.

2 ESTIMATED QUANTITIES 4

	Excavation Dry C.Y.	Excavation Rock C.Y.	Concrete Class A C.Y.	Reinforcing Steel Lbs	Steel Structures L.S.*	Bearing Piles (10BP42) L.F.	Bridge Railing L.F.	Linseed Oil Treatment Sq. Yds.**	Rock Drilling L.F.	Reinf. Conc Med. Barrier L.F.	Structure Lighting L.S.
Superstructure	–	–	909.8	251,530		–	686	4550	–	343	
Abutment 'A'	–	–	67.4	8,860		247	–	115	–	–	
Pier 1	134.0	18.0	126.6	24,150		–	–	–	30	–	
Pier 2	334.0	21.0	232.8	51,590		–	–	–	30	–	
Pier 3	173.0	–	230.8	36,360		1,046	–	–	–	–	
Abutment 'B'	–	–	67.6	8,340		1,007	–	115	–	–	
Total	641.0	39.0	1,635.0	380,830		2,300	686	4,780	60	343	Lump Sum

NOTES:
* Total Estimated Weight Steel Structures 812,000 lbs. includes Bearing Devices, Shear Connectors and Weld Materials.
** Special Provision on Linseed Oil Treatment does not applu to bent caps.
Cost of Bituminous Fiber Material to be included in items bid on.
Cost of 6"ϕ C.P.M.P. and Porous Backfill Material to be included in price of items bid on.
Cost of Light Standard Base including Concrete Reinforcing and Anchor Bolts to be included in price bid for Bridge Railing.
Lighting Lump Sum is for Complete installation of all Structural Lighting as shown on Plans.
Cost of 32-Threaded Steel Inserts & 32-7/8"ϕ x 4 Hex Head Bolts (A307), required for Abutment Wings, to be included in items bid on. 3

SPECIAL NOTE FOR RAILWAY CROSSING:
The Contractor shall conduct his work so as to protect the railway tracks and properties from damage. The work shall be done in accordance with regulations stipulated by the Illinois Central Railway Co., so as to maintain clearance and not interrupt traffic.

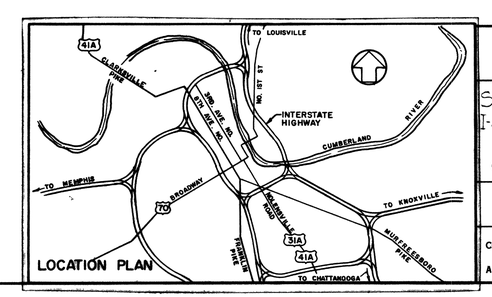

STATE OF TENNESSEE
DEPARTMENT OF HIGHWAYS
NASHVILLE

STRUCTURE NO. 21 AT STA. 475+10 ℄ I-40
I-40 OVER HERMAN ST. & ILL. CENTRAL R.R.
DAVIDSON COUNTY
GENERAL PLAN AND ELEVATION

KNOERLE, BENDER, STONE & ASSOCIATES, INC.
NASHVILLE, TENN. BALTIMORE, MD.

CORRECT _____ BRIDGE ENGINEER
APPROVED _____ STATE HIGHWAY ENGINEER

K-80-5

DESIGNED BY _____ DATE _____
DRAWN BY G.W.C. DATE _____
TRACED BY F.R.O DATE _____
CHECKED BY _____ DATE _____

MICROFILMED

FED. ROAD DIST. NO.	STATE	FED. AID PROJ. NO.	FISCAL YEAR	SHEET NO.	TOTAL SHEETS
3	TENN.	I-40-4(20)208	1968	96	360

1. 6-2-69 D.W.F. Guardrail Attachment and wingwall details
2. 7-23-69 J.S.P. Backwall Note
3. 2-27-70 D.P.H. Removed Insert Note

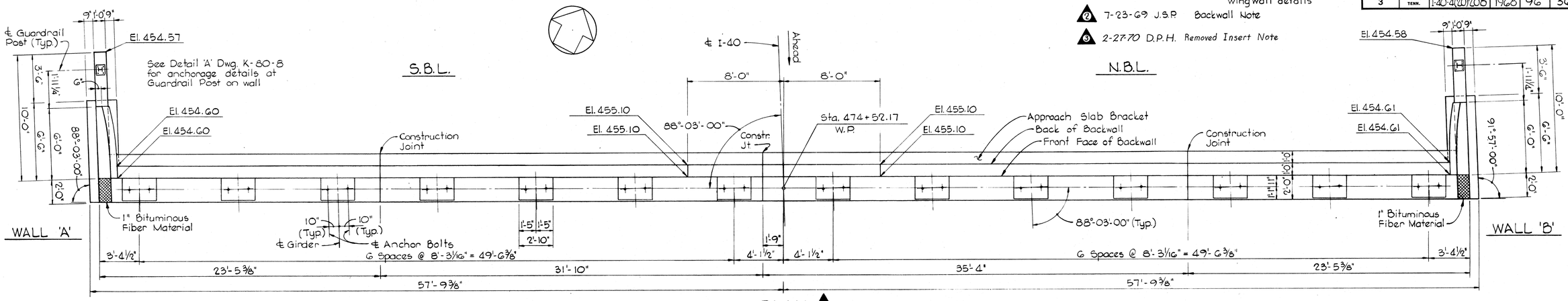

PLAN 1

Scale: 1/4" = 1'-0"

Note: For Construction Joint Details see Std. Dwg. K-80-3.

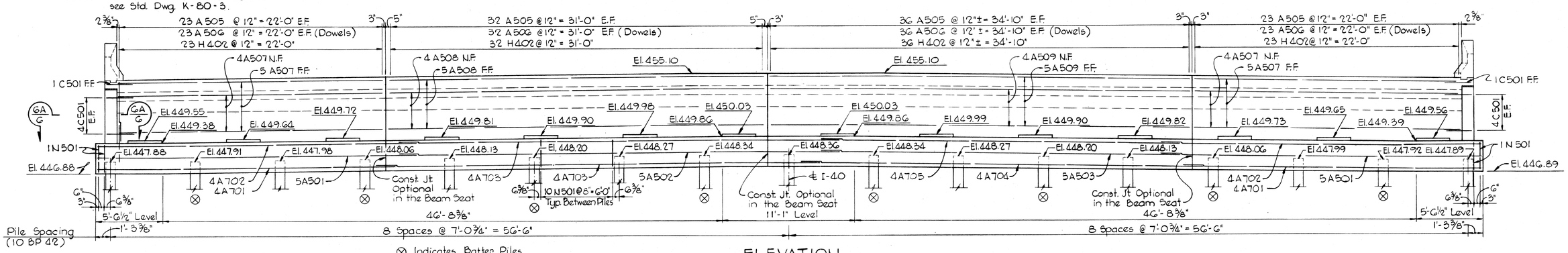

ELEVATION

Scale: 1/4" = 1'-0"

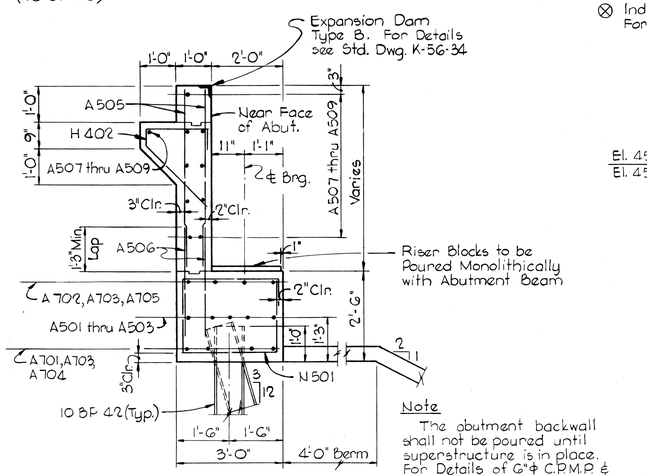

Note

The abutment backwall shall not be poured until superstructure is in place. For Details of 6" ϕ C.P.M.P. & porous backfill see Dwg. K-80-3

TYPICAL SECTION

ABUTMENTS 'A' AND 'B'

Scale: 1/2" = 1'-0"

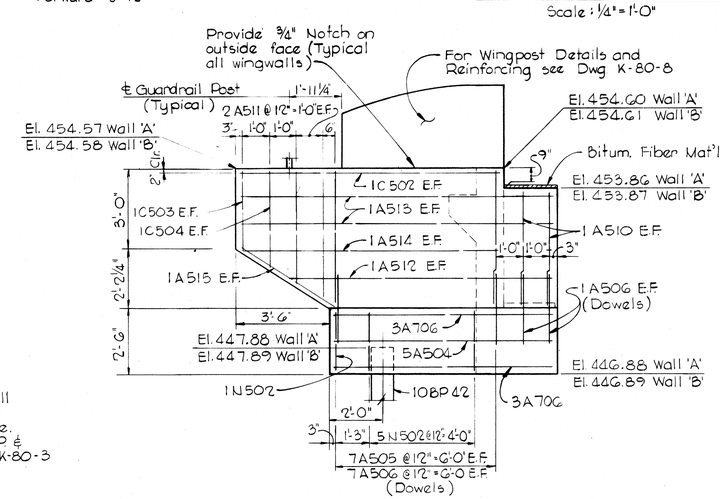

1 WALL 'A' & WALL 'B'

Scale: 3/8" = 1'-0"

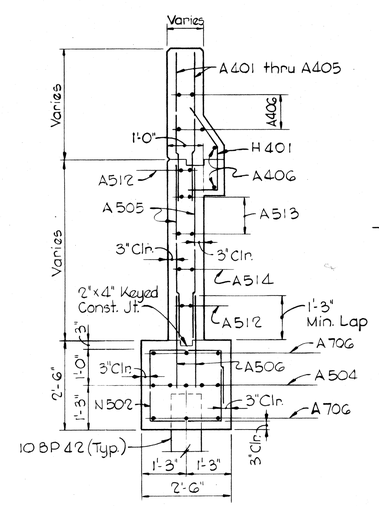

TYPICAL SECTION

WINGWALL

Scale: 1/2" = 1'-0"

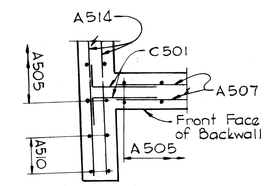

SECTION G A

Scale: 1/2" = 1'-0"

3. Top of backwall to conform to slope and grade of roadway.

Notes:

1. When pouring abutment beam seat, provisions shall be made for setting anchor bolts. If the Contractor elects to drill the holes for the anchor bolts, the reinforcing steel shall be placed so as not to interfere with the drilling. Bolt projection 4". Use Bearing Device ES 2 on Std. Dwg. K-38-155.
2. Apply Linseed Oil Treatment to the top surface and front face of abutment backwall, top surface of abutment seat, the vertical and top surfaces of wingwalls, the vertical and top surfaces of wing end posts.

* Includes Wingpost Quantities

* ESTIMATED QUANTITIES ABUTMENT 'A'	
CONCRETE CLASS 'A' C.Y.	REINFORCING STEEL LBS.
67.4	8,860

STATE OF TENNESSEE
DEPARTMENT OF HIGHWAYS
NASHVILLE

STRUCTURE NO. 21 AT STA. 475+10 ℄ I-40
I-40 OVER HERMAN ST. & ILL. CENTRAL RR.
DAVIDSON COUNTY
ABUTMENT 'A'

KNOERLE, BENDER, STONE & ASSOCIATES, INC.
NASHVILLE, TENN. BALTIMORE, MD.

CORRECT _____ BRIDGE ENGINEER
APPROVED _____ STATE HIGHWAY ENGINEER

K-80-6

DESIGNED BY	P.L.T.	DATE	March, 1969
DRAWN BY	F.R.O.	DATE	March, 1969
TRACED BY	F.R.O.	DATE	March, 1969
CHECKED BY		DATE	

MICROFILMED

FED. ROAD DIST. NO.	STATE	FED. AID PROJ. NO.	FISCAL YEAR	SHEET NO.	TOTAL SHEETS
3	TENN.	I-40-4(20) 208	1968	97	360

1 6-2-69 D.W.F. Guardrail Attachment and Wingwall details

2 2-27-70 D.P.H. Removed Insert Note

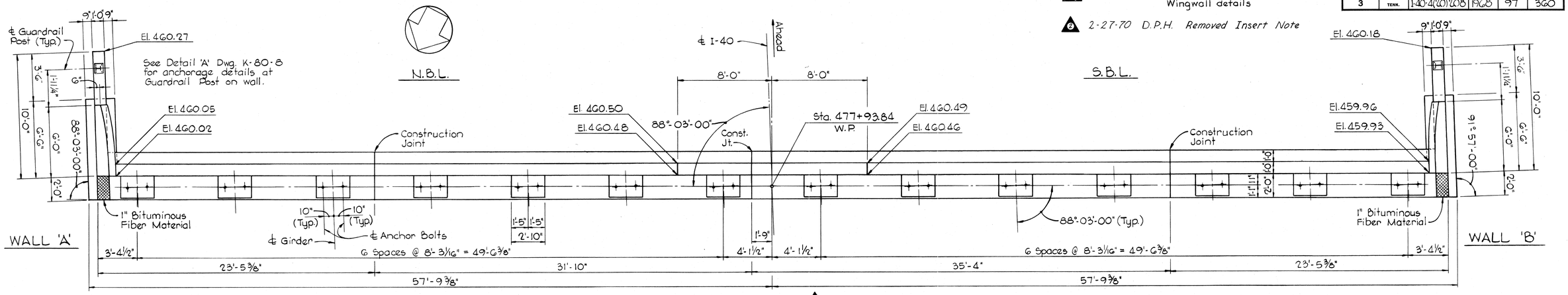

PLAN 1

Scale: 1/4" = 1'-0"

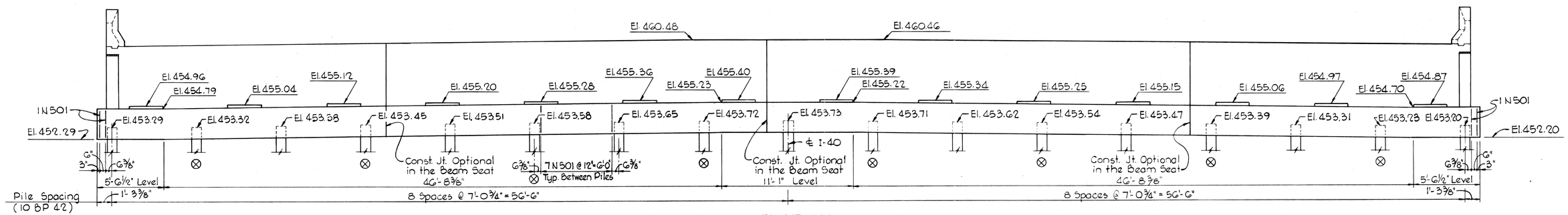

ELEVATION

Scale: 1/4" = 1'-0"

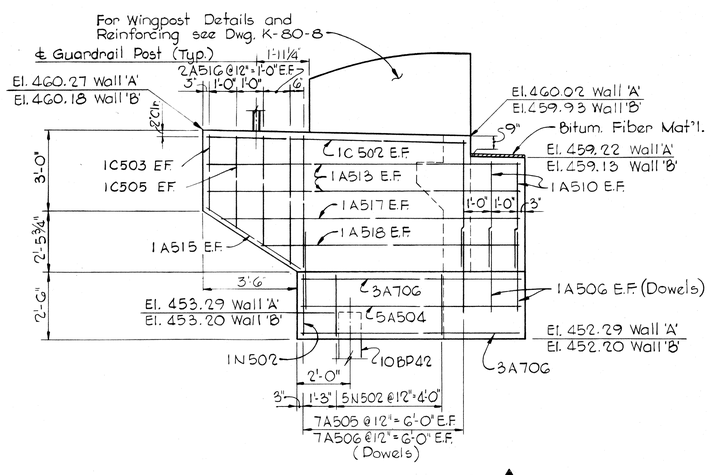

WALL 'A' & WALL 'B' 1

Scale: 3/8" = 1'-0"

Notes:

1. For Abutment Notes see Dwg. K-80-6.
2. For Reinforcing not shown see Dwg. K-80-6.

* Includes Wingpost Quantities

* ESTIMATED QUANTITIES ABUTMENT 'B'	
CONCRETE CLASS 'A' C.Y.	REINFORCING STEEL LBS.
67.6	8,340

2

DESIGNED BY	P.L.T.	DATE	March 1969
DRAWN BY	F.R.O.	DATE	March 1969
TRACED BY	F.R.O.	DATE	March 1969
CHECKED BY		DATE	

STATE OF TENNESSEE
DEPARTMENT OF HIGHWAYS
NASHVILLE

STRUCTURE NO. 21 AT STA. 475+10 ℄ I-40
I-40 OVER HERMAN ST. & ILL. CENTRAL RR.
DAVIDSON COUNTY
ABUTMENT 'B'

KNOERLE, BENDER, STONE & ASSOCIATES, INC.
NASHVILLE, TENN. BALTIMORE, MD.

CORRECT _____ BRIDGE ENGINEER
APPROVED _____ STATE HIGHWAY ENGINEER

K-80-7

MICROFILMED

FED. ROAD DIST. NO.	STATE	FED. AID PROJ. NO.	FISCAL YEAR	SHEET NO.	TOTAL SHEETS
3	TENN.	I-40-4(20)208	1968	98	360

1 6-2-69 D.W.F. Guardrail Attachment.

2 3-2-70 D.P.H. Wingpost & Guardrail Attachment

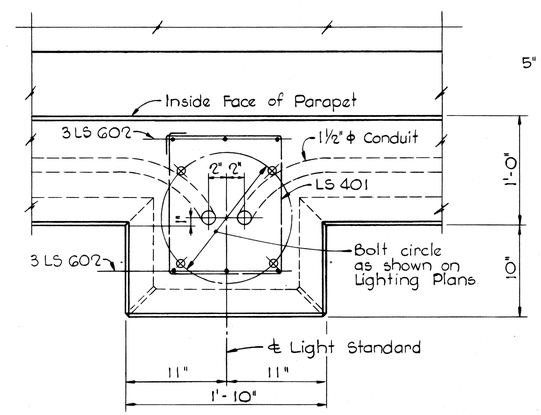

PLAN

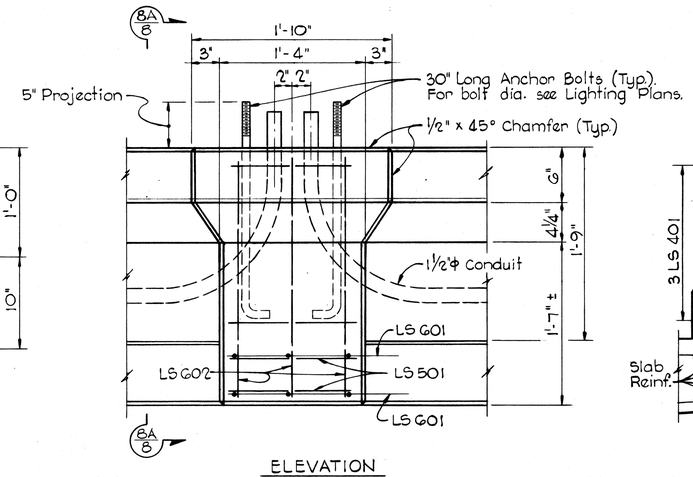

ELEVATION

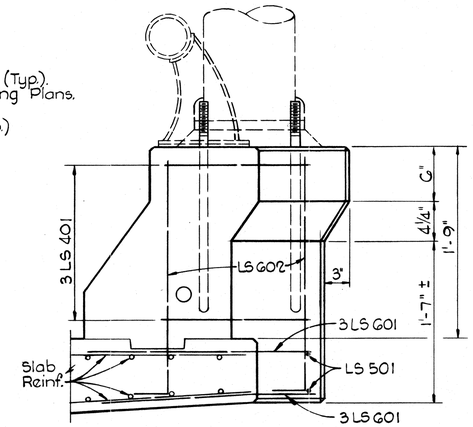

SECTION 8A

LIGHT STANDARD BASE DETAILS

Scale: 1½" = 1'-0"

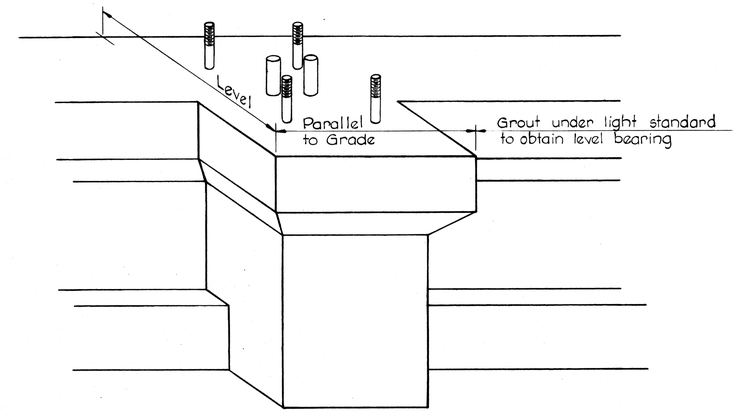

Notes:

1. See individual bridge plans for location of Light Standard Bases, if applicable.
2. Cost of Light Standard Base including concrete and reinforcing steel to be included in the price bid for Bridge Railing.
3. For additional lighting details see Sheet 81.
4. For Bridge Railing see Tennessee Standard Drawing K-38-154 A.

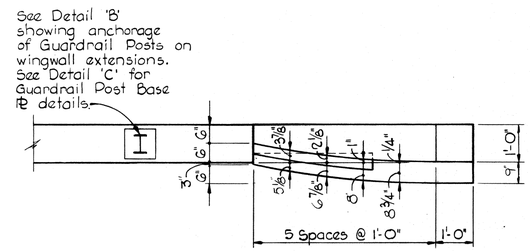

PLAN

Scale: ½" = 1'-0"

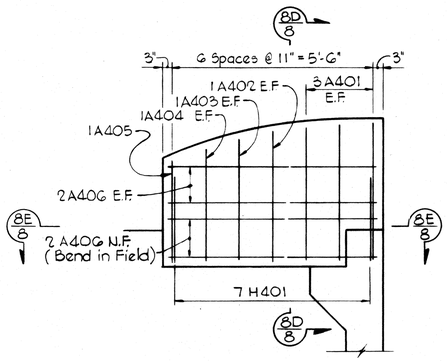

ELEVATION

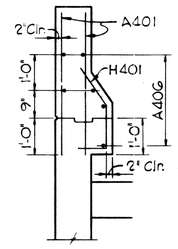

SECTION 8D

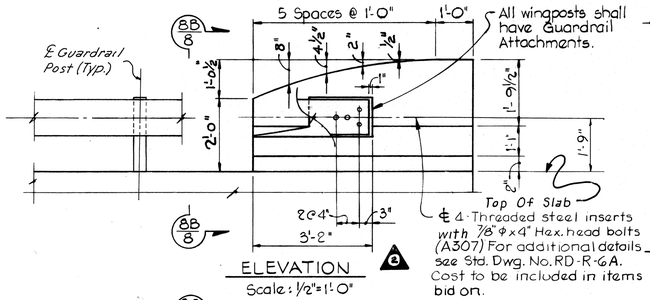

ELEVATION

Scale: ½" = 1'-0"

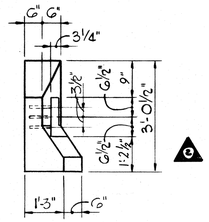

SECTION 8B

Scale: ½" = 1'-0"

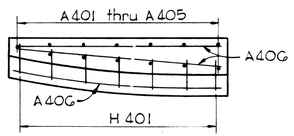

SECTION 8E

TYPICAL WINGPOST REINFORCING

Scale: ½" = 1'-0"

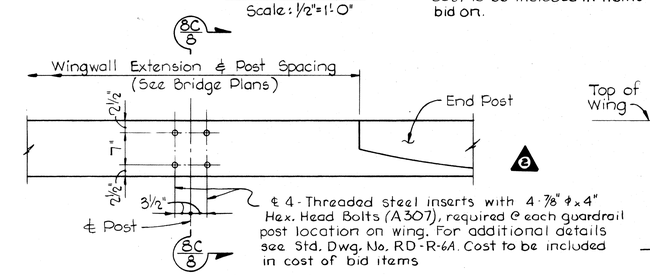

DETAIL 'B'

Scale: ¾" = 1'-0"

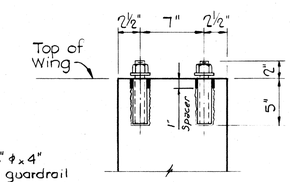

SECTION 8C

Scale: 1½" = 1'-0"

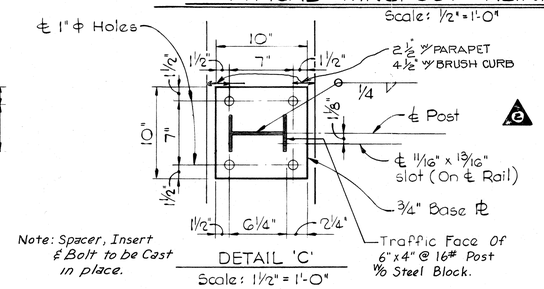

Note: Spacer, Insert & Bolt to be Cast in place.

DETAIL 'C'

Scale: 1½" = 1'-0"

ESTIMATED QUANTITIES FOR ONE LIGHT STANDARD BASE

CLASS 'A' CONCRETE - Cu. Yds.	REINFORCING STEEL - Lbs.

Bar Details ①

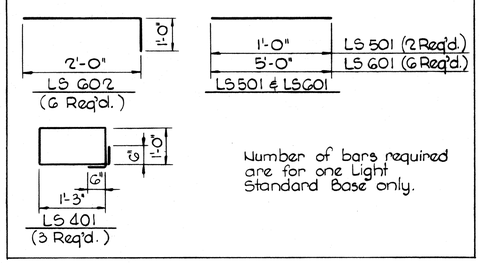

Number of bars required are for one Light Standard Base only.

① Bar dimensions are outside to outside. First digit of number indicates size.

TYPICAL WINGPOST & GUARDRAIL ATTACHMENT DETAILS

Scale: As Noted

1 Note: Inserts to be set by Bridge Contractor.

DESIGNED BY _____ DATE _____
DRAWN BY _____ DATE _____
TRACED BY _____ DATE _____
CHECKED BY _____ DATE _____

STATE OF TENNESSEE
DEPARTMENT OF HIGHWAYS
NASHVILLE

STRUCTURE NO. 21 AT STA. 475+10 ℄ I-40
I-40 OVER HERMAN ST. & ILL. CENTRAL R.R.
DAVIDSON COUNTY
LIGHT ST'D. BASE & WINGPOST DETAILS

KNOERLE, BENDER, STONE & ASSOCIATES, INC.
NASHVILLE, TENN. BALTIMORE, MD.

CORRECT _____ BRIDGE ENGINEER
APPROVED _____ STATE HIGHWAY ENGINEER

K-80-8

MICROFILMED

FED. ROAD DIST. NO.	STATE	FED. AID PROJ. NO.	FISCAL YEAR	SHEET NO.	TOTAL SHEETS
3	TENN.	I-40-4(20)208	1968	99	360

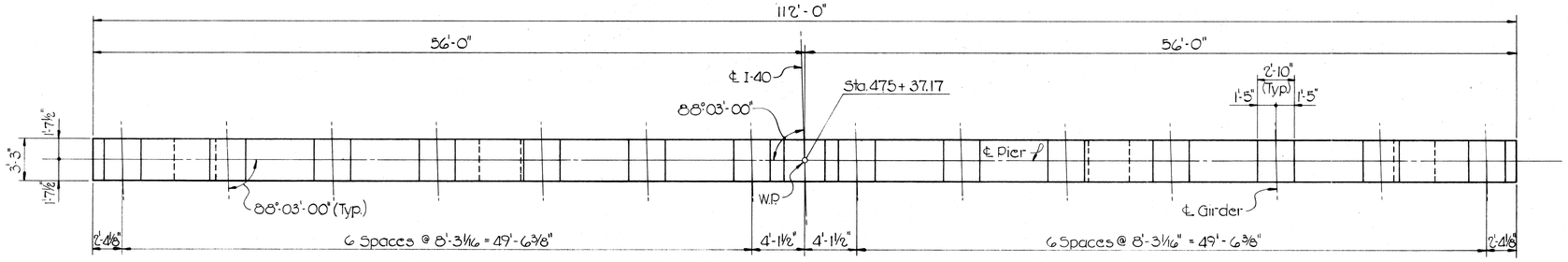

PLAN

Scale: 3/16" = 1'-0"

Notes:

1. When pouring pier cap, provisions shall be made for setting anchor bolts. If the contractor elects to drill holes for the anchor bolts the reinforcing steel shall be placed so as not to interfere with the drilling. Bolt projection 6". Use Bearing Device ES-4 on Standard Drawing K-38-155.
2. Column reinforcing steel to extend a minimum 2'-4" into cap beam and shall not be ordered until final footing elevations have been determined.
3. Bottom of footing to be set a minimum of 6" into rock.
4. Riser blocks to be poured monolithically with cap beam.

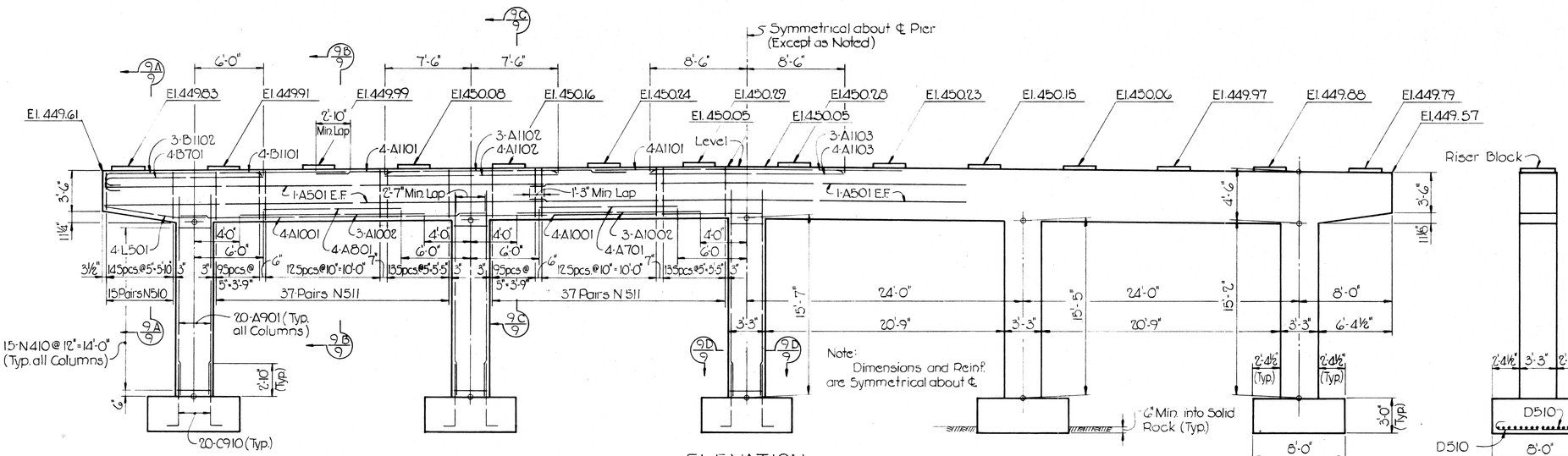

ELEVATION

Scale: 3/16" = 1'-0"

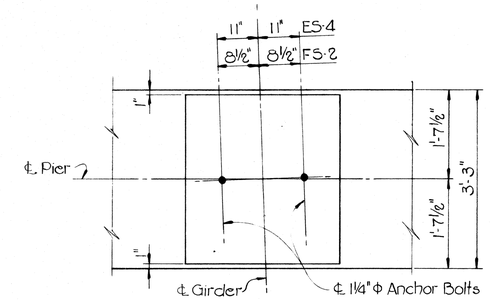

TYPICAL BEARING PAD DETAIL

Scale: 3/4" = 1'-0"

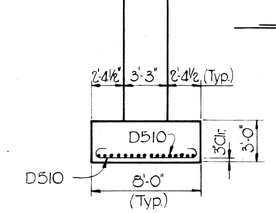

END ELEVATION

Scale: 3/16" = 1'-0"

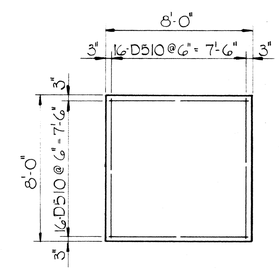

TYPICAL FOOTING PLAN

Scale: 1/4" = 1'-0"

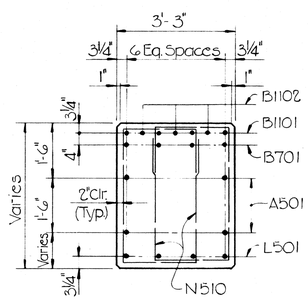

SECTION 9A

Scale: 1/2" = 1'-0"

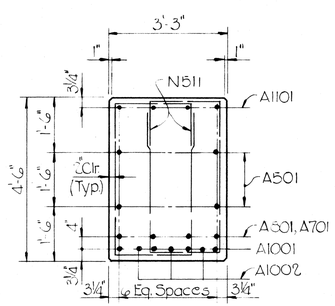

SECTION 9B

Scale: 1/2" = 1'-0"

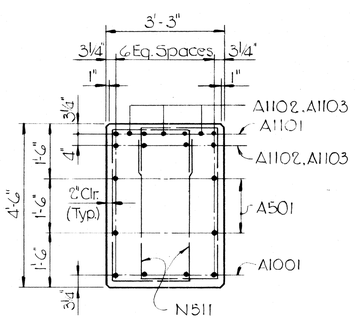

SECTION 9C

Scale: 1/2" = 1'-0"

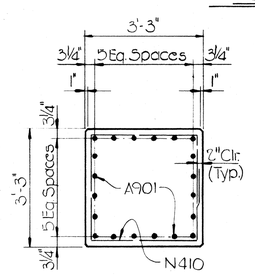

SECTION 9D

Scale: 1/2" = 1'-0"

ESTIMATED QUANTITIES	
Concrete Class 'A' C.Y.	Reinforcing Steel Lbs.
126.6	24,150

STATE OF TENNESSEE
DEPARTMENT OF HIGHWAYS
NASHVILLE

STRUCTURE NO. 21 AT STA. 475+10 ℄ I-40
I-40 OVER HERMAN ST. & ILL. CENTRAL R.R.
DAVIDSON COUNTY
PIER 1

KNOERLE, BENDER, STONE & ASSOCIATES, INC.
NASHVILLE, TENN. BALTIMORE, MD.

CORRECT _____ BRIDGE ENGINEER
APPROVED _____ STATE HIGHWAY ENGINEER

K-80-9

DESIGNED BY PLT DATE MARCH, 68
DRAWN BY NMS. DATE APRIL, 68
TRACED BY NMS. DATE APRIL, 68
CHECKED BY _____ DATE _____

MICROFILMED

FED. ROAD DIST. NO.	STATE	FED. AID PROJ. NO.	FISCAL YEAR	SHEET NO.	TOTAL SHEETS
3	TENN.	I-40-4(20)208	1968	100	360

2 7-23-69 J.S.P. Crash Wall Elev., Dim. & Reinf. Pier 3, & Est. Quantities

Notes:

1. When pouring pier cap, provisions shall be made for setting anchor bolts. If the contractor elects to drill holes for the anchor bolts the reinforcing steel shall be placed so as not to interfere with the drilling.
   Pier 2 - Bolt Projection 4". Use Bearing Device F5-2.
   Pier 3 - Bolt Projection 6". Use Bearing Device E5-4. For Bearing Device Details see Standard Drawing K-38-155.
2. Column reinforcing steel to extend a minimum 2'-10" Pier 2 and 2'-4" Pier 3 into cap beam and shall not be ordered until final footing elevations have been determined.
3. Bottom of footings, Pier 2, to be set a minimum of 6" into rock.
4. Riser blocks to be poured monolithically with cap beam.
5. For dimensions, reinforcing and details of pier cap see Dwg. K-80-9
6. For Bearing Pad Details see Dwg. K-80-9.

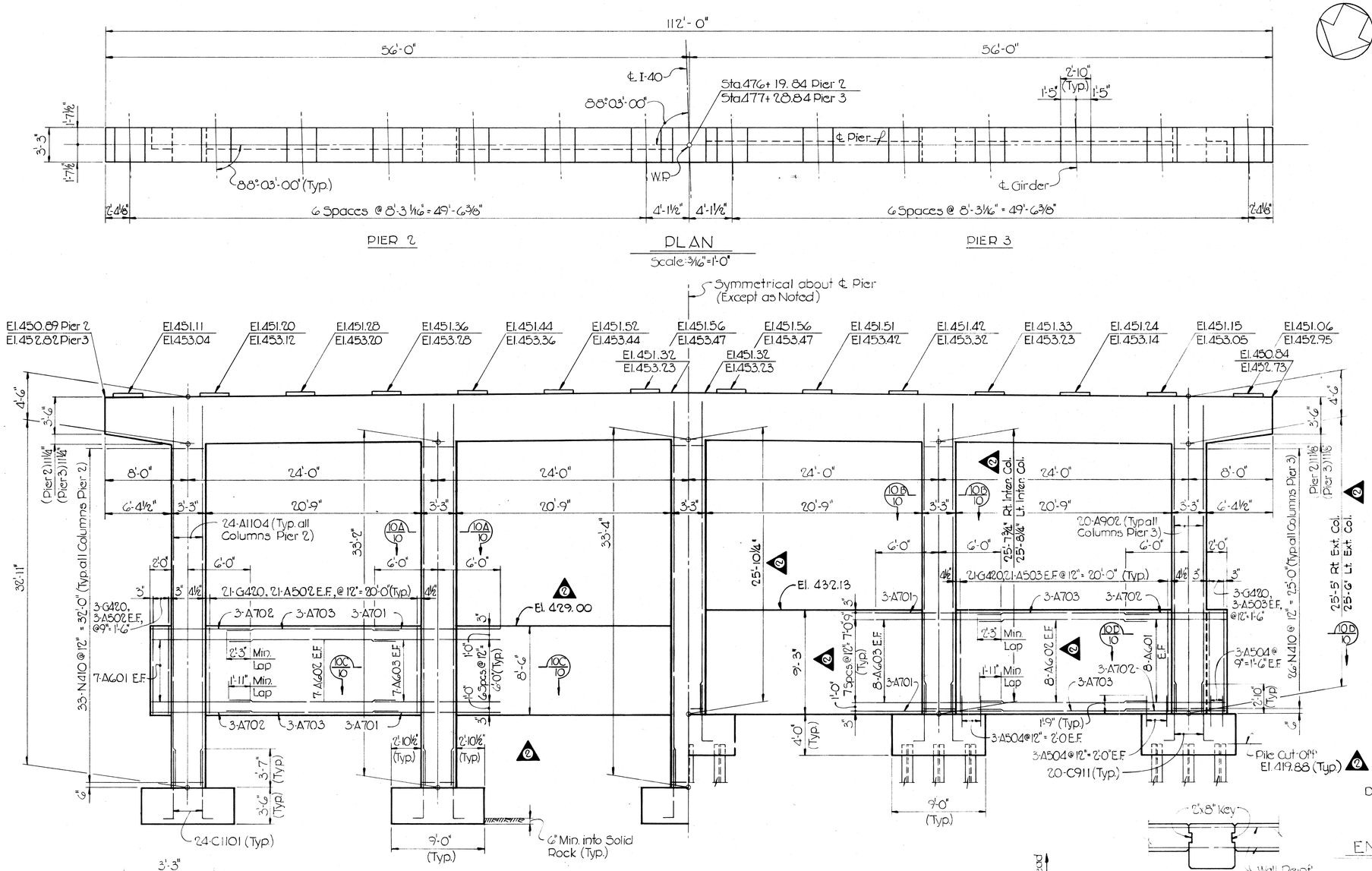

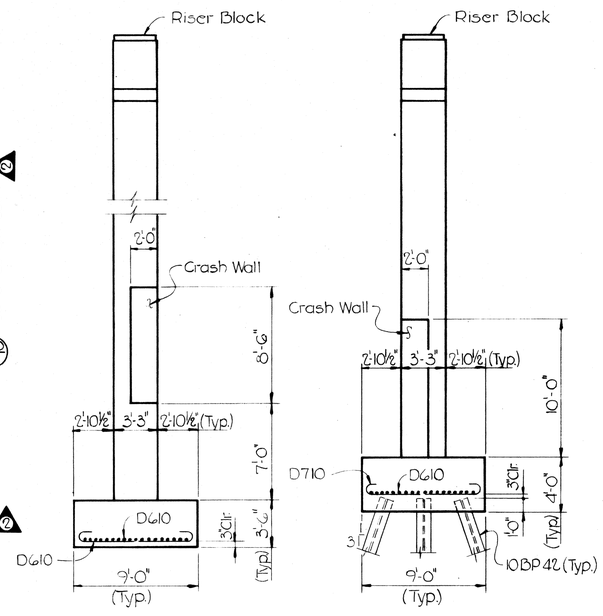

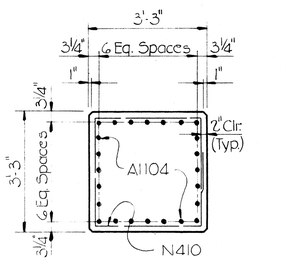

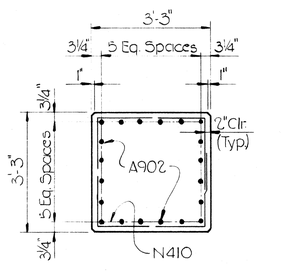

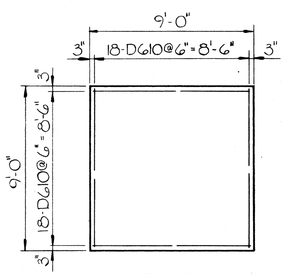

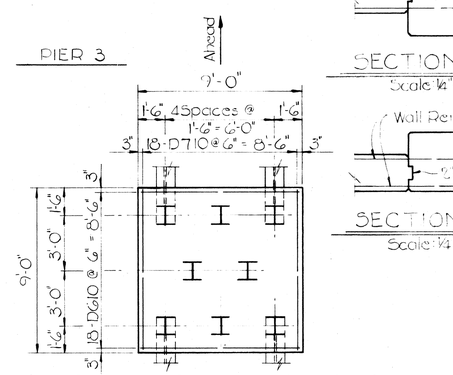

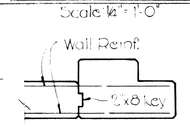

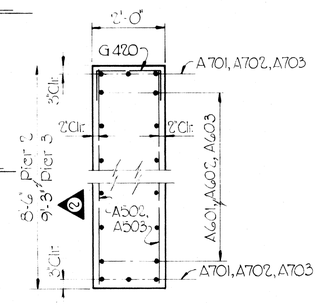

ESTIMATED QUANTITIES	Concrete Class 'A' C.Y.	Reinforcing Steel Lbs.
Pier 2	232.8	51,590
Pier 3	230.8	36,360

STATE OF TENNESSEE
DEPARTMENT OF HIGHWAYS
NASHVILLE

STRUCTURE NO. 21 AT STA. 475+10 ℄ I-40
I-40 OVER HERMAN ST. & ILL. CENTRAL RR.
DAVIDSON COUNTY
PIERS 2 & 3

KNOERLE, BENDER, STONE & ASSOCIATES, INC.
NASHVILLE, TENN. BALTIMORE, MD.

CORRECT _____ BRIDGE ENGINEER
APPROVED _____ STATE HIGHWAY ENGINEER

K-80-10

DESIGNED BY	P.L.T.	DATE	MARCH, 69
DRAWN BY	N.M.S.	DATE	APRIL, 69
TRACED BY	N.M.S.	DATE	APRIL, 69
CHECKED BY		DATE	

MICROFILMED

7-23-69 J.S.P. Framing Plan
Top Web Elev. @ Piers

FED. ROAD DIST. NO.	STATE	FED. AID PROJ. NO.	FISCAL YEAR	SHEET NO.	TOTAL SHEETS
3	TENN.	I-40-4(20)208	1968	101	360

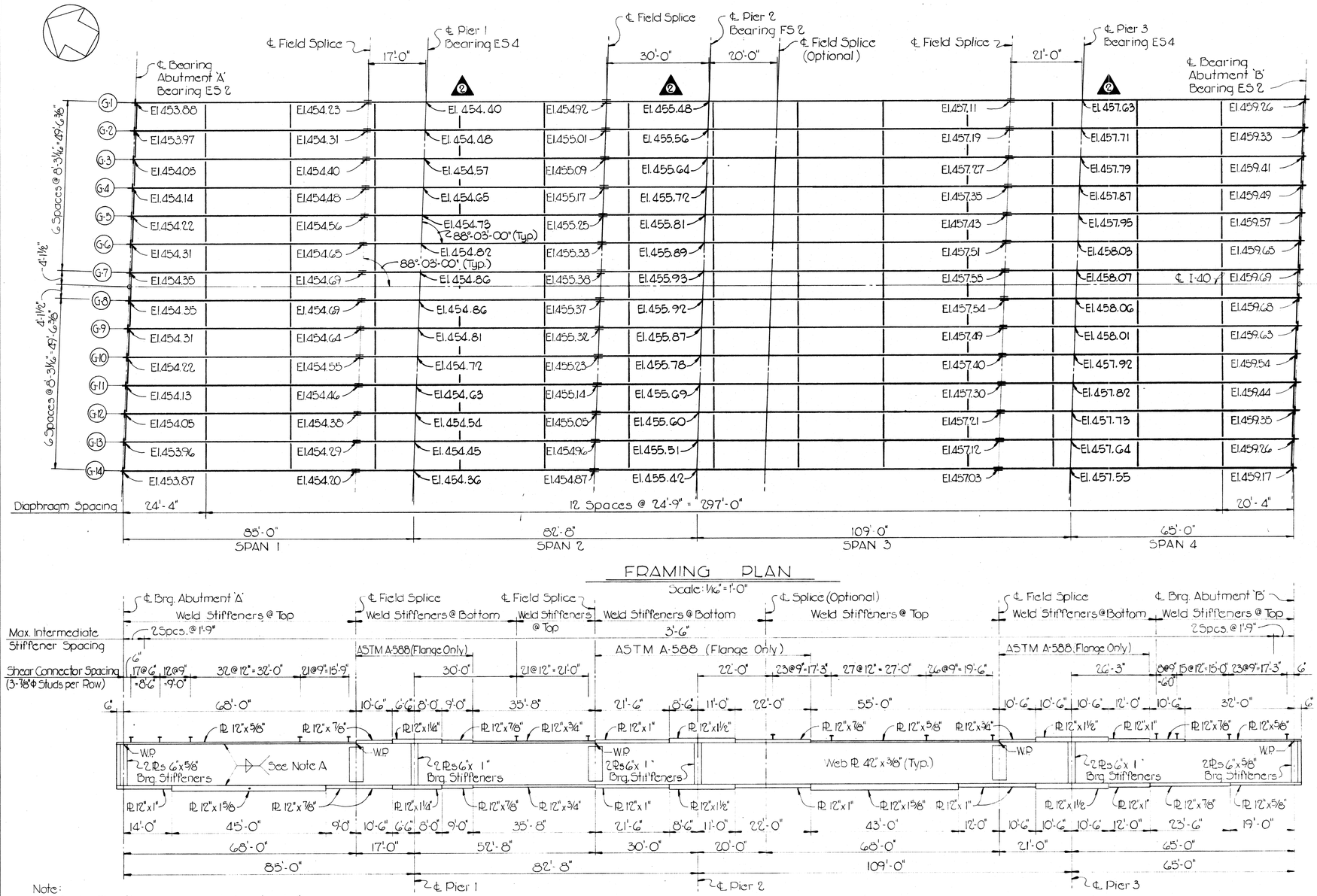

FRAMING PLAN

Scale: 1/16" = 1'-0"

GIRDER ELEVATION

Not to Scale

Note:
Girder Elevations shown are to top of web PL (bottom of top flange). Girders are set on straight grades (chords) between elevation points (W.P.) indicated on Girder Elevation. See Typ. Section Dwg. K-80-12 for dimensions from top of slab to top of web PL @ Abuts. & Piers.

Note A:
Fillet weld sizes shall be in accordance with Article 1.7.27 of the A.A.S.H.O. Specifications (1965).

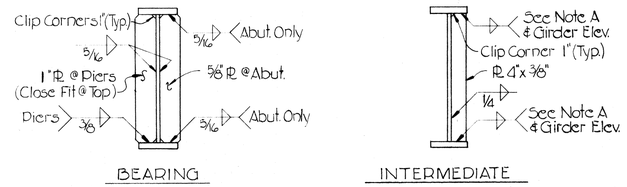

BEARING INTERMEDIATE

Note:
Intermediate stiffeners to be welded to one side of web. Use intermediate stiffeners on inside face of exterior girders. Stiffeners at all interior bearings to be welded to bottom flange and a close fit at top flange. At both end bearings, weld stiffeners to top and bottom flanges.
Girder end cuts, Intermediate Stiffeners, Diaphragm Connection Plates and Bearing Stiffeners are to be set vertical under full dead load.

STIFFENER DETAILS

Not to Scale

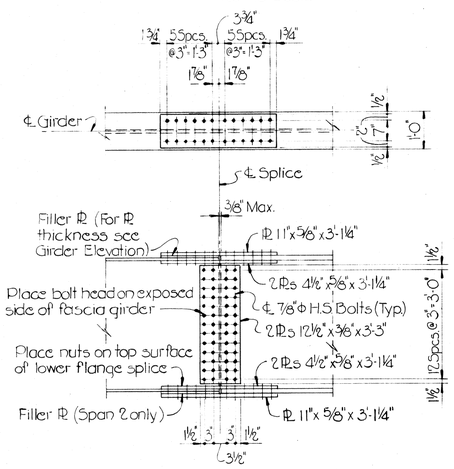

Notes:
For Field Assembly and Erection Notes, see Dwg. K-80-1.
The Contractor has the option of using either the bolted field splice or the welded field splice as detailed on Dwg. K-80-2.

BOLTED GIRDER SPLICE DETAIL

Scale: 1/2" = 1'-0"

Notes:
1. For General Notes see Dwg. K-80-5.
2. For Shoe Details, see Tennessee Std. Dwg. K-38-155.
3. For Shear Connector and Welding Details see Dwg. K-80-2.
4. For Diaphragm Connection Details see Dwg. K-80-12.
5. For Expansion Device Details, see Tennessee Std. Dwg. K-56-34.

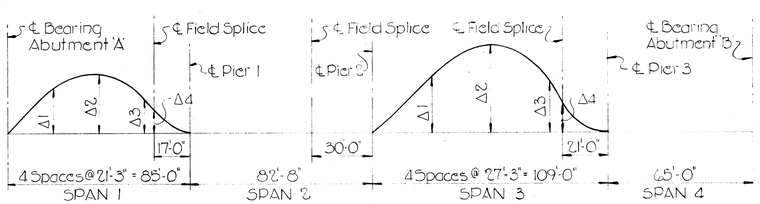

CAMBER DIAGRAM

Not to Scale

DEFLECTIONS AND CAMBER

	SPAN 1				SPAN 3			
	Δ1	Δ2	Δ3	Δ4	Δ1	Δ2	Δ3	Δ4
Deflection Due to Weight of Steel	3/16"	1/4"	1/8"	1/8"	1/2"	7/16"	1/4"	3/16"
Deflection Due to Remaing Dead Load	1 1/16"	1 9/16"	3/4"	9/16"	1 1/4"	1 13/16"	1 3/16"	7/8"
Camber	1 1/4"	1 9/16"	7/8"	1 1/16"	1 1/2"	2 3/16"	1 7/16"	1 1/16"

ESTIMATED QUANTITIES

Structural Steel-Lbs.
812,000

STATE OF TENNESSEE
DEPARTMENT OF HIGHWAYS
NASHVILLE

STRUCTURE NO. 21 AT STA. 475 + 10 ℄ I-40
I-40 OVER HERMAN ST. & ILL. CENTRAL RR.
DAVIDSON COUNTY
FRAMING PLAN

KNOERLE, BENDER, STONE & ASSOCIATES, INC.
NASHVILLE, TENN. BALTIMORE, MD.

CORRECT _____ BRIDGE ENGINEER
APPROVED _____ STATE HIGHWAY ENGINEER

K-80-11

DESIGNED BY	P.L.T.	DATE	MARCH, 69
DRAWN BY	N.M.S.	DATE	MARCH, 69
TRACED BY	N.M.S.	DATE	MARCH, 69
CHECKED BY	D.S.	DATE	MARCH, 69

MICROFILMED

FED. ROAD DIST. NO.	STATE	FED. AID PROJ. NO.	FISCAL YEAR	SHEET NO.	TOTAL SHEETS
3	TENN.	I-40-4(20)208	1968	102	360

7-23-69 J.S.P. Est. Quantities

7-30-71 CFC Typical Cross Section

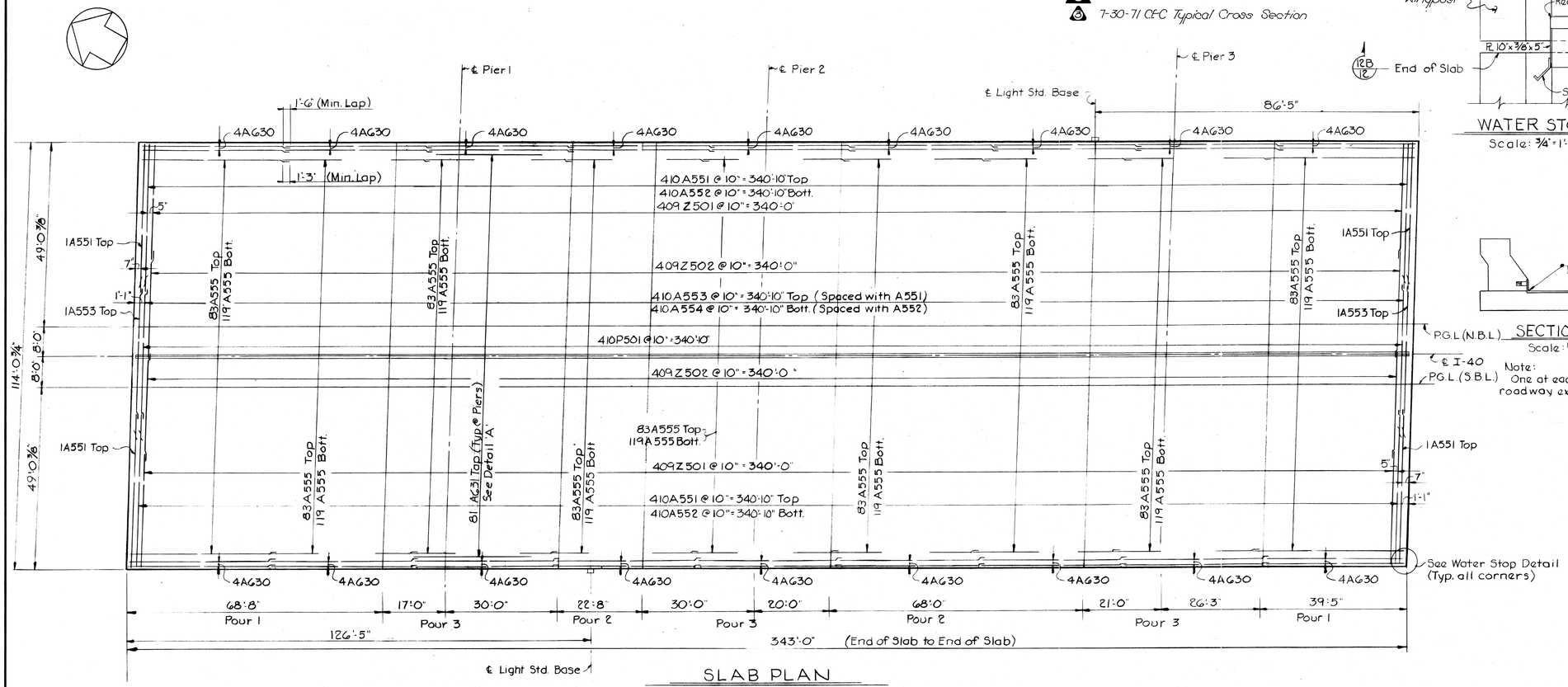

SLAB PLAN

Scale: 1/16" = 1'-0"

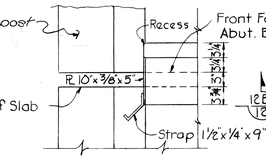

WATER STOP

Scale: 3/4" = 1'-0"

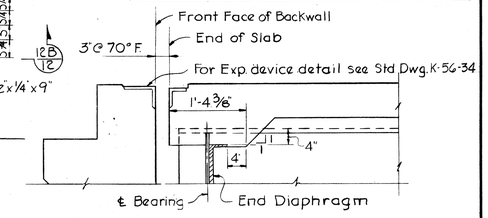

SECTION 12A

Scale: 3/4" = 1'-0"

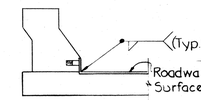

SECTION 12 B

Scale: 1/2" = 1'-0"

Note: One at each end of roadway exp. device.

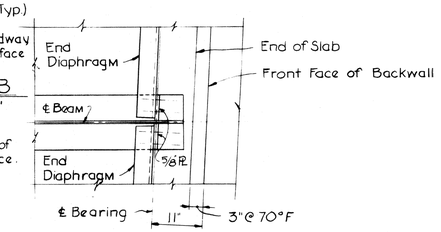

PLAN-END DIAPHRAGM

Scale: 3/4" = 1'-0"

NOTES

1. The Concrete Deck shall not be poured until all structural steel is erected and all bolting complete. No portion of the parapet and median shall be poured until the entire Deck Slab is in place.
2. When pouring Slab, provisions shall be made for setting reinforcing steel for concrete parapet and concrete median. See Std. Dwg. K-38-154A for parapet details.
3. For details of Light Std. and Conduits see Dwgs. K-80-8
4. Field Connections shall be 7/8" ϕ high tensile strength bolts A.S.T.M.-A325 unless otherwise shown. See AASHO Specifications Art. 2-10-20
5. All pours are to be made in numerical sequence. Pours with the same number designation may be made simultaneously.

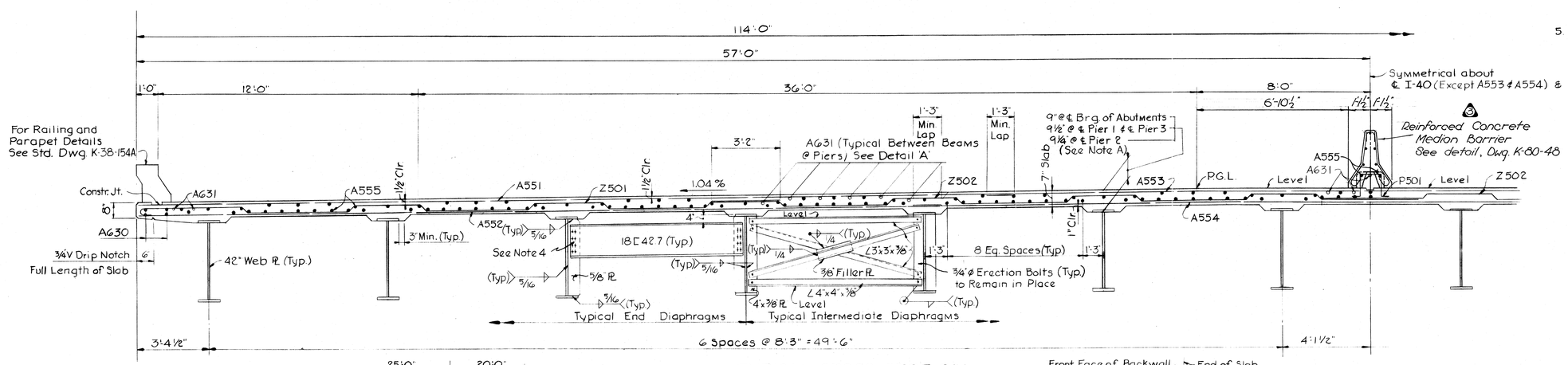

TYPICAL CROSS SECTION

Scale: 3/8" = 1'-0"

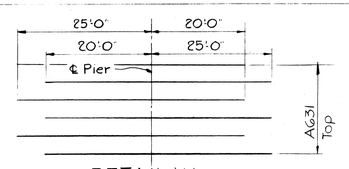

DETAIL 'A'

Not to Scale

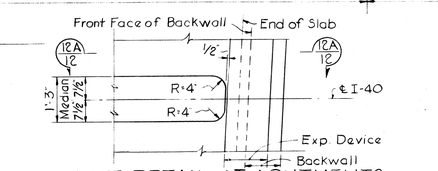

JOINT DETAIL AT ABUTMENTS

Scale: 1/2" = 1'-0"

Note A: Dimensions are from top of slab to top of web.

Scale: As Noted

ESTIMATED QUANTITIES	
Concrete Class A C.Y.	Reinforcing Steel Lbs.
909.8	251,530

STATE OF TENNESSEE
DEPARTMENT OF HIGHWAYS
NASHVILLE

STRUCTURE NO. 21 AT STA. 475+10 ℄ I-40
I-40 OVER HERMAN ST. & ILL. CENTRAL R.R.
DAVIDSON COUNTY
SLAB PLAN

KNOERLE, BENDER, STONE & ASSOCIATES, INC.
NASHVILLE, TENN. BALTIMORE, MD.

DESIGNED BY P.L.T. DATE 3-11-69
DRAWN BY A.G.S. DATE 3-19-69
TRACED BY DATE
CHECKED BY DATE

CORRECT _____ BRIDGE ENGINEER
APPROVED _____ STATE HIGHWAY ENGINEER

K-80-12

MICROFILMED

FED. ROAD DIST. NO.	STATE	FED. AID PROJ. NO.	FISCAL YEAR	SHEET NO.	TOTAL SHEETS
3	TENN.	I-40-4(20)208	1968	103	360

SLAB

MARK	BAR	NUMBER	SIZE	LENGTH	BENDING DIMENSIONS a	b	c	d	e	f	LOCATION
A551	A	824	5	41'-0"							Slab
A552	A	820	5	36'-10"							"
A553	A	412	5	34'-3"							"
A554	A	410	5	42'-6"							"
A555	A	1818	5	39'-3"							Slab & Median
P501	P	410	5	3'-11"	11"	1'-0"	6"				Median
Z501	Z	818	5	30'-11"	29'-6"	4'-9"	4½"	4'-4"	3'-2"	6¼"	Slab
Z502	Z	818	5	33'-8"	32'-7½"	3'-2"	4½"	4'-4"	3'-2"	6¼"	"
AG30	A	72	6	39'-6"							Slab
AG31	A	243	6	45'-0"							"
REINFORCED CONCRETE MEDIAN BARRIER											
A401	A	45	4	39'-0"							Median Barrier
X401	X	206	4	2'-2"	8½"	11"	8½"	3½"	7"		"
Y401	Y	410	4	2'-8"	1'-0"	1'-1"					Median Barrier

ABUTMENTS

MARK	BAR	NUMBER Abut. A	NUMBER Abut. B	SIZE	LENGTH	BENDING DIMENSIONS a	b	c	d	e	f	LOCATION
A401	A	12	12	4	3'-9"							Wingpost
A402	A	4	4	4	3'-8"							"
A403	A	4	4	4	3'-5"							"
A404	A	4	4	4	3'-2"							"
A405	A	2	2	4	2'-10"							"
A406	A	12	12	4	5'-6"							"
H401	H	14	14	4	3'-2"	0"	9"	1'-2"	1'-3"	1'-1"	9"	Wingpost
H402	H	114	114	4	5'-0"	6"	1'-8"	6"	2'-4"	1'-7¾"	1'-7¾"	Appr. Slab Brk.
A501	A	10	10	5	26'-6"							Footing
A502	A	5	5	5	36'-7"							"
A503	A	5	5	5	29'-6"							"
A504	A	10	10	5	8'-0"							"
A505	A	256	256	5	4'-11"							Backwall
A506	A	264	264	5	3'-0"							Bkwl. & Wingwl.
A507	A	18	18	5	22'-3"							Backwall
A508	A	9	9	5	31'-5"							"
A509	A	9	9	5	34'-11"							"
A510	A	8	8	5	4'-3"							Wingwall
A511	A	8	—	5	3'-11" & 4'-6" (4 Ea. Lgth.)							"
A512	A	4	—	5	4'-6"							"
A513	A	8	8	5	11'-6"							"
A514	A	4	—	5	11'-4							"
A515	A	4	4	5	4'-3							"
A516	A	—	8	5	4'-2" & 4'-10" (4 Ea. Lgth.)							"
A517	A	—	4	5	10'-11"							"
A518	A	—	4	5	9'-3							"
C501	C	18	18	5	2'-9"	2'-0"	9"					Wingwall
N501	N	164	116	5	10'-5"	2'-7"	2'-0"	1'-3"				Abut. Seat
N502	N	12	12	5	9'-3"	2'-0"	2'-0"	1'-3"				Footing
A701	A	8	8	7	25'-0"							Footing
A702	A	8	8	7	26'-8"							"
A703	A	8	8	7	37'-1"							"
A704	A	4	4	7	33'-7"							"
A705	A	4	4	7	30'-0"							"
A706	A	12	12	7	8'-0"							"
C502	C	4	4	5	10'-1"	9"	6"	8"				Wingwalls
C503	C	4	4	5	3'-3"	2'-8"	8"					"
C504	C	4	—	5	3'-11"	3'-4"	8"					"
C505	C	—	4	5	4'-0"	3'-5"	8"					"

PIERS

MARK	BAR	NUMBER Pier 1	NUMBER Pier 2	NUMBER Pier 3	SIZE	LENGTH	BENDING DIMENSIONS a	b	c	d	e	f	LOCATION
A501	A	12	12	12	5	38'-0"							Cap
A502	A	—	180	—	5	8'-2"							Crash Wall
A503	A	—	—	180	5	8'-11"							"
A504	A	—	—	60	5	3'-0"							"
A601	A	—	28	32	6	9'-4"							Crash Wall
A602	A	—	56	64	6	15'-10"							"
A603	A	—	42	48	6	12'-0"							"
A701	A	8	26	26	7	12'-0"							Cap & Crash Wall
A702	A	—	12	12	7	9'-4"							Crash Wall
A703	A	—	24	24	7	16'-6"							"
A801	A	8	8	8	8	12'-0"							Cap
A901	A	100	—	—	9	17'-11"							Columns
A902	A	—	—	100	9	28'-3"							"
A1001	A	16	16	16	10	26'-7"							Cap
A1002	A	12	12	12	10	16'-0"							"
A1101	A	12	12	12	11	26'-10"							Cap
A1102	A	14	14	14	11	15'-0"							"
A1103	A	7	7	7	11	17'-0"							"
A1104	A	—	120	—	11	36'-2"							Columns
B701	B	8	8	8	7	14'-7"	13'-9"						Cap
B1101	B	8	8	8	11	22'-9"	21'-2"						Cap
B1102	B	6	6	6	11	15'-4"	13'-9"						"
C910	C	100	—	—	9	6'-6"	5'-6"	1'-0"					Footings
C911	C	—	—	100	9	6'-9"	5'-9"	1'-0"					"
C1101	C	—	120	—	11	7'-10"	6'-10"	1'-0"					Footings
D510	D	160	—	—	5	8'-8"	7'-6"						Footings
D610	D	—	180	90	6	9'-10"	8'-6"						Footings
D710	D	—	—	90	7	10'-2"	8'-6"						Footings
G420	G	—	90	90	4	3'-8"	1'-0"	1'-8"					Crash Wall
L501	L	8	8	8	5	7'-2"	6'-3"	2'-11"	2'-10⅛"	5½"			Cap
N410	N	75	165	130	4	12'-8"	2'-11"	2'-11"	1'-0"				Columns
N510	N	60	60	60	5	11'-4" to 13'-8" (2 Ea., V.B. 2")	2'-1"	5'-1" to 4'-3"	1'-0"				Cap
N511	N	296	296	296	5	13'-6"	2'-1"	4'-2"	1'-0"				"

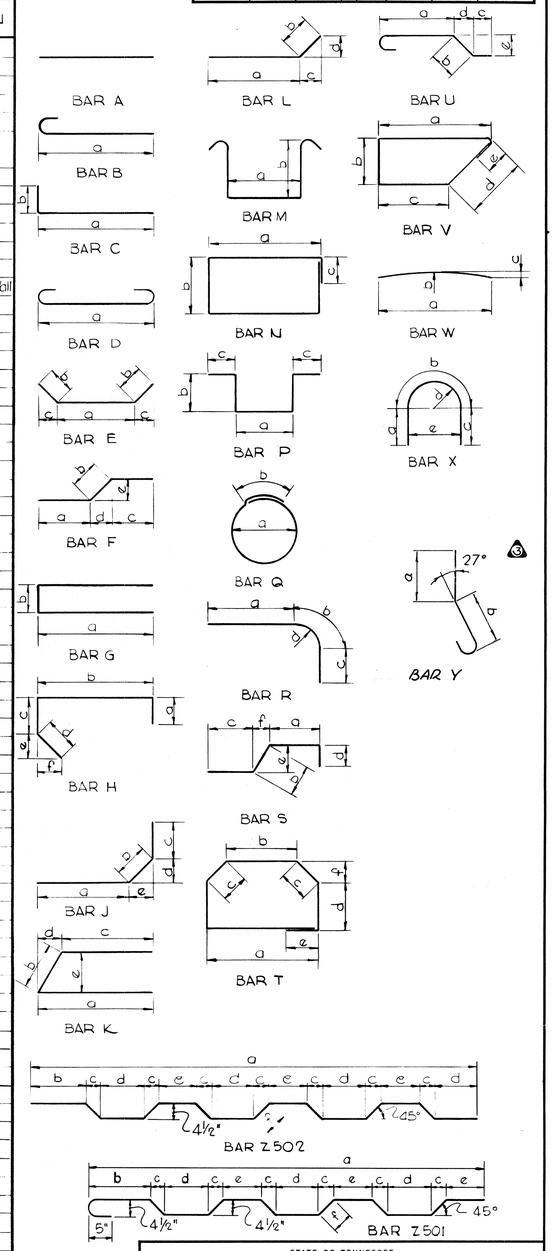

STATE OF TENNESSEE
DEPARTMENT OF HIGHWAYS
NASHVILLE

STRUCTURE NO. 21 AT STA. 475+10 ℄ I-40
I-40 OVER HERMAN ST. & ILL. CENTRAL RR
DAVIDSON COUNTY
REINFORCING STEEL SCHEDULE

KNOERLE, BENDER, STONE & ASSOCIATES, INC.
NASHVILLE, TENN. BALTIMORE, MD.

CORRECT _____ BRIDGE ENGINEER
APPROVED _____ STATE HIGHWAY ENGINEER

K-30-13

DESIGNED BY _____ DATE _____
DRAWN BY F.R.O. & N.M.S. DATE APRIL, 69
TRACED BY _____ DATE _____
CHECKED BY _____ DATE _____

1 6-2-69 DWF
2 7-23-69 J.S.P.
3 7-30-70 CFC

NOTES:
1. Reinforcing steel detailed as per Manual of Standard Practice for Reinforced Concrete Structures A.C.I.

PLOT TIME 8:30 PM

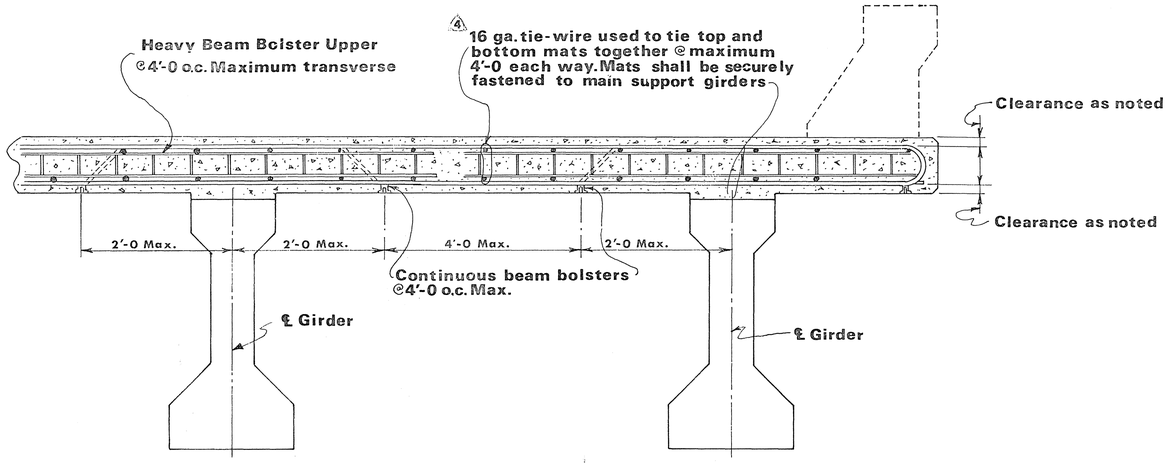

TYPICAL DETAILS FOR GIRDER TYPE BRIDGES

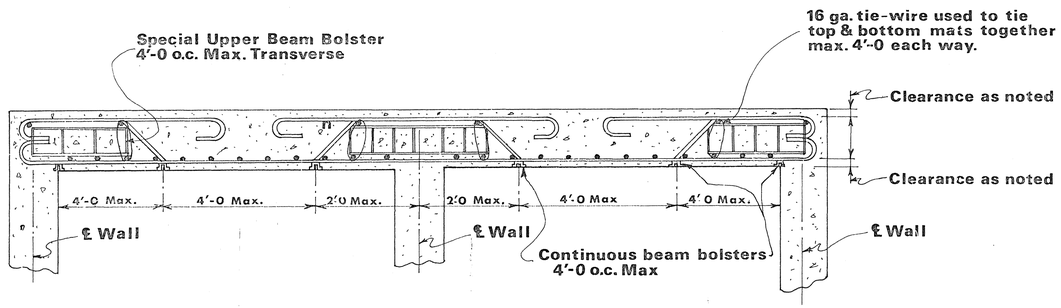

TYPICAL DETAILS FOR BOX TYPE STRUCTURES

△4 TABLE A

Ba Size	Approx dia. outside deformations (inches)
#3	7/16
#4	9/16
#5	11/16
#6	7/8
#7	1

△5 TABLE B

Bar Size	Approx dia. outside deformations (inches)
8	$1\frac{1}{8}$
9	$1\frac{1}{4}$
10	$1\frac{7}{16}$
11	$1\frac{5}{8}$
14	$1\frac{7}{8}$
13	$2\frac{1}{2}$

PROJECT NO.	YEAR	SHEET NO.

REVISIONS

NO.	DATE	BY	BRIEF DESCRIPTION
1	10-13-59		Reinf bar clearance
2	6-16-70		Gen. Revisions
3	9-12-74		Note 3 Changed
4	1 14-75		Revised Note
5	8-27-76		Revised Note #10 & added TABLE A & B, added note 13.

1. Reinforcement in Bridge slabs and top slabs of boxes shall be securely spaced from the forms by metal spacers as indicated this sheet. Other type spacers will not be permitted.

2. All beam bolsters (BB) & heavy beam bolster upper (HBBU) and Special Upper Beam bolster shall be made according to C.R.S.I. Specifications.

*3. Beam bolster (BB) legs in contact with forms and to be at exposed surface of concrete, shall be either "plastic protected" or "stainless steel protected"

4. Reinforcing bars shall be securely fastened together at each intersection using a minimum 16 ga. tie wire, except where spacing is less than one foot in each direction, alternate intersections shall be fastened.

5. Reinforcing bar supports shall be furnished to minus $\frac{1}{16}$" or plus $\frac{1}{8}$" of specified bar.

6. The top and bottom reinforcing mats shall be tied together at maximum of 4'-0 o.c. each way.

7. When any type shear connector protrudes from the top flange of the beam, the reinforcing steel shall be tied to these connectors at maximum 2'-0 o.c. along the beam.

8. Reinforcing steel shall not be used to support concrete buggies, material carts, or bundles of re-bars.

9. Cost of all bar supports and tie wire shall be included in bid price for reinforcing steel.

△4 10. A reinforcing bar may be substituted when a heavy Beam Bolster Upper of a 1" or less height is required. See Table A above.

11. A special Upper Beam Bolster (as detailed this sheet) may be substituted for heavy Beam Bolster Uppers required in heights of $5\frac{1}{4}$" or greater.

12. Steel in top & bottom of slabs of Reinforced Concrete Hollow Box Girders will be supported in accordance with this drawing.

*3a. Plastic protected legs shall be dipped and baked onto the upturned legs per the latest C.R.S.I. specifications.

*3b. Stainless protected legs shall be made from stainless steel with a minimum chromium content of 16% (similar to AISI TYPE 430). Per the latest C.R.S.I. specifications.

△5 13. Use table A and/or B for bar sizes to determine beam bolster size to use.

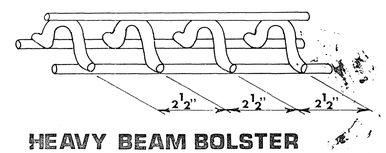

HEAVY BEAM BOLSTER UPPER (HBBU)

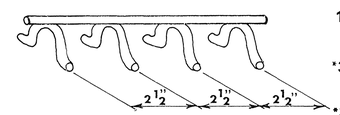

BEAM BOLSTER (B B)

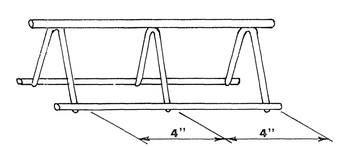

SPECIAL UPPER BEAM BOLSTER

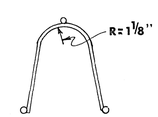

END VIEW

STATE OF TENNESSEE
DEPARTMENT OF TRANSPORTATION
BUREAU OF HIGHWAYS

STANDARD REINFORCING BAR SUPPORT DETAILS FOR CONCRETE SLABS

CORRECT H. W. Lenrick
ENGINEER OF STRUCTURES

APPROVED Lewis Evans
DIRECTOR OF HIGHWAYS

K-80-14

DESIGNED BY _____ DATE _____
DRAWN BY G.P. Mullican DATE 8-29-73
SUPERVISED BY _____ DATE _____
CHECKED BY _____ DATE _____

· NOTES ·

1. PORTIONS OF THE CONCRETE DECK FOR BRIDGES AND CULVERTS MAY BE CONSTRUCTED OF PRECAST PRESTRESSED BRIDGE DECK PANELS PROVIDED THEY ARE FABRICATED AND USED IN ACCORDANCE WITH THIS DRAWING.
2. THE PANELS DETAILED ON THIS SHEET ARE FOR USE ON BRIDGE DECKS WITH GIRDER SPACINGS WITHIN THE RANGE SHOWN. PANELS FOR OTHER GIRDER SPACINGS AND FOR TOP SLABS OF BOX AND SLAB CULVERTS MAY BE DESIGNED AND DETAILED BY THE CONTRACTOR AND SUBMITTED TO THE ENGINEER OF STRUCTURES FOR APPROVAL. EACH SUBMITTAL OF SHOP DRAWINGS FOR PANELS THAT DIFFER FROM THE DESIGN SHOWN ON THIS SHEET SHALL BE ACCOMPANIED BY A SET OF DESIGN CALCULATIONS.
3. PANELS SHALL BE DESIGNED TO SUPPORT THE DEAD LOAD OF PANEL, REINFORCEMENT, PLASTIC CONCRETE, AND A 50 LBS. PER SQUARE FOOT CONSTRUCTION LOAD. THE PANEL AND SLAB SHALL BE DESIGNED TO SUPPORT THE DEAD LOAD OF THE PANEL, REINFORCEMENT, AND PLASTIC CONCRETE ACTING ON THE NON-COMPOSITE SECTION PLUS THE DESIGN LIVE LOADS AND DEAD LOADS ACTING ON THE COMPOSITE SECTION.
4. THE DESIGN SPAN OF THE PRECAST PANEL SHALL BE THE CLEAR SPAN PLUS TWO (2) INCHES, MEASURED PARALLEL TO THE PANEL EDGES.
5. REINFORCEMENT AND STRANDS IN THE PANEL SHALL HAVE A MINIMUM OF ONE (1) INCH CONCRETE COVER ON THE BOTTOM SIDE OF THE PANEL. REINFORCEMENT IN THE CAST IN PLACE CONCRETE SHALL HAVE ONE-HALF (1/2) INCH MINIMUM COVER BETWEEN THE PANEL AND SLAB REINFORCEMENT.
6. IF PANELS ARE USED THE BOTTOM MATS OF TRANSVERSE AND LONGITUDINAL SLAB REINFORCEMENT MAY BE OMITTED BETWEEN EXTERIOR BEAMS. BARS F5-- AND ANY OTHER SUPPLEMENTAL BARS REQUIRED TO BE PLACED IN CAST-IN-PLACE PORTIONS OF THE SLAB SHALL BE ASTM A615, GRADE 60.
7. PRECAST CONCRETE PANELS SHALL NOT BE CONSIDERED AS LATERAL BRACING FOR FLANGES OF SUPPORTING STRUCTURAL MEMBERS.
8. ANY APPRECIABLE INCREASE IN TOTAL SLAB THICKNESS MAY REQUIRE AN INCREASE IN THE SIZE OF MAIN STRUCTURAL MEMBERS. ANY SUCH INCREASE WILL BE AT THE CONTRACTOR'S EXPENSE.
9. SHOP DRAWINGS AND PROPOSED CONSTRUCTION DETAILS SHALL BE SUBMITTED TO THE ENGINEER OF STRUCTURES FOR APPROVAL.
10. PANELS MUST BE ATTACHED TO OR SUPPORTED BY MAIN SUPPORTING MEMBERS BY MEANS OTHER THAN WELDING AND SHALL BEAR UNIFORMLY ON A ONE (1) INCH WIDE STRIP OF FIBER BOARD OR A 2" WIDE CONCRETE GROUT BED SUPPORTED DIRECTLY BY MAIN STRUCTURAL MEMBERS. THE THICKNESS OF FIBER BOARD AND DEPTH OF GROUT BED MUST BE ADJUSTED AS DIRECTED BY THE ENGINEER TO PRODUCE THE PROPER DECK PROFILE. A MINIMUM THICKNESS OF ONE-HALF (1/2) INCH WILL BE REQUIRED TO PROVIDE UNIFORM BEARING. THE THICKNESS (OR HEIGHT) OF THE FIBERBOARD PADS SHALL NOT EXCEED THEIR WIDTH.
11. THE TOP OF PANELS SHALL HAVE A ROUGHENED SURFACE WITH APPROXIMATELY ONE-QUARTER (1/4) INCH DEEP DEPRESSIONS. CARE SHALL BE TAKEN SO AS NOT TO DISPLACE THE COARSE AGGREGATES WHEN PREPARING THE ROUGHENED SURFACE.
12. ALL INTERIOR DIAPHRAGMS MAY BE CONSTRUCTED THREE (3) INCHES CLEAR OF THE BOTTOM OF THE PANELS TO ALLOW CONTINUOUS PLACEMENT OF PANELS.
13. CONCRETE SHALL BE PLACED IN ACCORDANCE WITH THE CONTRACT SPECIFICATIONS. PARTICULAR EMPHASIS SHOULD BE GIVEN TO PROPER VIBRATION OF THE CONCRETE TO AVOID HONEYCOMBS AND VOIDS, ESPECIALLY AT CONSTRUCTION JOINTS, EXPANSION JOINTS, AND ENDS OF PANELS. ALL PANEL JOINTS MUST BE MORTAR TIGHT. IMMEDIATELY PRIOR TO PLACING THE CAST-IN-PLACE PORTION OF THE DECK SLAB, THE PRECAST DECK SLABS SHALL BE WETTED UNTIL FREE MOISTURE APPEARS AND REMAINS.
14. THE FIBERBOARD STRIP SHALL BE HELD IN PLACE BY EITHER GLUE OR EPOXY.
15. PAYMENT WILL BE BASED ON PLANS DIMENSIONS AND DETAILS FOR THE REGULAR REINFORCED CONCRETE SLAB. NO ADDITIONAL COMPENSATION SHALL BE MADE SHOULD PROBLEMS ARISE DUE TO CAMBER OR VERTICAL CURVE ADJUSTMENTS IN CONJUNCTION WITH THE USE OF PANELS.
16. MATING SURFACES OF THE PRECAST PANELS SHALL NOT DEVIATE FROM A STRAIGHT LINE BY MORE THAN 1/8 INCH IN TEN (10) FEET. ALL OTHER DIMENSIONS SHALL BE FABRICATED TO + 1/4, - 1/8 INCH EXCEPT STRANDS SHALL BE LOCATED TO ± 1/16 INCH VERTICALLY.
17. THE SIZE AND ADEQUACY OF THE LIFTING STRAPS SHALL BE THE RESPONSIBILITY OF THE CONTRACTOR.
18. CONTRACTOR MAY SUBSTITUTE 6X6 - D6 X D6 WELDED WIRE FABRIC, ASTM A497, FOR NO. 3 BARS.
19. PANELS SHALL BE SUPPORTED SO AS TO PRESENT A UNIFORM BOTTOM SURFACE.

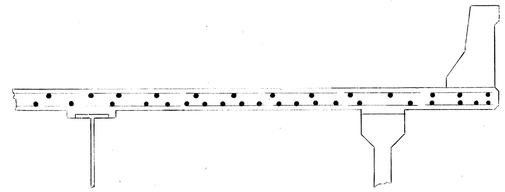

· SUPERSTRUCTURE SECTION ·
(SHOWING TYPICAL REINFORCING. SEE CONTRACT DRAWINGS FOR REINFORCING SIZE AND SPACING AND SLAB DIMENSIONS.)

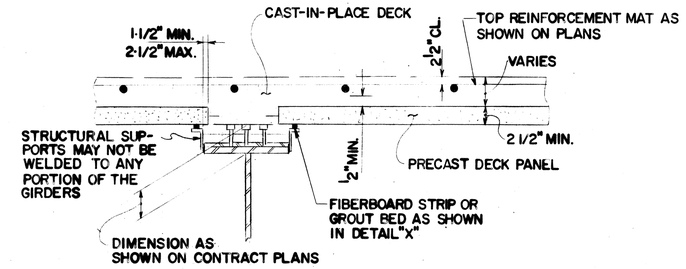

· DETAIL Y ·
SUGGESTED SUPPORT SYSTEM FOR STEEL GIRDERS WHENEVER TOP FLANGE VARIES.

PROJECT NO.	YEAR	SHEET NO.

REVISIONS

NO.	DATE	BY	BRIEF DESCRIPTION

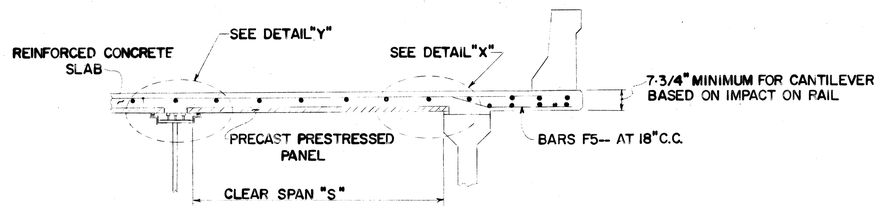

· SUPERSTRUCTURE SECTION ·
(SHOWING PRECAST DECK PANEL)

· GENERAL NOTES ·

SPECIFICATIONS: STANDARD ROAD AND BRIDGE SPECIFICATIONS OF THE TENNESSEE DEPARTMENT OF HIGHWAYS (1968 EDITION).

DESIGN SPECIFICATIONS: AASHTO 1977 EDITION WITH ADDENDA.

CONCRETE: SHALL HAVE A MINIMUM 28 DAY COMPRESSIVE STRENGTH OF 5,000 PSI AND A MINIMUM RELEASE STRENGTH OF 4,000 PSI.

REINFORCING STEEL: FOR PANELS, TO BE ASTM A615 GRADE 40 OR GRADE 60. SEE NOTE 6.

PRESTRESSING STRANDS: TO BE 3/8" ø 270K, HIGH STRENGTH, 7 WIRE UNCOATED STRESS RELIEVED PRESTRESSING STRANDS WITH AN INITAL TENSION OF 16,100 LBS. PER STRAND UNLESS OTHERWISE APPROVED BY THE ENGINEER OF STRUCTURES. SEE NOTE 2.

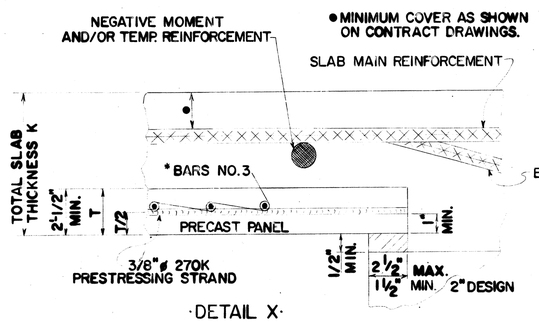

· DETAIL X ·

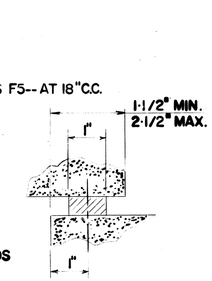

· FIBERBOARD ALTERNATE ·

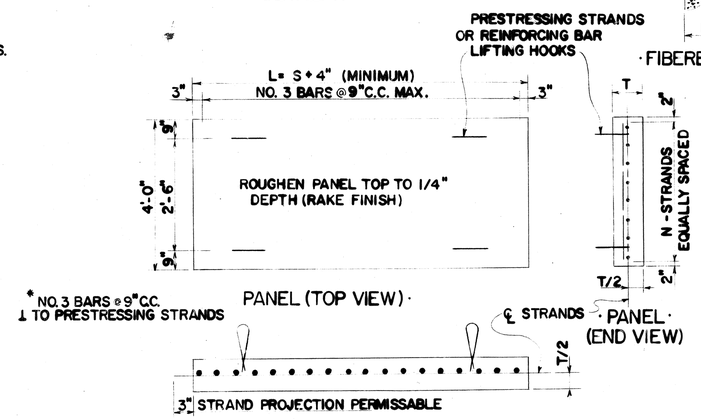

· PANEL (ELEVATION) ·

· TABLE OF VARIABLE DIMENSIONS ·

S MAX. FT.	(1) TOTAL SLAB THICKNESS K (IN.)	PANEL THICKNESS T (IN.)	N, NUMBER OF 3/8" ø 270K STRANDS (MIN.)
4.5	8.0	2-1/2	4
5.0	8.0	2-1/2	5
5.5	8.0	2-1/2	6
6.0	8.0	2-1/2	7
6.5	8.0	2-1/2	8
7.0	8.0	2-1/2	9
7.5	8.0	2-1/2	10
7.5	8.5	3	9
8.0	8.5	3	11
8.5	8.5	3	12
8.5	8.75	3	12
9.0	8.75	3	13
9.5	8.75	3	14
9.5	9.0	3-1/2	13
10.0	9.0	3-1/2	14
10.5	9.0	3-1/2	16
10.5	9.5	4	15
11.0	9.5	4	16
11.5	9.5	4	17

(1) BASED ON 5 1/2" THICKNESS OF CAST IN PLACE CONCRETE.

· TABLE OF BAR DIAMETERS FOR CLEARANCES ·

BAR SIZE	APPROX. DIA. OUTSIDE DEFOR. (IN.)
3	7/16
4	9/16
5	11/16
6	7/8
7	1
8	1 1/8
9	1 1/4
10	1 7/16
11	1 5/8
14	1 7/8
18	2 1/2

STATE OF TENNESSEE
DEPARTMENT OF TRANSPORTATION
BUREAU OF HIGHWAYS
TENNESSEE STANDARD
PRECAST PRESTRESSED BRIDGE DECK PANELS
1979

CORRECT: Edwin L. Lovett
ENGINEER OF STRUCTURES

APPROVED: Lewis Evans
DIRECTOR OF HIGHWAYS

K-80-15A

DESIGNED BY _____ DATE _____
DRAWN BY D. Briley DATE 8/79
SUPERVISED BY _____ DATE _____
CHECKED BY _____ DATE _____

FED ROAD DIST NO	STATE	FED AID PROJ NO	FISCAL YEAR	SHEET NO	TOTAL SHEETS
3	TENN	I-40-4(20)208	1968	104	360

REVISION

1. 6-2-69 DWF Quantity Notes & Vert Cir
2. 10-2-69 ERG Concrete Quantity - Pier 3
3. 11-15-74 RMD Revised Superstructure Reinf Steel Qt.
5. 3-2-70 DPH Insert note
4. 8-2-71 CEC Revised Quantity Block for Reinf. Conc. Med. Barrier

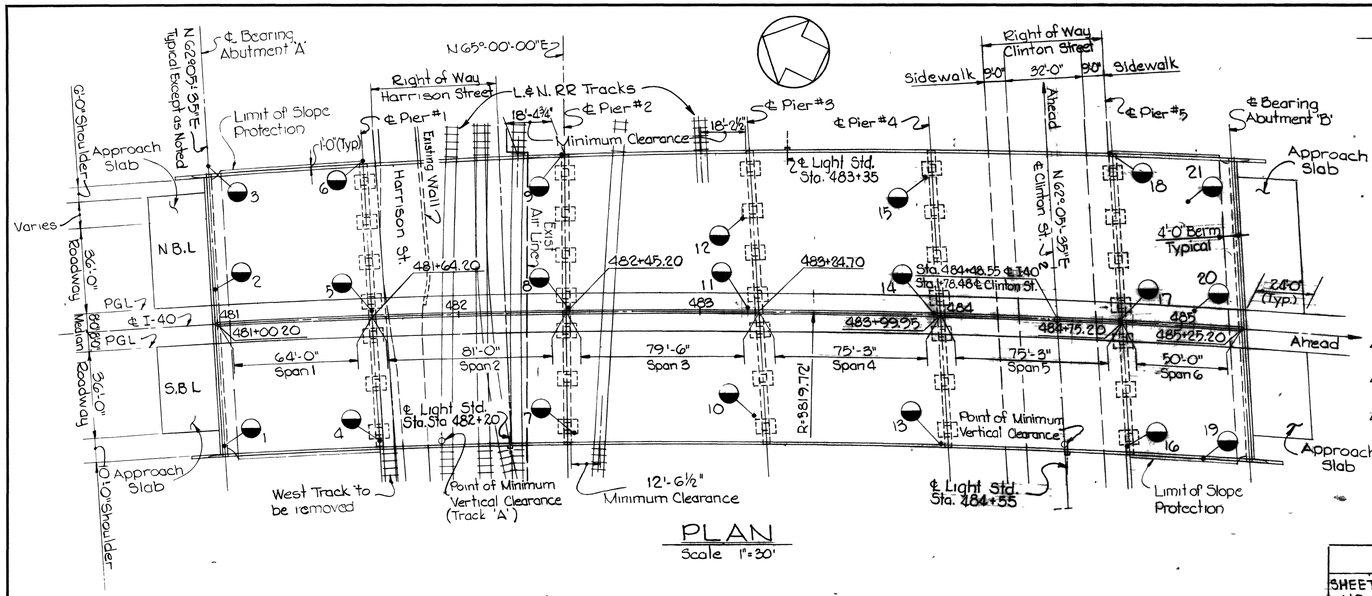

PLAN

Scale 1" = 30'

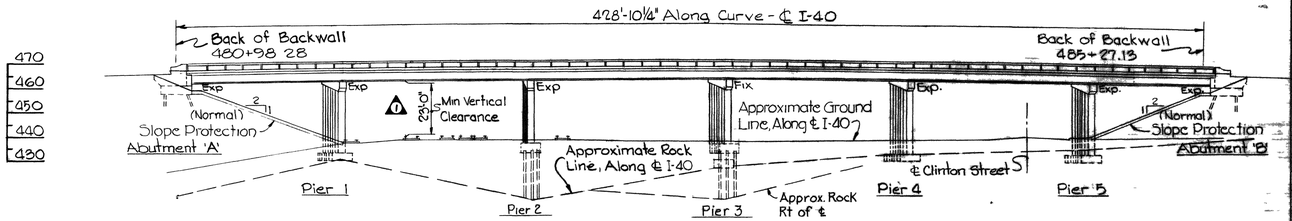

ELEVATION

Scale: 1" = 30'-0"

HORIZONTAL CURVE DATA I-40

D = 1°-30'-00" T = 310.68'
R = 3819.72' L = 620.00'
Δ = 9°-18'-00" E = 12.67'

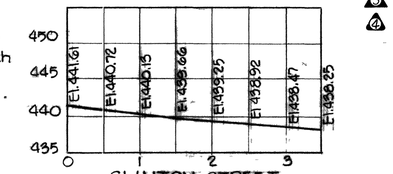

CLINTON STREET

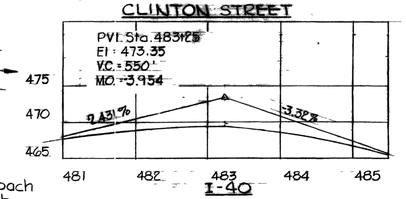

PROFILE GRADE LINES

Scales: Horz. 1" = 100'
Vert. 1" = 10'

INDEX OF DRAWINGS

SHEET NO.	TITLES
K-80-16	GENERAL PLAN AND ELEVATION
K-80-17	ABUTMENT 'A'
K-80-18	ABUTMENT 'B' N.B.L.
K-80-19	ABUTMENT 'B' S.B.L. & GEOMETRY LAYOUT
K-80-20	PIERS 1, 4 & 5
K-80-21	PIER 2
K-80-22	PIER 3
K-80-23	FRAMING PLAN N.B.L.
K-80-24	FRAMING PLAN S.B.L.
K-80-25	SLAB PLAN N.B.L.
K-80-26	SLAB PLAN S.B.L.
K-80-27	REINFORCING STEEL SCHEDULE
K-80-28	REINFORCING STEEL SCHEDULE
K-80-1	STANDARD BOLTED BEAM SPLICE DETAILS
K-80-2	TYPICAL STANDARD STEEL DETAILS
K-80-3	STANDARD ABUTMENT & RETAINING WALL DETAILS
K-80-4	LIGHT STANDARD BASE DETAILS
K-38-154	BRIDGE RAILING
K-38-155	BEARING DETAILS
K-56-34	STANDARD ROADWAY EXPANSION DEVICE

GENERAL NOTES

SPECIFICATIONS:

General - Tennessee Department of Highways' Road and Bridge Specifications' 1951 Edition and the Supplemental Specifications and Special Provisions.

Design - AASHO Standard Specifications for Highway Bridges 1965 Edition with Addenda

Capacity - HS 20-44 Loading and the B.P.R. modified loading for Military vehicles

CONCRETE:

All concrete shall be Class 'A'. Chamfer all exposed edges of concrete 1" x 1" unless otherwise shown or noted.

FOUNDATIONS:

The foundations of abutments shall be on piles.

Pile foundations shall be excavated to the pile cut-off elevations shown, rod soundings shall then be made as directed by the Engineer. From the results obtained, the bridge Engineer will decide if piles will be used or the footings carried to rock. The cost of rod soundings shall be included in the price of items bid on.

After excavation to rock for footings has been completed, holes 6' deep shall be drilled at points designated by the Engineer. From the results, obtained the Engineer shall determine final footing elevations. No reinforcing steel for Bent Columns shall be ordered until final footing elevations are determined.

REINFORCEMENT:

All reinforcing steel shall be A.S.T.M. A615. All reinforcing bar dimensions on the detail drawings are to the centerline of bar except where the clear distance is noted from face of concrete.

PILES:

All piles shall be 10BP42 and driven to refusal on rock or a minimum bearing of 55 tons.

FILLS:

Fills at bridge ends are to be in place and thoroughly compacted before driving piles for abutments.

STRUCTURAL STEEL:

Structural Steel shall conform to ASTM A-36 except for portions of beam indicated on beam elevations which shall conform to ASTM A-441.

PAINT:

Basic Lead Silica Chromate. See Special Provisions regarding Section 182 Steel Structures (Painting). No paint shall be applied to the top surfaces of the top flanges. Splices and other field connections shall be cleaned and primed before forming slab.

WELDING:

Welding shall be in accordance with the current edition of the AWS Specifications for Welded Highway and Railway Bridges. See Special Provisions regarding Welding Structures. Cost of Magnetic Particle Inspection to be included in cost of items bid on.

HIGH TENSILE BOLTS:

See notes on Dwg. K-80-25

STUD SHEAR CONNECTORS:

Stud shear connectors shall conform to the requirements of AASHO Standard Specifications for Highway Bridges Art. 2.10.3A & 2.10.23

SHOP INSPECTION OF STEEL STRUCTURE:

The Contractor as soon as he receives his work orders, shall notify the Bridge Engineer, in writing who will supply the structural steel and the location of the plant where it will be fabricated.

FABRICATION OF STRUCTURAL STEEL:

No Fabrication shall be started until the materials involved have been approved by the Tennessee Highway Division of Tests.

Heat numbers on main material must be preserved or transferred during fabrication and shop painting so that they will be identifiable in the field

LIGHTING:

For details of Light Standards and Conduits, see sheet 84 and Std. Dwg. K-80-4.

BRIDGE RAILING:

Build bridge railing according to Standard Drawing K-38-154

Lt. Parapet - Dimension X = 11 13/16", N = 41 Spaces, L = 10'-4"
Rt. Parapet - Dimension X = 1'-4 1/4", N = 41 Spaces, L = 10'-4"

JOINT SEALER:

See Special Provisions, Class 'A' or 'B'

Roadway Varies: 109'-0"± to 117'-4"±

◒ -- Denotes Boring Location
*** These Borings Are Inaccessable.

Boring No	Station	Offset	Ground Elevation	Rock Elevation
1	481+00	51' Rt.	***	***
2	481+00	14' Lt	426.8	415.8
3	481+00	65' Lt.	425.1	***
4	481+65	51' Rt.	438.6	434.6
5	481+64	3' Lt.	435.6	430.6
6	481+63	65' Lt.	433.1	***
7	482+48	50' Rt.	438.4	421.4
8	482+46	2' Lt	438.1	414.1
9	482+44	65' Lt	437.4	428.4
10	483+28	43 Rt.	439.1	416.1
11	483+20	2' Lt	438.1	428.1
12	483+17	39' Lt	438.2	421.2
13	484+02	54' Rt.	440.1	435.1
14	483+97	1' Lt	439.0	433.0
15	483+92	57' Lt.	438.8	431.8
16	484+80	51' Rt.	439.7	436.4
17	484+75	1' Lt	439.9	434.9
18	484+67	70' Lt	439.1	***
19	485+12	55' Rt	439.4	437.4
20	485+05	6' Lt	439.9	437.9
21	485+00	51' Lt.	440.1	439.1

ESTIMATED QUANTITIES

	Excavation Dry C.Y.	Excavation Rock C.Y.	Concrete Class 'A' C.Y.	Reinforcing Steel Lbs.	Steel Structures L.S.*	Bearing Piles 10BP42 L.F.	Bridge Railing L.F.	Linseed Oil Treatment Sq.Yds.**	Rock Drilling L.F.	Reinf Conc Med Barrier L.F.	Structure Lighting L.S.
Superstructure			1302.4	411,320 (5)			852			426	
Abutment 'A'	–	–	66.3	8,430		975			–		
Pier 1	125	25	147.7	30,820		–			42		
Pier 2	215	5	184.5	30,900		570			6		
Pier 3	280	20	216.6 (2)	49,680		495			12		
Pier 4	150	30	144.1	30,170		–			42		
Pier 5	120	35	138.1	28,830		–			42		
Abutment 'B'	–	–	70.5	8,960		495			–		
Total	890	115	2270.2 (2)	599,100 (5)		2535	852	6190	144	426	LUMP SUM

Notes: * Total Estimated Weight Steel Structures 1,264,000 lbs., includes Bearing Devices, Shear Connectors and Weld Materials.
** Special Provision on Linseed Oil Treatment does not apply to bent caps.
(1) Cost of Joint Sealer and Bituminous Fiber Material to be included in items bid on
Cost of 6"ø CPMP and Porous Backfill Material to be included in price of items bid on.
Excavation based on lower road profile.
Cost of Light Standard Base including Concrete Reinforcing and Anchor Bolts to be included in price bid for Bridge Railing.
Lighting Lump Sum is for Complete installation of all Structural Lighting as shown on plans.
(5) Cost of 32-threaded inserts and 32 7/8"ø x 4" Hex Head bolts (A307) to be included in items bid on

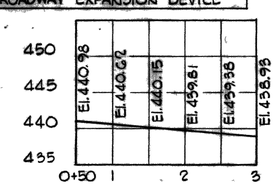

TRACK 'A'
PROFILE GRADE LINE

Scales: Horz. 1" = 100'
Vert. 1" = 10'

For Track & Survey see Sheet K-80-19

DESIGN UNIT STRESSES

Concrete f'c = 1200 P.S.I.
f'c = 3000 P.S.I.
Reinf Steel fs = 20000 P.S.I.
Struct Steel (A36) fs = 20000 P.S.I.
(A441) fs = 27000 P.S.I.

SPECIAL NOTE FOR RAILROAD CROSSING:

The Contractor shall conduct his work so as to protect the railway tracks and properties from damage. The work shall be done in accordance with regulations stipulated by the L & N. RR Co. so as to maintain clearance and not interrupt traffic.

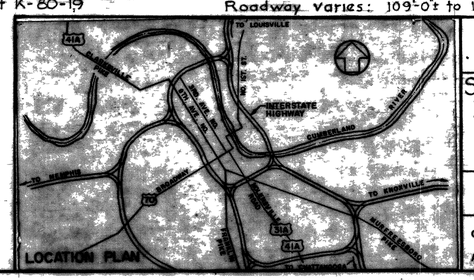

STATE OF TENNESSEE
DEPARTMENT OF HIGHWAYS
NASHVILLE

STRUCTURE NO. 22 AT STA. 484+48.55 I-40
I-40 OVER L & N. RR AND CLINTON ST.
DAVIDSON COUNTY
GENERAL PLAN AND ELEVATION

KNOERLE, BENDER, STONE & ASSOCIATES, INC.
NASHVILLE, TENN. BALTIMORE, MD.

CORRECT _____ BRIDGE ENGINEER
APPROVED _____ STATE HIGHWAY ENGINEER

K-80-16

DESIGNED BY	A.P.S.	DATE	July 68
DRAWN BY	T.L.J.	DATE	Aug. '68
TRACED BY	T.L.J.	DATE	Aug. '68
CHECKED BY	D.S.	DATE	Aug. '68

FED. ROAD DIST. NO.	STATE	FED. AID PROJ. NO.	FISCAL YEAR	SHEET NO.	TOTAL SHEETS
3	TENN.	I-40-4(20)208	1968	105	360

△1 6-2-69 D.W.F. Guardrail Attachment & Wing wall details.

△2 3-2-70 D.P.H. Guardrail Attachment & Wingpost Details.

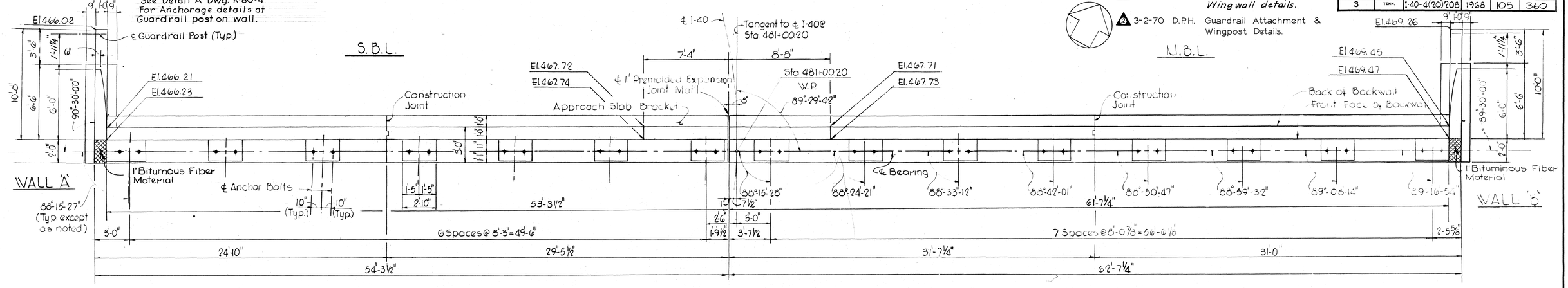

△1 PLAN

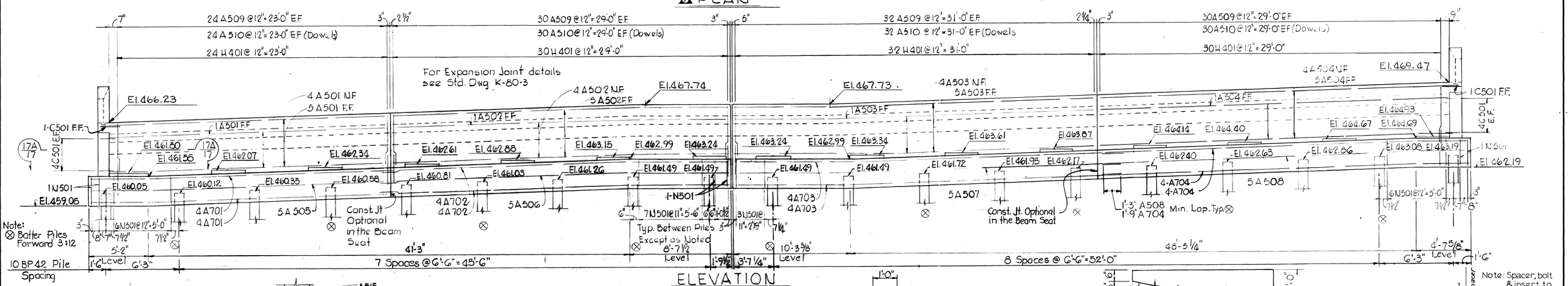

ELEVATION

Scale 1/4" = 1'-0"

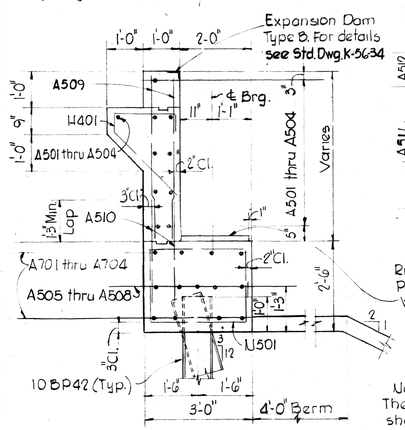

TYPICAL SECTION ABUTMENT 'A'

Scale 1/2" = 1'-0"

Note: The abutment backwall shall not be poured until superstructure is in place. For Details of 6" ϕ C.P.M.P & porous backfill see Dwg. K-80-3

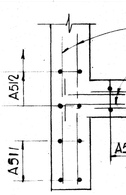

SECTION 17A

Scale 1/2" = 1'-0"

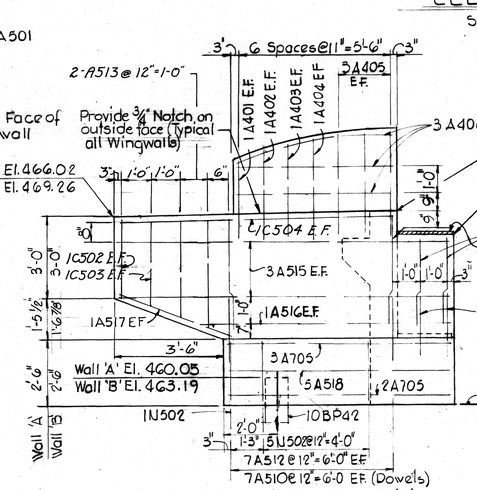

△1 WALL 'A' & WALL 'B'

Scale 3/8" = 1'-0"

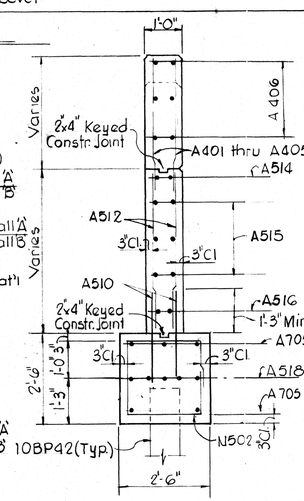

TYPICAL WINGWALL SECTION

Scale: 1/2" = 1'-0"

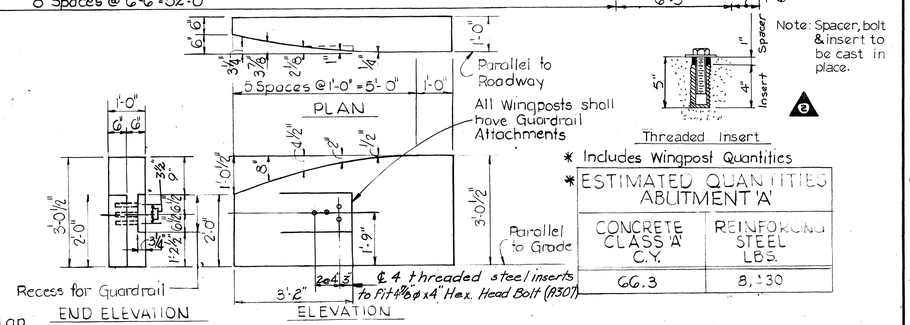

△2 WINGPOST DETAILS

Scale: 1/2" = 1'-0"

* Includes Wingpost Quantities

* ESTIMATED QUANTITIES ABUTMENT 'A'

CONCRETE CLASS 'A' C.Y.	REINFORCING STEEL LBS.
66.3	8,130

NOTES:

1. For additional details of Guardrail attachment see Std. Dwg. RD-A-6A.
2. When pouring abutment beam seat, provisions shall be made for setting anchor bolts. If the Contractor elects to drill the holes for the anchor bolts, the reinforcing steel shall be placed so as not to interfere with the drilling. Bolt projection 4". Use Bearing Device ES 2 on Std Dwg K-38-155
3. Apply Linseed Oil Treatment to the top surface and front face of abutment backwall, top surface of abutment seat, the vertical and top surfaces of wingwalls, the vertical and top surfaces of wing end posts.

STATE OF TENNESSEE
DEPARTMENT OF HIGHWAYS
NASHVILLE

STRUCTURE NO. 22 AT STA. 484+48.55 I-40
I-40 OVER L&N R.R. & CLINTON ST.
DAVIDSON COUNTY
ABUTMENT 'A'

KNOERLE, BENDER, STONE & ASSOCIATES, INC.
NASHVILLE, TENN. BALTIMORE, MD.

CORRECT _____ BRIDGE ENGINEER

APPROVED _____ STATE HIGHWAY ENGINEER

K-80-17

DESIGNED BY	A.P.S.	DATE	July, 1968
DRAWN BY	C. del S.	DATE	Aug., 1968
TRACED BY		DATE	
CHECKED BY	D.S.	DATE	Sept., 1968

MICROFILMED

FED. ROAD DIST. NO.	STATE	FED. AID PROJ. NO.	FISCAL YEAR	SHEET NO.	TOTAL SHEETS
3	TENN.	I-40-4(20) 208	1968	106	360

1 6-2-69 D.W.F. Guardrail Attachment & Wingwall Details.

2 3-2-70 D.P.H. Removed Insert note.

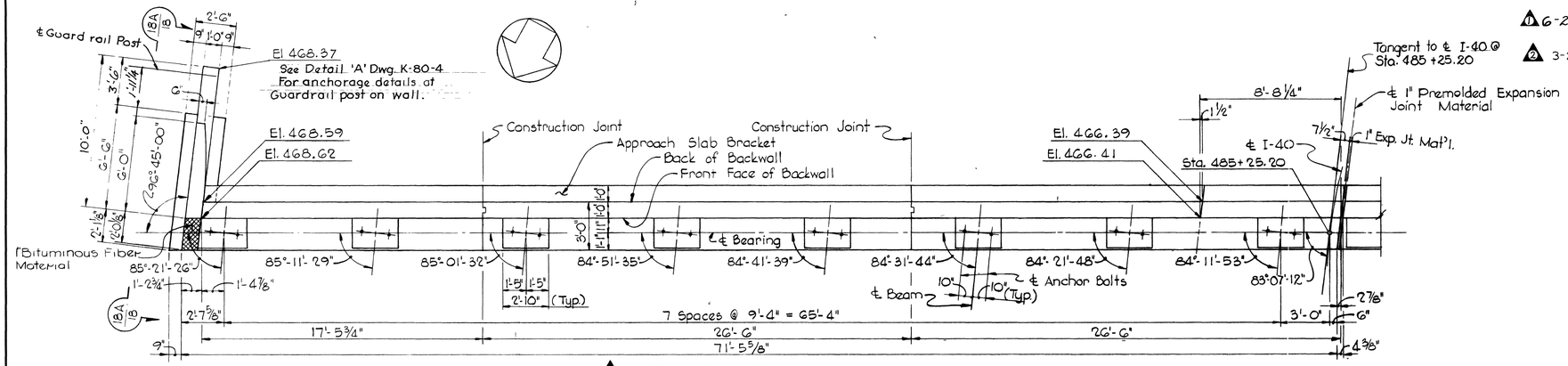

1 PLAN - N.B.L.

Scale: 1/4" = 1'-0"

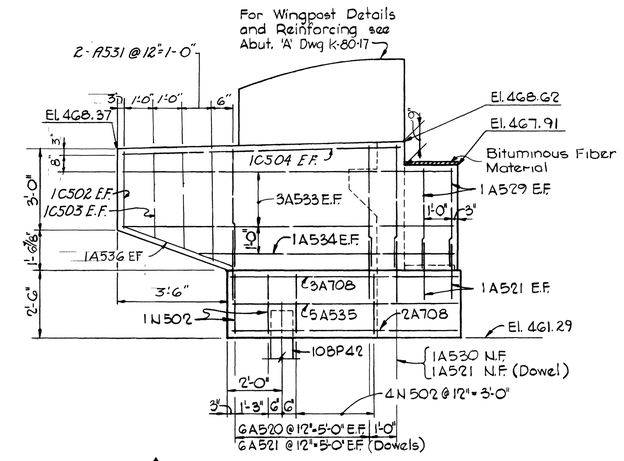

1 VIEW 18 A

Scale: 3/8" = 1'-0"

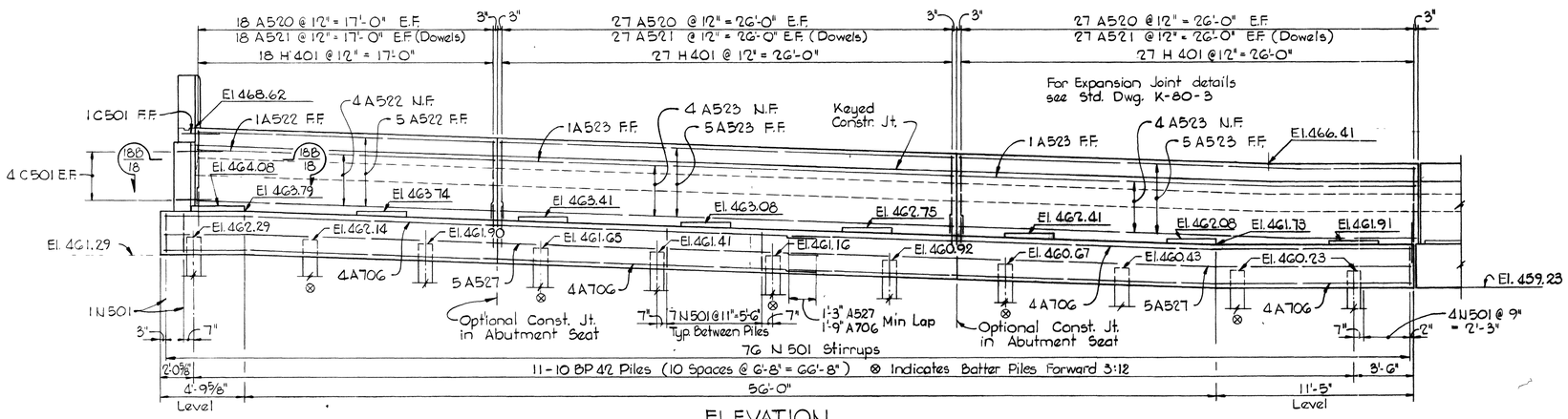

ELEVATION

Scale: 1/2" = 1'-0"

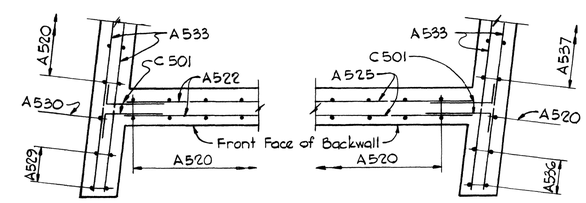

SECTION 18 B

Scale: 1/2" = 1'-0"

SECTION 19 B

Scale: 1/2" = 1'-0"

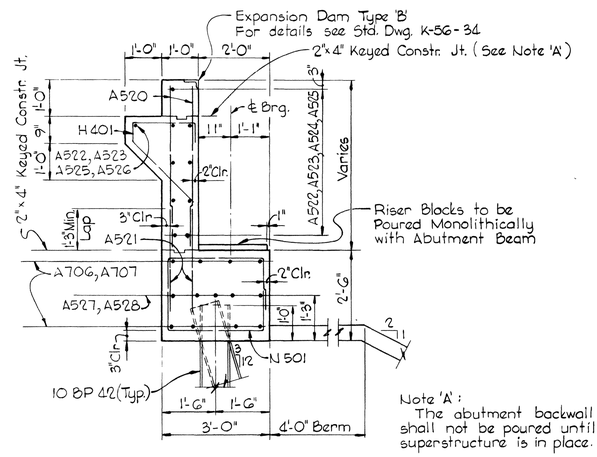

Note 'A': The abutment backwall shall not be poured until superstructure is in place.

TYPICAL SECTION

ABUTMENT 'B'

Scale: 1/2" = 1'-0"

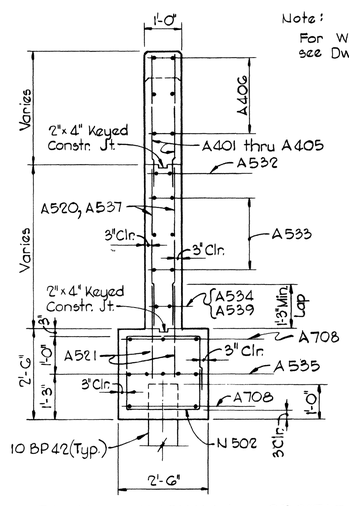

TYPICAL WINGWALL SECTION

Scale: 1/2" = 1'-0"

Notes:

1. When pouring abutment beam seat, provisions shall be made for setting anchor bolts. If the Contractor elects to drill the holes for the anchor bolts, the reinforcing steel shall be placed so as not to interfere with the drilling. Bolt projection 4". Use Bearing Device ES-2 on Standard Drawing K-38-155.
2. For linseed oil treatment see Abutment 'A' Notes Drawing K-80-17
3. For details of 6"ϕ C.P.M.P. and porous backfill see Drawing K-80-3

* Includes Wingpost Quantities

*ESTIMATED QUANTITIES ABUTMENT 'B' S.B.L. & N.B.L.

CONCRETE CLASS 'A' C.Y.	REINFORCING STEEL LBS.
70.5	8,960

DESIGNED BY	A.P.S.	DATE	July '68
DRAWN BY	F.R.O.	DATE	July '68
TRACED BY	F.R.O.	DATE	July '68
CHECKED BY	D.S.	DATE	Sept. '68

STATE OF TENNESSEE
DEPARTMENT OF HIGHWAYS
NASHVILLE

STRUCTURE NO. 22 AT STA. 464+48.55 I-40
I-40 OVER L&N R.R. & CLINTON ST.
DAVIDSON COUNTY
ABUTMENT 'B' N.B.L.

KNOERLE, BENDER, STONE & ASSOCIATES, INC.
NASHVILLE, TENN. BALTIMORE, MD.

CORRECT _____ BRIDGE ENGINEER

APPROVED _____ STATE HIGHWAY ENGINEER

K-80-18

MICROFILMED

FED ROAD DIST NO	STATE	FED AID PROJ. NO.	FISCAL YEAR	SHEET NO	TOTAL SHEETS
3	TENN	I-40-4(20) 208	1968	107	360

1 5-2-69 D.W.F. Guardrail Attachment & Wingwall Details.

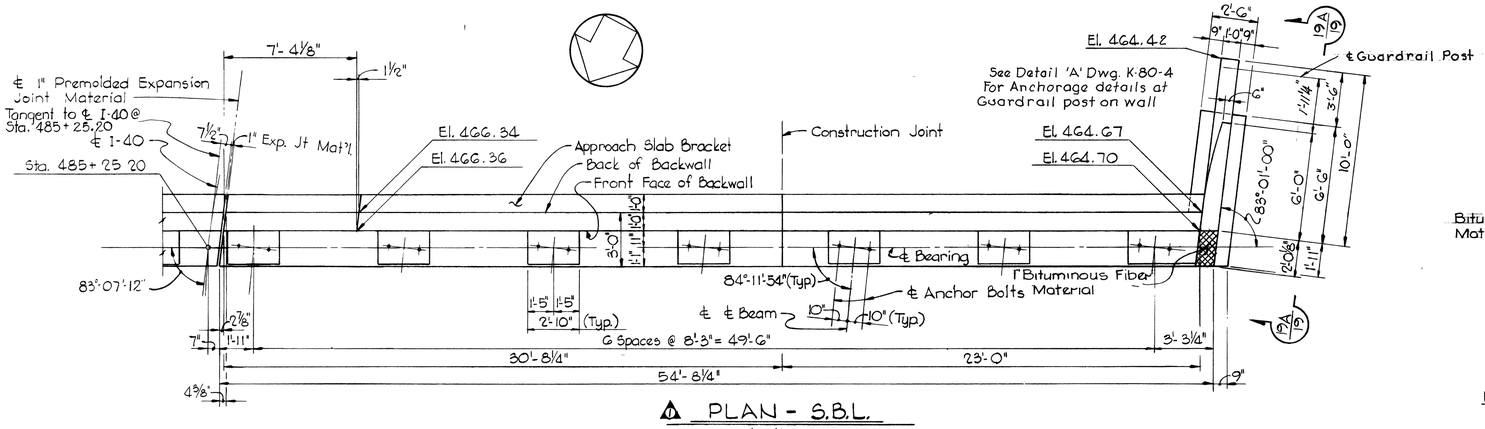

1 PLAN - S.B.L.

Scale: 1/4" = 1'-0"

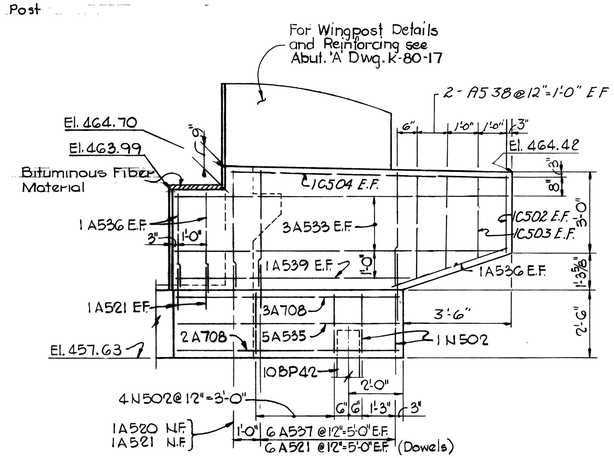

1 VIEW 19 A

Scale: 3/8" = 1'-0"

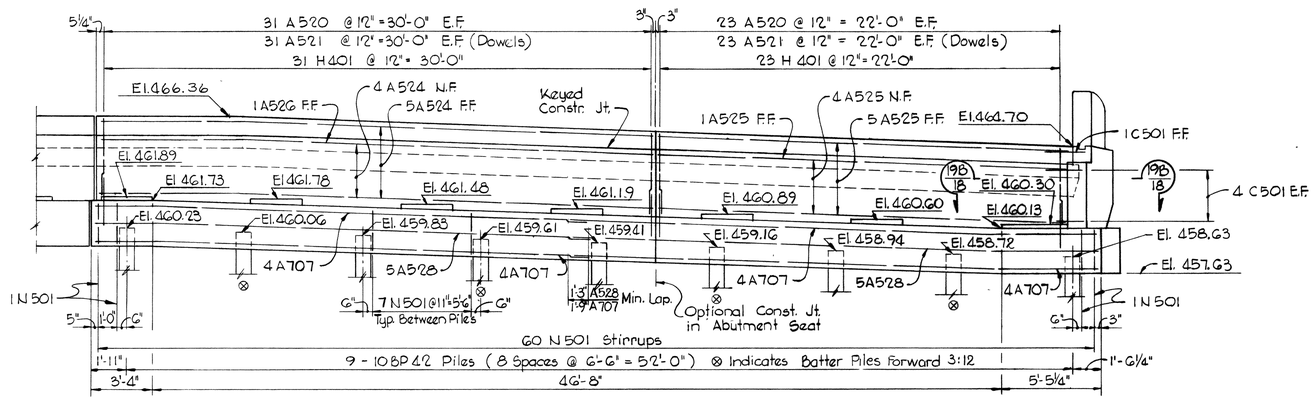

ELEVATION

Scale: 1/4" = 1'-0"

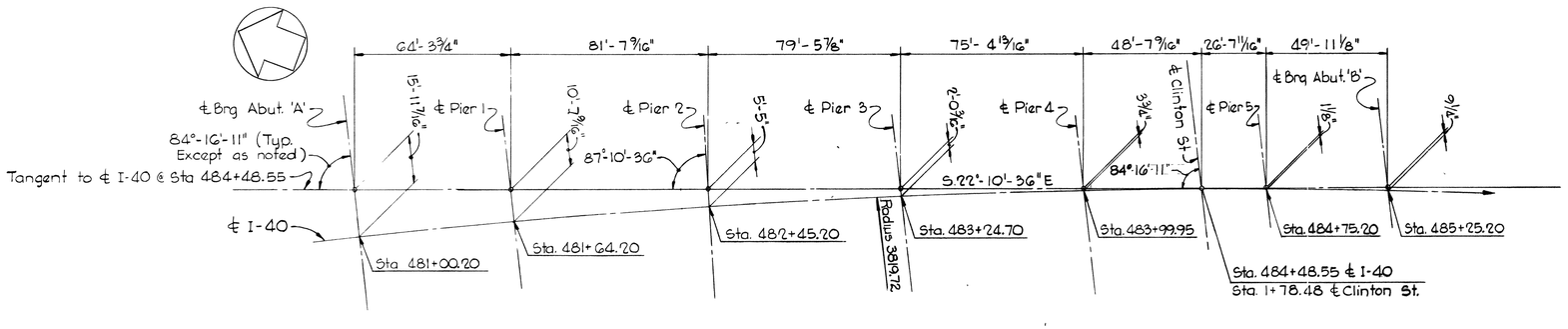

GEOMETRY LAYOUT

Not to Scale

Note:
See Drawing K-80-18 for Abutment Notes.

DESIGNED BY	A.P.S.	DATE	July '68
DRAWN BY	F.R.O.	DATE	Aug. '68
TRACED BY	F.R.O.	DATE	Aug. '68
CHECKED BY		DATE	

Scale: As Noted

STATE OF TENNESSEE
DEPARTMENT OF HIGHWAYS
NASHVILLE

STRUCTURE NO. 22 AT STA. 484+48.55 I-40
I-40 OVER L&N R.R. & CLINTON ST.
DAVIDSON COUNTY
ABUT. 'B' S.B.L. & GEOMETRY LAYOUT

KNOERLE, BENDER, STONE & ASSOCIATES, INC.
NASHVILLE, TENN. BALTIMORE, MD.

CORRECT _____ BRIDGE ENGINEER
APPROVED _____ STATE HIGHWAY ENGINEER

K-80-19

MICROFILMED

FED ROAD DIST NO	STATE	FED AID PROJ NO	FISCAL YEAR	SHEET NO	TOTAL SHEETS
3	TENN	I-40-4(20)208	1968	108	360

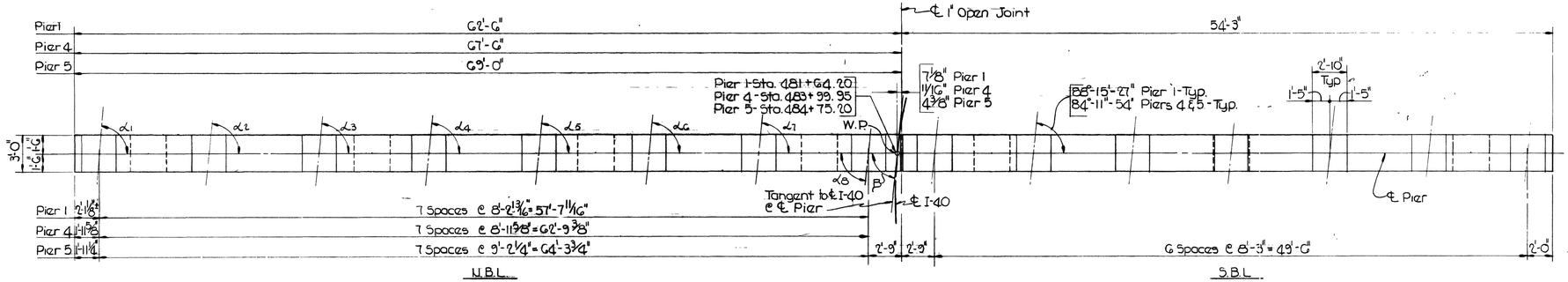

PLAN

Scale : 3/16" = 1'-0"

TABLE OF ANGLES	β	α1	α2	α3	α4	α5	α6	α7	α8
Pier 1	88°-32'-06"	89°-16'-54"	89°-08'-14"	88°-59'-32"	88°-50'-47"	88°-42'-01"	88°-33'-12"	88°-24'-17"	88°-15'-20"
Pier 4	84°-59'-50"	85°-21'-26"	85°-11'-29"	85°-01'-32"	84°-51'-35"	84°-41'-39"	84°-31'-44"	84°-21'-48"	84°-11'-53"
Pier 5	83°-52'-12"	Do	Do	Do	Do	Do	Do	Do	Do

COLUMN HEIGHTS	H1	H2	H3	H4'	H5	H6	H7
Pier 1	32'-0"	30'-6"	28'-9"	27'-3"	27'-3"	24'-9"	22'-6"
Pier 4	28'-3"	27'-6"	26'-9"	26'-6"	25'-0"	24'-6"	23'-9"
Pier 5	26'-0"	25'-6"	24'-9"	24'-3"	22'-0"	21'-3"	20'-6"

Note:

When pouring cap beam, provisions shall be made for setting anchor bolts. If the Contractor elects to drill holes for the anchor bolts, the reinforcing steel shall be placed so as not to interfere with the drilling. Bolt Projection = 6".
Use Bearing Device ES4 on Standard Drawing K-38-155.
See Typical Bearing Detail this drawing.

TABLE OF ELEVATIONS	R	S	T	V	A	B	C	D	E	F	G	H	J	K	L	M	N	P	Q
Pier 1	465.51	463.70	463.70	462.22	465.66	465.39	465.12	464.85	464.58	464.31	464.04	463.97	463.97	463.85	463.58	463.31	463.04	462.77	462.50
Pier 4	465.78	463.72	463.72	462.17	465.93	465.63	465.33	465.02	464.72	464.41	464.11	463.98	463.97	463.87	463.59	463.31	463.02	462.74	462.46
Pier 5	464.72	462.53	462.53	460.94	464.87	464.55	464.23	463.91	463.59	463.27	462.95	462.81	462.80	462.68	462.39	462.10	461.81	461.52	461.23

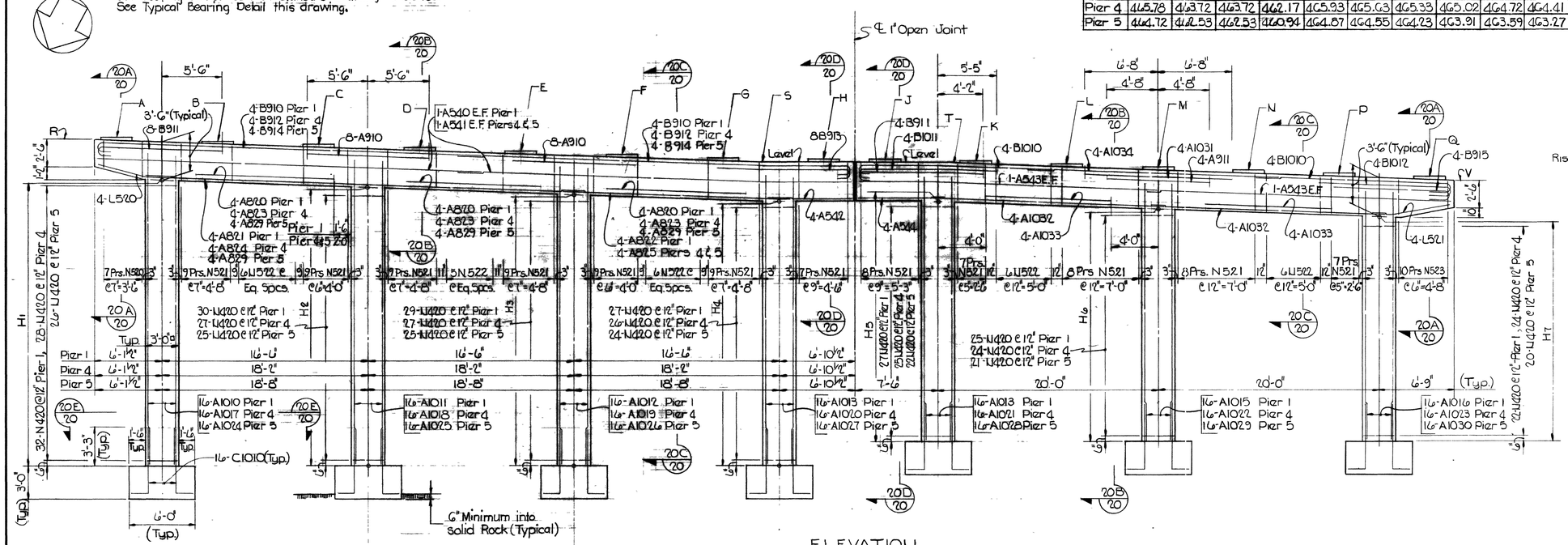

ELEVATION

Scale : 3/16" = 1'-0"

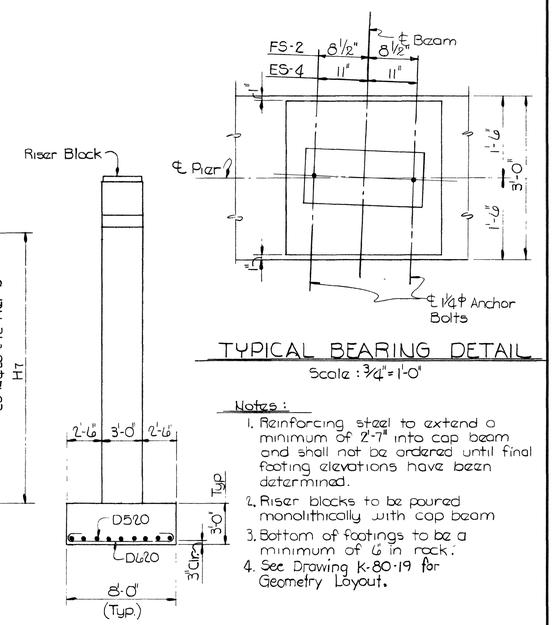

TYPICAL BEARING DETAIL

Scale : 3/4" = 1'-0"

Notes:

1. Reinforcing steel to extend a minimum of 2'-7" into cap beam and shall not be ordered until final footing elevations have been determined.
2. Riser blocks to be poured monolithically with cap beam
3. Bottom of footings to be a minimum of 6 in rock.
4. See Drawing K-80-19 for Geometry Layout.

TYPICAL END ELEVATION

Scale : 3/16" = 1'-0"

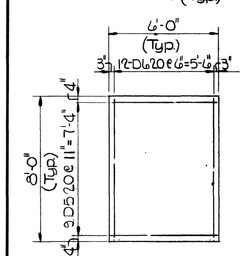

TYPICAL FOOTING PLAN

Scale : 1/4" = 1'-0"

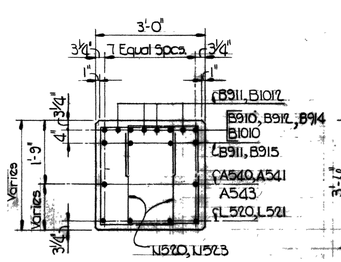

SECTION 20 A

Scale : 1/2" = 1'-0"

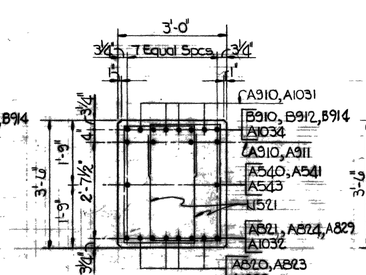

SECTION 20 B

Scale : 1/2" = 1'-0"

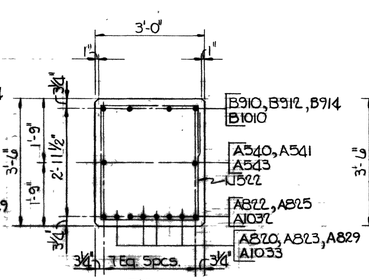

SECTION 20 C

Scale : 1/2" = 1'-0"

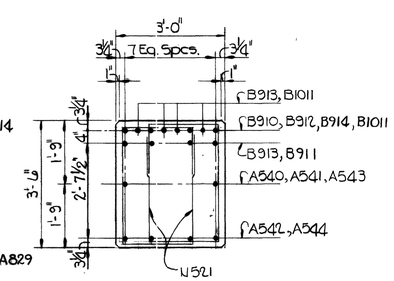

SECTION 20 D

Scale : 1/2" = 1'-0"

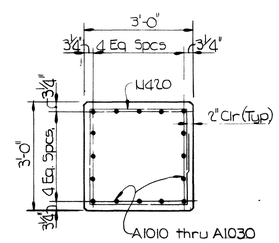

SECTION 20 E

Scale : 1/2" = 1'-0"

ESTIMATED QUANTITIES		
Pier	Concrete Class A C.Y.	Reinforcing Steel C.Y.
1	147.7	30,820
4	144.1	30,170
5	138.1	28,830

STATE OF TENNESSEE
DEPARTMENT OF HIGHWAYS
NASHVILLE

STRUCTURE NO. 22 AT STA. 484+48.55 I-40
I-40 OVER L & N RR. & CLINTON ST
DAVIDSON COUNTY
PIERS 1, 4 & 5

KNOERLE, BENDER, STONE & ASSOCIATES, INC.
NASHVILLE, TENN. BALTIMORE, MD.

CORRECT _____ BRIDGE ENGINEER
APPROVED _____ STATE HIGHWAY ENGINEER

K - 80 - 20

DESIGNED BY	A.P.S. D.S.	DATE	JULY '68
DRAWN BY	G.A.	DATE	JULY '68
TRACED BY	G.A.	DATE	JULY '68
CHECKED BY	D.S.	DATE	SEPT., '68

MICROFILMED

FED ROAD DIST. NO	STATE	FED AID PROJ. NO	FISCAL YEAR	SHEET NO	TOTAL SHEETS
3	TENN	I-40-4(20)208	1968	109	360

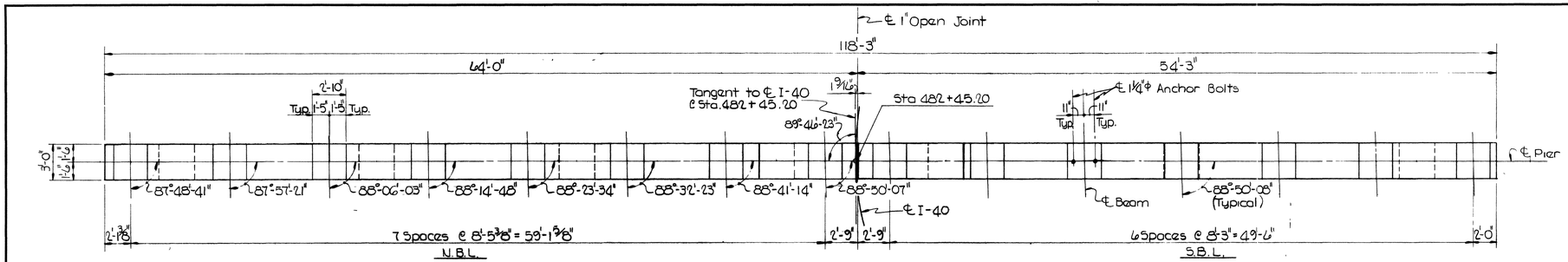

PLAN

Scale: 3/16" = 1'-0"

Note:
When pouring cap beam, provisions shall be made for setting anchor bolts. If the Contractor elects to drill holes for the anchor bolts, the reinforcing steel shall be placed so as not to interfere with the drilling. Bolt Projection = 6".
Use Begring Device ES 4 on Standard Drawing K-38-155
See Typical Bearing Detail Drawing K-80-20.

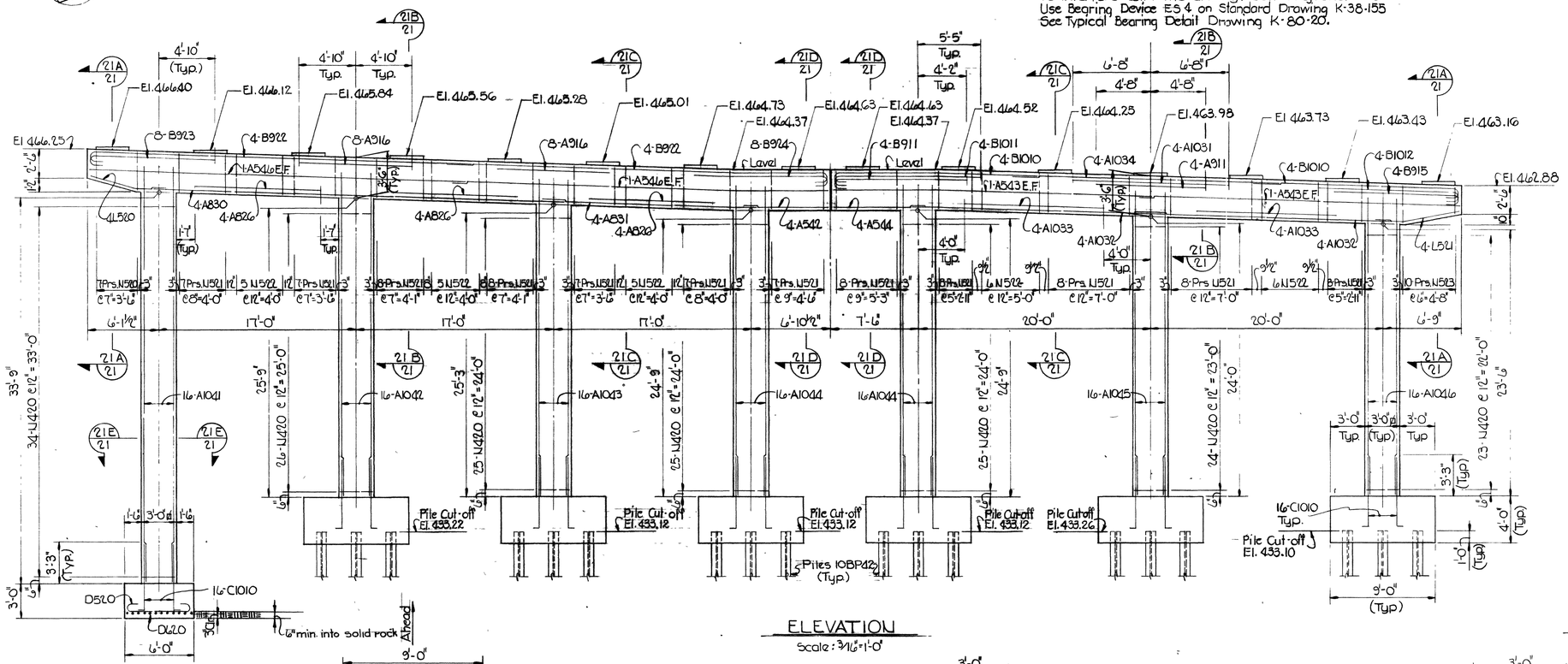

ELEVATION

Scale: 3/16" = 1'-0"

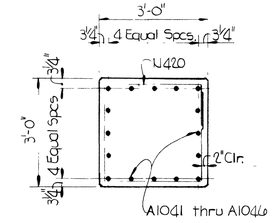

SECTION 21 E

Scale: 1/2" = 1'-0"

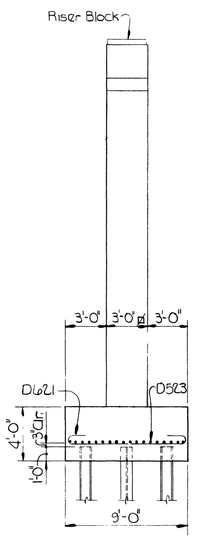

TYPICAL END ELEVATION

Scale: 3/16" = 1'-0"

Notes:

1. Reinforcing steel to extend a minimum of 2'-7" into cap beam and shall not be ordered until final footing elevations have been determined.
2. Riser blocks to be poured monolithically with cap beam
3. See Drawing K-80-19 for Geometry Layout

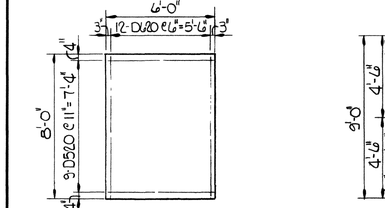

TYPICAL FOOTING ON ROCK

Scale: 1/4" = 1'-0"

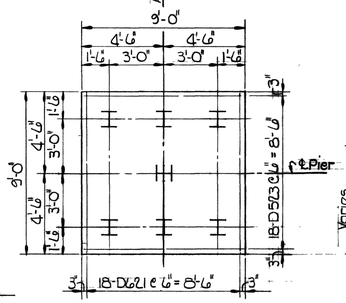

TYPICAL FOOTING ON PILES

Scale: 1/4" = 1'-0"

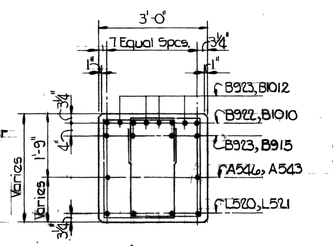

SECTION 21 A

Scale: 1/2" = 1'-0"

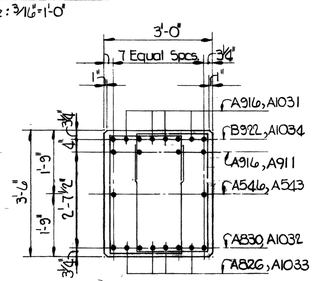

SECTION 21 B

Scale: 1/2" = 1'-0"

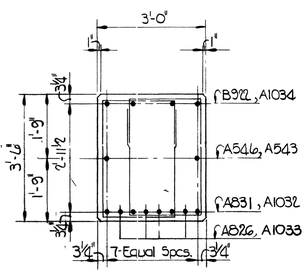

SECTION 21 C

Scale: 1/2" = 1'-0"

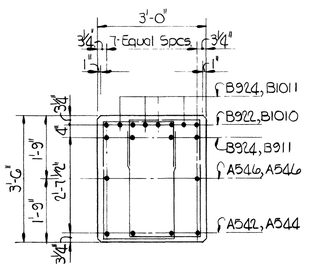

SECTION 21 D

Scale: 1/2" = 1'-0"

ESTIMATED QUANTITIES	
Concrete Class A CY	Reinforcing Steel Lbs
184.5	30,900

STATE OF TENNESSEE
DEPARTMENT OF HIGHWAYS
NASHVILLE

STRUCTURE NO. 22 AT STA. 484+48.55 I-40
I-40 OVER L & N RR. & CLINTON ST
DAVIDSON COUNTY
PIER 2

KNOERLE, BENDER, STONE & ASSOCIATES, INC.
NASHVILLE, TENN. BALTIMORE, MD.

DESIGNED BY	A.P.S. D.S.	DATE	AUGUST '68
DRAWN BY	G.A.	DATE	AUGUST '68
TRACED BY	G.A.	DATE	AUGUST '68
CHECKED BY	D.S.	DATE	SEPT. '68

CORRECT _____ BRIDGE ENGINEER
APPROVED _____ STATE HIGHWAY ENGINEER

K-80-21

MICROFILME

FED. ROAD DIST. NO.	STATE	FED. AID PROJ. NO.	FISCAL YEAR	SHEET NO.	TOTAL SHEETS
3	TENN.	I-40-4(20)208	1968	110	360

REVISION
1. 6-2-69 D.W.F. Removed Construction key
2. 10-2-69 E.R.G. Concrete Quantities

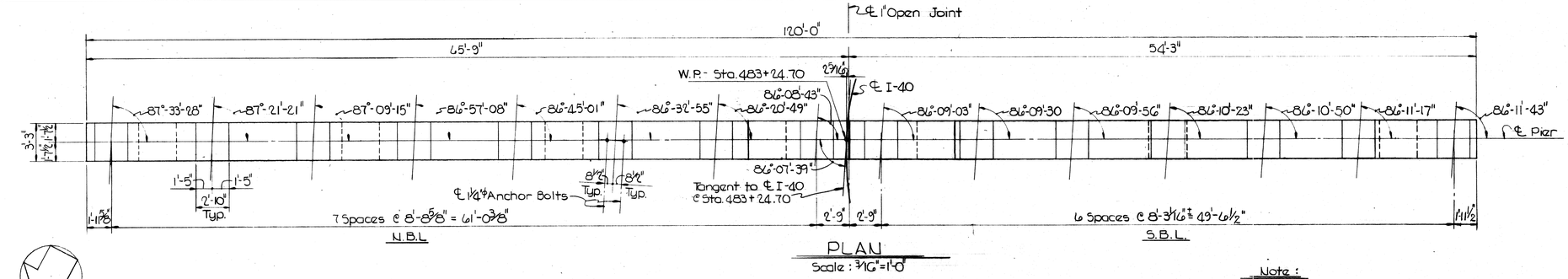

PLAN
Scale : 3/16" = 1'-0"

Note :
When pouring cap beam, provisions shall be made for setting anchor bolts. If the Contractor elects to drill holes for the anchor bolts, the reinforcing steel shall be placed so as not to interfere with the drilling. Bolt Projection = 4".
Use Bearing Device FS2 on Standard Drawing K-38-155
See Typical Bearing Detail Dwg K-80-20.

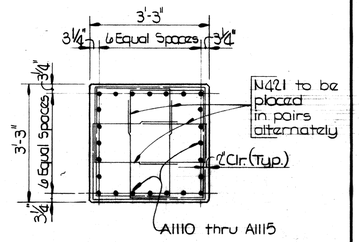

SECTION 22 E
Scale : ½" = 1'-0"

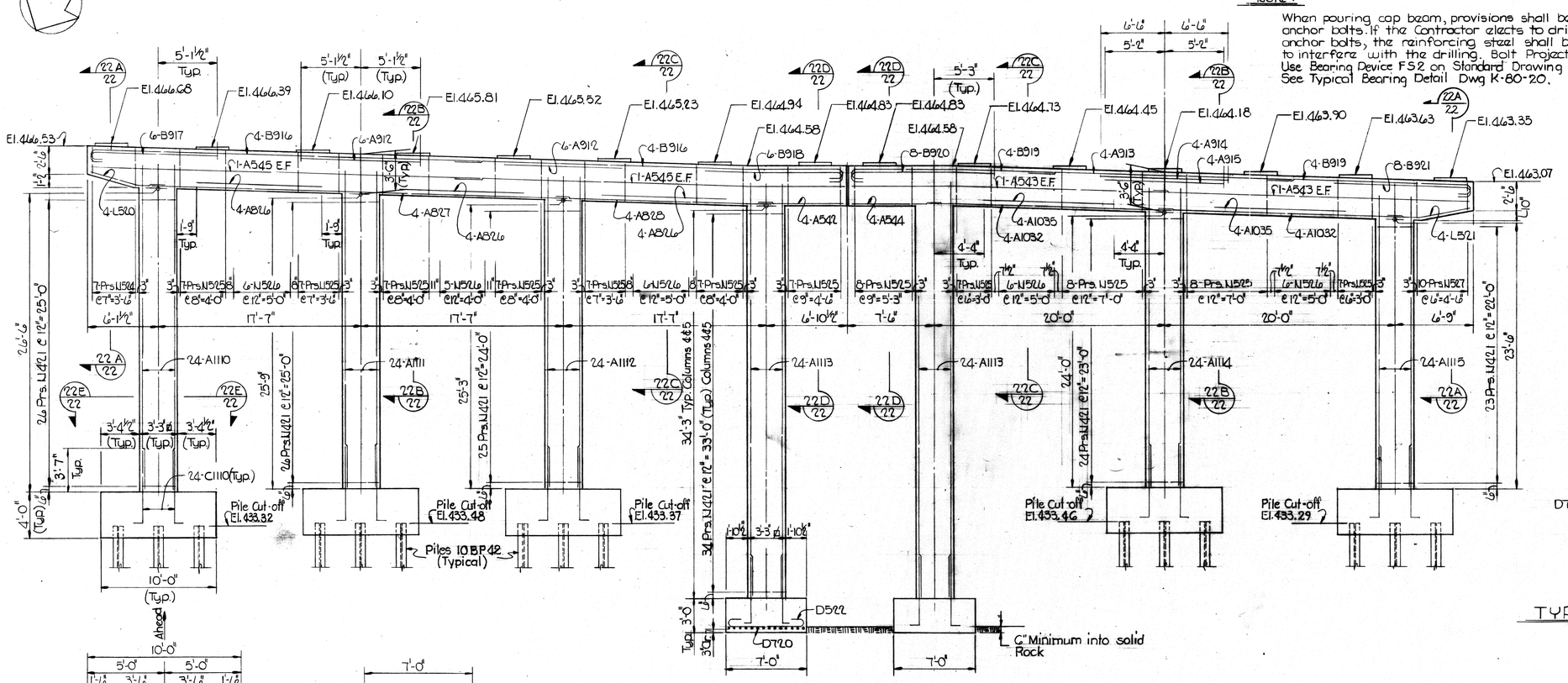

ELEVATION
Scale : 3/16" = 1'-0"

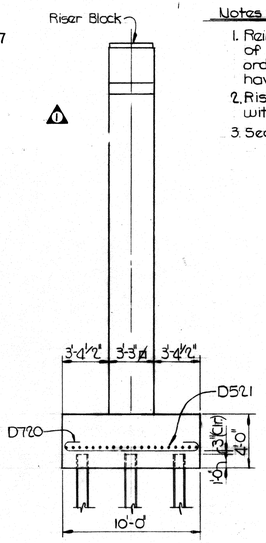

Notes :
1. Reinforcing steel to extend a minimum of 2'-10" into cap beam and shall not be ordered until final footing elevations have been determined.
2. Riser blocks to be poured monolithically with cap beam.
3. See Drawing K-80-19 for Geometry Layout

TYPICAL END ELEVATION
Scale : 3/16" = 1'-0"

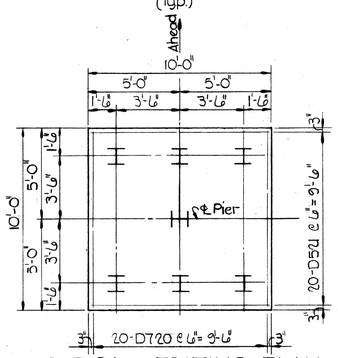

TYPICAL FOOTING PLAN ON PILES

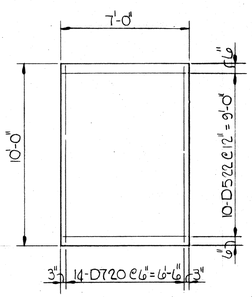

TYPICAL FOOTING PLAN ON ROCK
Scale : ¼" = 1'-0"

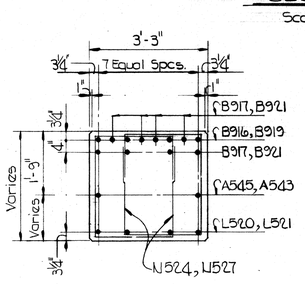

SECTION 22 A
Scale : ½" = 1'-0"

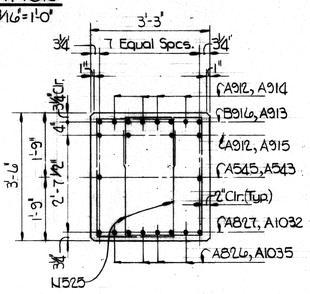

SECTION 22 B
Scale : ½" = 1'-0"

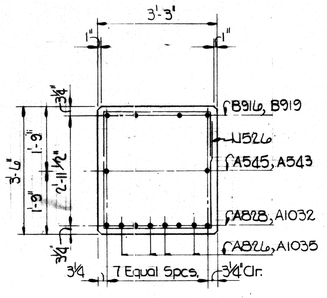

SECTION 22 C
Scale : ½" = 1'-0"

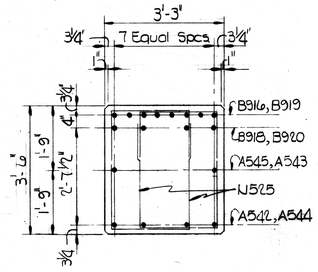

SECTION 22 D
Scale : ½" = 1'-0"

ESTIMATED QUANTITIES

Concrete Class A C.Y.	Reinforcing Steel Lbs.
216.6	49,680

STATE OF TENNESSEE
DEPARTMENT OF HIGHWAYS
NASHVILLE

STRUCTURE NO. 22 AT STA. 484+48.55 I-40
I-40 OVER L & N. RR & CLINTON ST.
DAVIDSON COUNTY
PIER 3

KNOERLE, BENDER, STONE & ASSOCIATES, INC.
NASHVILLE, TENN. BALTIMORE, MD.

CORRECT _____ BRIDGE ENGINEER
APPROVED _____ STATE HIGHWAY ENGINEER

K-80-22

DESIGNED BY A.P.S. D.S. DATE JULY '68
DRAWN BY G.A. DATE JULY '68
TRACED BY G.A. DATE JULY '68
CHECKED BY D.S. DATE SEPT. '68

FED ROAD DIST NO	STATE	FED AID PROJ. NO	FISCAL YEAR	SHEET NO	TOTAL SHEETS
3	TENN	I-40-4(20)208	1968	111	360

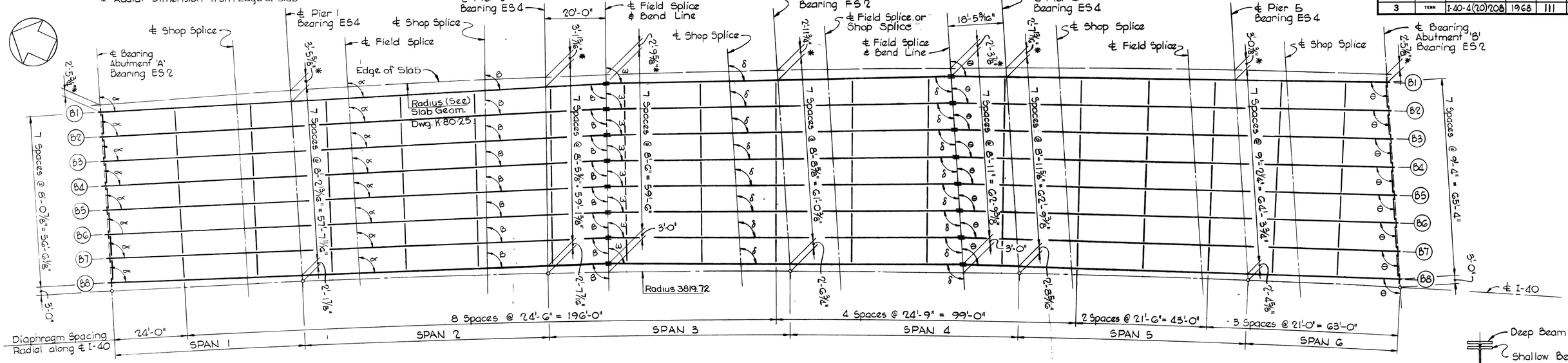

FRAMING PLAN N.B.L.

Scale: 1/16" = 1'-0"

Note:
For Splice Locations not shown see Beam Elevation.

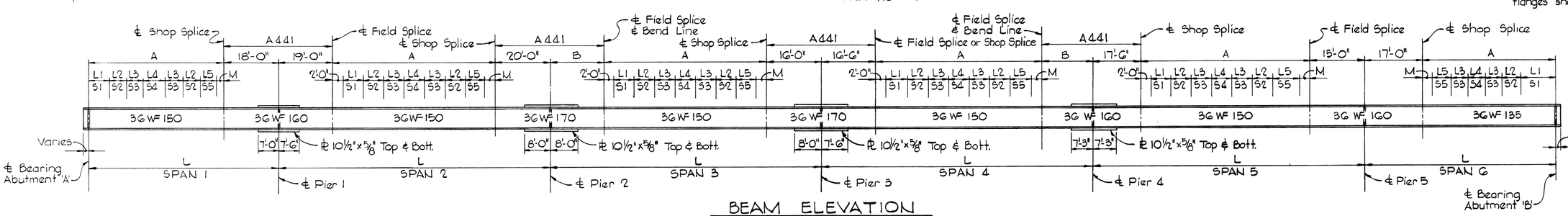

BEAM ELEVATION

Not to Scale

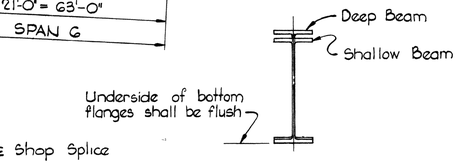

WF POSITIONS AT SPLICE

Not to Scale

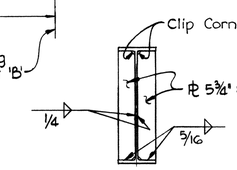

TYPICAL BEARING STIFFENERS AT PIERS

Not to Scale

BEAM SCHEDULE

Span	Beam No.	L Span Length	A	B	Beam Angles α	Beam Angles β	Beam Angles ω	Beam Angles δ	Shear Connector Spacing (3-7/8"φ Studs per row) M	L1	S1	L2	S2	L3	S3	L4	S4	L5	S5
SPAN 1	B1	63'-11 7/8"	45'-11 7/8"	–	90°-43'-06"	–	–	–	1'-11 7/8"	10'-0"	20@6"	6'-8"	10@8"	3'-4"	4@10"	10'-0"	10@12"	4'-0"	8@6"
	B2	63'-11 15/16"	45'-11 15/16"	–	90°-51'-46"	–	–	–	1'-11 15/16"	↑	↑	↑	↑	↑	↑	↑	↑	↑	↑
	B3	64'-0"	46'-0"	–	91°-00'-28"	–	–	–	2'-0"	↑	↑	↑	↑	↑	↑	↑	↑	↑	↑
	B4	64'-0"	46'-0"	–	91°-09'-13"	–	–	–	2'-0"	↑	↑	↑	↑	↑	↑	↑	↑	↑	↑
	B5	64'-0 1/16"	46'-0 1/16"	–	91°-17'-59"	–	–	–	2'-0 1/16"	↑	↑	↑	↑	↑	↑	↑	↑	↑	↑
	B6	64'-0 1/8"	46'-0 1/8"	–	91°-26'-48"	–	–	–	2'-0 1/8"	↑	↑	↑	↑	↑	↑	↑	↑	↑	↑
	B7	64'-0 3/16"	46'-0 3/16"	–	91°-35'-39"	–	–	–	2'-0 3/16"	↑	↑	↑	↑	↑	↑	↑	↑	↑	↑
	B8	64'-0 1/4"	46'-0 1/4"	–	91°-44'-32"	–	–	–	2'-0 1/4"	10'-0"	20@6"	6'-8"	10@8"	3'-4"	4@10"	10'-0"	10@12"	4'-0"	8@6"
SPAN 2	B1	84'-1"	45'-1"	–	90°-43'-06"	87°-48'-41"	–	–	1'-11"	5'-6"	11@6"	6'-8"	10@8"	4'-2"	5@10"	9'-0"	9@12"	5'-0"	10@6"
	B2	83'-7 5/8"	44'-7 5/8"	–	90°-51'-46"	87°-57'-21"	–	–	1'-11 5/8"	5'-6"	11@6"	6'-8"	10@8"	4'-2"	5@10"	9'-0"	9@12"	5'-6"	11@6"
	B3	83'-2 13/16"	44'-2 13/16"	–	91°-00'-28"	88°-06'-03"	–	–	1'-11 13/16"	5'-6"	11@6"	6'-8"	10@8"	4'-2"	5@10"	8'-1"	8@12½	5'-0"	10@6"
	B4	82'-9 11/16"	43'-9 11/16"	–	91°-09'-13"	88°-14'-48"	–	–	1'-11 11/16"	5'-6"	11@6"	6'-0"	9@8"	4'-2"	5@10"	9'-0"	9@12"	5'-0"	10@6"
	B5	82'-4 5/8"	43'-4 5/8"	–	91°-17'-59"	88°-23'-34"	–	–	1'-10 5/8"	5'-6"	11@6"	6'-0"	9@8"	5'-0"	6@10"	7'-0"	7@12"	5'-0"	10@6"
	B6	81'-11 9/16"	42'-11 9/16"	–	91°-26'-48"	88°-32'-23"	–	–	1'-11 9/16"	5'-6"	11@6"	6'-0"	9@8"	4'-2"	5@10"	6'-2"	6@12½	5'-0"	10@6"
	B7	81'-6 7/16"	42'-6 7/16"	–	91°-35'-39"	88°-41'-14"	–	–	1'-10 7/16"	5'-6"	11@6"	6'-8"	10@8"	4'-2"	5@10"	6'-0"	6@12"	5'-6"	11@6"
	B8	81'-1 3/8"	42'-1 3/8"	–	91°-44'-32"	88°-50'-07"	–	–	1'-11 3/8"	5'-6"	11@6"	6'-8"	10@8"	4'-2"	5@10"	6'-0"	6@12"	5'-0"	10@6"
SPAN 3	B1	76'-3 1/2"	40'-3 9/16"	20'-0 9/16"	–	87°-48'-41"	89°-32'-08"	92°-26'-32"	2'-0 5/16"	6'-0"	12@6"	6'-0"	9@8"	3'-4"	4@10"	3'-1"	3@12½	8'-6"	17@6"
	B2	76'-8 3/4"	40'-8 9/16"	20'-0 9/16"	–	87°-57'-21"	89°-44'-49"	92°-38'-39"	1'-11 9/16"	6'-0"	12@6"	6'-0"	9@8"	3'-4"	4@10"	3'-1"	3@12½	9'-0"	18@6"
	B3	77'-2"	41'-1 7/8"	20'-0 1/8"	–	88°-06'-03"	89°-57'-17"	92°-50'-45"	1'-11 7/8"	6'-0"	12@6"	6'-0"	9@8"	3'-4"	4@10"	4'-0"	4@12"	8'-6"	17@6"
	B4	77'-7 5/16"	41'-7 3/16"	20'-0 1/8"	–	88°-14'-48"	90°-09'-35"	93°-02'-52"	1'-11 3/16"	6'-0"	12@6"	6'-0"	9@8"	3'-4"	4@10"	4'-0"	4@12"	9'-0"	18@6"
	B5	78'-0 5/8"	42'-0 1/2"	20'-0 1/8"	–	88°-23'-34"	90°-21'-41"	93°-14'-59"	1'-10 1/2"	6'-0"	12@6"	6'-0"	9@8"	3'-4"	4@10"	5'-0"	5@12"	8'-6"	17@6"
	B6	78'-5 7/8"	42'-5 9/16"	20'-0 1/16"	–	88°-32'-23"	90°-33'-36"	93°-27'-05"	1'-10 13/16"	6'-0"	12@6"	6'-0"	9@8"	3'-4"	4@10"	4'-11"	5@12½	9'-0"	18@6"
	B7	78'-11 1/4"	42'-11 9/16"	20'-0 1/16"	–	88°-41'-14"	90°-45'-20"	93°-39'-11"	1'-10 3/16"	6'-0"	12@6"	6'-0"	9@8"	3'-4"	4@10"	5'-11"	6@12½	8'-6"	17@6"
	B8	79'-4 9/16"	43'-4 1/2"	20'-0 1/16"	–	88°-50'-07"	90°-56'-53"	93°-51'-17"	1'-11 1/2"	6'-0"	12@6"	6'-8"	10@8"	3'-4"	4@10"	4'-11"	5@12½	8'-6"	17@6"

Span	Beam No.	L Span Length	A	B	Beam Angles δ	Beam Angles θ	Shear Connector Spacing (3-7/8"φ Studs per row) M	L1	S1	L2	S2	L3	S3	L4	S4	L5	S5
SPAN 4	B1	75'-1 15/16"	40'-11 9/16"	18'-5 5/16"	92°-26'-32"	94°-38'-34"	1'-10 11/16"	8'-0"	16@6"	6'-8"	10@8"	2'-6"	3@10"	3'-11"	4@12½	6'-0"	12@6"
	B2	75'-1 15/16"	40'-11 9/16"	18'-6"	92°-38'-39"	94°-48'-31"	1'-10 15/16"	↑	↑	↑	↑	↑	↑	↑	↑	↑	↑
	B3	75'-2"	40'-1 15/16"	18'-6 1/16"	92°-50'-45"	94°-58'-28"	1'-10 15/16"	↑	↑	↑	↑	↑	↑	↑	↑	↑	↑
	B4	75'-2 1/8"	40'-2"	18'-6 1/8"	93°-02'-52"	95°-08'-25"	1'-11"	↑	↑	↑	↑	↑	↑	↑	↑	↑	↑
	B5	75'-2 5/16"	40'-2 3/16"	18'-6 1/8"	93°-14'-59"	95°-18'-21"	1'-11 3/16"	↑	↑	↑	↑	↑	↑	↑	↑	↑	↑
	B6	75'-2 1/2"	40'-2 5/16"	18'-6 9/16"	93°-27'-05"	95°-28'-16"	1'-11 5/16"	↑	↑	↑	↑	↑	↑	↑	↑	↑	↑
	B7	75'-2 3/4"	40'-2 1/2"	18'-6 1/4"	93°-39'-11"	95°-38'-12"	1'-11 1/2"	↑	↑	↑	↑	↑	↑	↑	↑	↑	↑
	B8	75'-2 15/16"	40'-2 5/8"	18'-6 5/16"	93°-51'-17"	95°-48'-07"	1'-11 5/8"	8'-0"	16@6"	6'-8"	10@8"	2'-6"	3@10"	3'-11"	4@12½	6'-0"	12@6"
SPAN 5	B1	75'-1 11/16"	42'-7 11/16"	–	–	–	1'-11 11/16"	6'-0"	12@6"	6'-0"	9@8"	3'-4"	4@10"	4'-0"	4@12"	10'-0"	20@6"
	B2	75'-1 7/8"	42'-7 7/8"	–	–	–	1'-11 7/8"	6'-0"	12@6"	6'-0"	9@8"	3'-4"	4@10"	4'-0"	4@12"	10'-0"	20@6"
	B3	75'-2 1/8"	42'-8 1/8"	–	–	–	1'-10 1/8"	6'-0"	12@6"	6'-0"	10@8"	2'-6"	3@10"	4'-0"	4@12"	10'-6"	21@6"
	B4	75'-2 3/8"	42'-8 3/8"	–	–	–	1'-10 3/8"	↑	↑	↑	↑	↑	↑	↑	↑	↑	↑
	B5	75'-2 5/8"	42'-8 5/8"	–	–	–	1'-10 5/8"	↑	↑	↑	↑	↑	↑	↑	↑	↑	↑
	B6	75'-2 7/8"	42'-8 7/8"	–	–	–	1'-10 7/8"	↑	↑	↑	↑	↑	↑	↑	↑	↑	↑
	B7	75'-3 1/8"	42'-9 1/8"	–	–	–	1'-11 1/8"	↑	↑	↑	↑	↑	↑	↑	↑	↑	↑
	B8	75'-3 3/8"	42'-9 3/8"	–	–	–	1'-11 3/8"	6'-0"	12@6"	6'-8"	10@8"	2'-6"	3@10"	4'-0"	4@12"	10'-6"	21@6"
SPAN 6	B1	49'-10 1/16"	32'-10 1/16"	–	–	94°-38'-34"	1'-10 1/16"	10'-0"	20@6"	5'-4"	8@8"	2'-6"	3@10"	4'-0"	4@12"	6'-8"	10@8"
	B2	49'-10 1/4"	32'-10 1/4"	–	–	94°-48'-31"	1'-10 1/4"	↑	↑	↑	↑	↑	↑	↑	↑	↑	↑
	B3	49'-10 3/8"	32'-10 3/8"	–	–	94°-58'-28"	1'-10 3/8"	↑	↑	↑	↑	↑	↑	↑	↑	↑	↑
	B4	49'-10 9/16"	32'-10 9/16"	–	–	95°-08'-25"	1'-10 9/16"	↑	↑	↑	↑	↑	↑	↑	↑	↑	↑
	B5	49'-10 11/16"	32'-10 11/16"	–	–	95°-18'-21"	1'-10 11/16"	↑	↑	↑	↑	↑	↑	↑	↑	↑	↑
	B6	49'-10 7/8"	32'-10 7/8"	–	–	95°-28'-16"	1'-10 7/8"	↑	↑	↑	↑	↑	↑	↑	↑	↑	↑
	B7	49'-11"	32'-11"	–	–	95°-38'-12"	1'-11"	↑	↑	↑	↑	↑	↑	↑	↑	↑	↑
	B8	49'-11 3/16"	32'-11 3/16"	–	–	95°-48'-07"	1'-11 3/16"	10'-0"	20@6"	5'-4"	8@8"	2'-6"	3@10"	4'-0"	4@12"	6'-8"	10@8"

Notes:

1. For General Notes see Dwg. K-80-16
2. For Shoe Details, see Tenn. Std. Dwg. K-38-155
3. For Beam Splice Details, see Dwg. K-80-1, K-80-2
4. For Shear Connector Details, see Dwg. K-80-2
5. For Expansion Dam Details, see Dwg. K-56-34
6. For Cover Plate Welding and termination, see Std. Dwg. K-80-2.

DESIGNED BY APS DATE
DRAWN BY FRO. DATE July '68
TRACED BY FRO DATE July '68
CHECKED BY DS DATE Sept '68

Scale: As Noted

STATE OF TENNESSEE
DEPARTMENT OF HIGHWAYS
NASHVILLE

STRUCTURE NO. 22 AT STA. 484+48.55 I-40
I-40 OVER L&N R.R. & CLINTON ST.
DAVIDSON COUNTY
FRAMING PLAN N.B.L.

KNOERLE, BENDER, STONE & ASSOCIATES, INC.
NASHVILLE, TENN. BALTIMORE, MD.

CORRECT _____ BRIDGE ENGINEER
APPROVED _____ STATE HIGHWAY ENGINEER

K-80-23

FED. ROAD DIST. NO.	STATE	FED. AID PROJ. NO.	FISCAL YEAR	SHEET NO.	TOTAL SHEETS
3	TENN.	I-40-4(20)208	1968	112	360

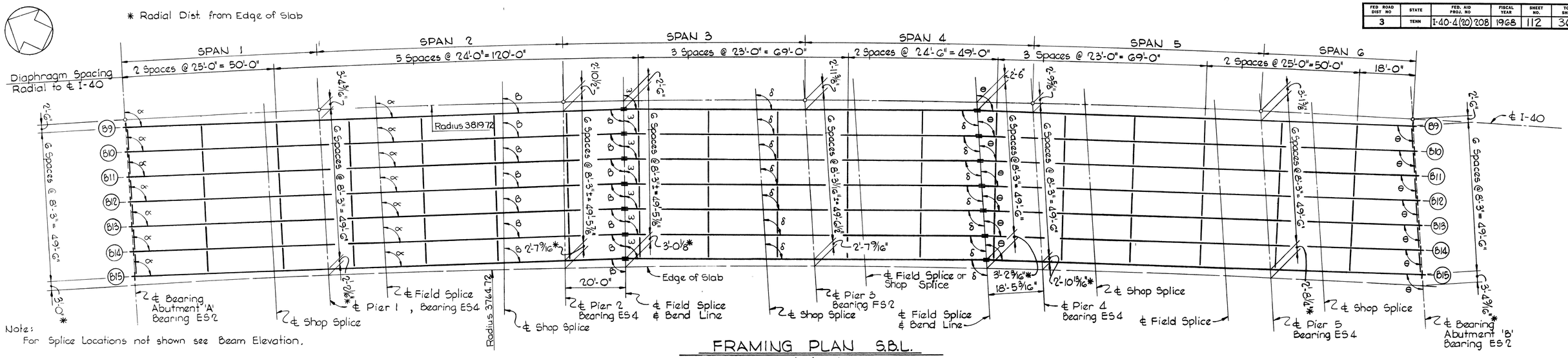

Note:
For Splice Locations not shown see Beam Elevation.

FRAMING PLAN S.B.L.

Scale: 1/16" = 1'-0"

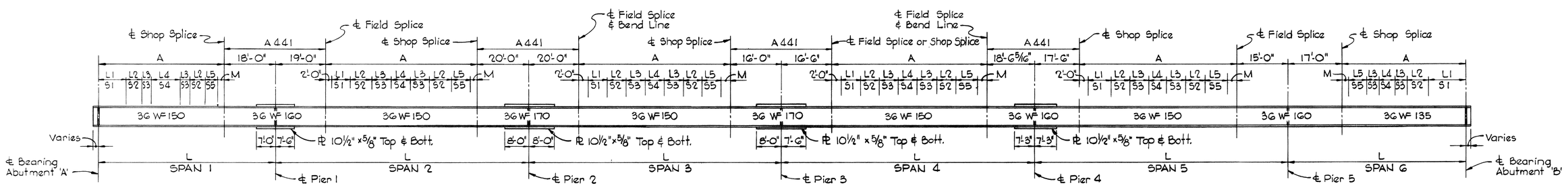

BEAM ELEVATION

Not to Scale

BEAM SCHEDULE

	Beam No.	L Span Length	A	Beam Angles α	β	ω	δ	θ	Shear Connector Spacing – (3-7/8" ϕ Studs per row) M	L1	S1	L2	S2	L3	S3	L4	S4	L5	S5
SPAN 1	B9 thru B15	64'-0¼"	46'-0¼"	91°-44'-33"					2'-0¼"	10'-0"	20@6"	6'-8"	10@8"	3'-4"	4@10"	10'-0"	10@12"	4'-0"	8@6"
SPAN 2	B9	80'-10 1/16"	41'-10 1/16"	91°-44'-33"	88°-50'-08"	—	—	—	2'-0 1/16"	5'-6"	11@6"	6'-8"	10@8"	5'-0"	6@10"	4'-0"	4@12"	5'-0"	10@6"
	B10	80'-5"	41'-5"	↑	↑	—	—	—	1'-11"	5'-6"	11@6"	6'-0"	9@8"	5'-0"	6@10"	5'-0"	5@12"	5'-0"	10@6"
	B11	80'-0"	41'-0"			—	—	—	2'-0"	5'-6"	11@6"	6'-0"	9@8"	5'-0"	6@10"	4'-0"	4@12"	5'-6"	11@6"
	B12	79'-6 15/16"	40'-6 15/16"			—	—	—	1'-11 15/16"	5'-6"	11@6"	6'-0"	9@8"	5'-0"	6@10"	4'-1"	4@12"±	5'-0"	10@6"
	B13	79'-1 15/16"	40'-1 15/16"			—	—	—	1'-11 15/16"	5'-6"	11@6"	6'-8"	10@8"	4'-2"	5@10"	4'-0"	4@12"	5'-0"	10@6"
	B14	78'-8 15/16"	39'-8 15/16"			—	—	—	1'-10 15/16"	5'-6"	11@6"	6'-0"	9@8"	4'-2"	5@10"	5'-0"	5@12"	5'-0"	10@6"
	B15	78'-3 7/8"	39'-3 7/8"	91°-44'-33"	88°-50'-08"	—	—	—	1'-11 7/8"	5'-6"	11@6"	6'-0"	9@8"	4'-2"	5@10"	4'-0"	4@12"	5'-6"	11@6"
SPAN 3	B9	79'-7 7/8"	43'-7 7/8"	—	88°-50'-08"	90°-56'-32"	93°-50'-57"	—	1'-11 7/8"	6'-0"	12@6"	6'-8"	10@8"	4'-2"	5@10"	3'-0"	3@12"	9'-0"	18@6"
	B10	80'-0 7/8"	44'-0 7/8"	—	↑	90°-56'-04"	93°-50'-30"	↑	1'-10 7/8"	6'-0"	12@6"	6'-8"	10@8"	4'-2"	5@10"	3'-0"	3@12"	9'-6"	19@6"
	B11	80'-5 7/8"	44'-5 7/8"	↑		90°-55'-37"	93°-50'-04"		1'-11 7/8"	6'-0"	12@6"	7'-4"	11@8"	4'-2"	5@10"	3'-0"	3@12"	8'-6"	17@6"
	B12	80'-10 15/16"	44'-10 15/16"			90°-55'-10"	93°-49'-37"		1'-10 15/16"	6'-0"	12@6"	7'-4"	11@8"	4'-2"	5@10"	3'-0"	3@12"	9'-0"	18@6"
	B13	81'-3 15/16"	45'-3 15/16"			90°-54'-44"	93°-49'-10"		1'-11 15/16"	6'-0"	12@6"	6'-8"	10@8"	5'-0"	6@10"	3'-0"	3@12"	9'-0"	18@6"
	B14	81'-9"	45'-9"			90°-54'-18"	93°-48'-43"		1'-11"	6'-0"	12@6"	6'-8"	10@8"	5'-0"	6@10"	3'-0"	3@12"	9'-6"	19@6"
	B15	82'-2"	46'-2"	—	88°-50'-08"	90°-53'-52"	93°-48'-17"	—	1'-10"	6'-0"	12@6"	6'-8"	10@8"	5'-0"	6@10"	4'-0"	4@12"	9'-0"	18@6"
SPAN 4	B9	75'-2 7/8"	40'-3 11/16"	—	—	—	93°-50'-57"	95°-48'-06"	1'-11 11/16"	8'-0"	16@6"	6'-8"	10@8"	7'-6"	3@10"	4'-0"	4@12"	6'-0"	12@6"
	B10	↑	↑	—	—	—	93°-50'-30"	↑	↑	↑	↑	↑	↑	↑	↑	↑	↑	↑	↑
	B11			—	—	—	93°-50'-04"												
	B12			—	—	—	93°-49'-37"												
	B13			—	—	—	93°-49'-10"												
	B14			—	—	—	93°-48'-43"												
	B15	75'-2 7/8"	40'-3 11/16"	—	—	—	93°-48'-17"	95°-48'-06"	1'-11 11/16"	8'-0"	16@6"	6'-8"	10@8"	7'-6"	3@10"	4'-0"	4@12"	6'-0"	12@6"
SPAN 5	B9 thru B15	75'-3 3/8"	42'-9 3/16"	—	—	—	—	95°-48'-06"	1'-11 3/8"	6'-0"	12@6"	6'-8"	10@8"	7'-6"	3@10"	4'-0"	4@12"	10'-6"	21@6"
SPAN 6	B9 thru B15	49'-11 3/16"	32'-11 3/16"	—	—	—	—	95°-48'-06"	1'-11 3/16"	10'-0"	20@6"	5'-4"	8@8"	7'-6"	3@10"	4'-0"	4@12	6'-8"	10@8"

DESIGNED BY A.P.S. DATE July '68
DRAWN BY F.R.O. DATE July '68
TRACED BY F.R.O. DATE July '68
CHECKED BY D.S. DATE Sept. '68

DEFLECTION & CAMBER

	SPAN 1 ¼ Pt. Δ1	SPAN 1 Center Pt. Δ2	SPAN 1 ¾ Pt. Δ3	SPAN 2 F.S. Pt. Δ1	SPAN 2 Center Pt. Δ2	SPAN 2 ¾ Pt. Δ3	SPAN 3 F.S. Pt. Δ1	SPAN 3 Center Pt. Δ2	SPAN 3 ¾ Pt. Δ3	SPAN 4 F.S. Pt. Δ1	SPAN 4 Center Pt. Δ2	SPAN 4 F.S. Pt. Δ3	SPAN 5 ¼ Pt. Δ1	SPAN 5 Center Pt. Δ2	SPAN 5 F.S. Pt. Δ3	SPAN 6 ¼ Pt. Δ1	SPAN 6 Center Pt. Δ2	SPAN 6 ¾ Pt. Δ3
Deflection due to Wt. of Steel	1/16"	1/16"	0	0	1/16	0	0	1/8"	1/16"	0	1/16"	0	0	1/16"	1/16"	0	0	0
Deflection due to remaining D.L.	7/16"	1/2"	1/8"	5/16"	9/16"	1/4"	5/16"	5/8"	3/8"	1/4"	3/8"	1/8"	5/16"	9/16"	1/4"	0	1/8"	1/16"
Adjustment reqd. for Vertical Curve	1/2"	5/8"	1/2"	3/4"	1 1/16"	3/4"	3/4"	1"	3/4"	5/8"	7/8"	11/16"	11/16"	7/8"	9/16"	5/16"	3/8"	5/16"
Required Camber	1"	1 3/16"	5/8"	1 1/16"	1 11/16"	1"	1 1/16"	1 3/4"	1 3/16"	7/8"	1 5/16"	13/16	1"	1 1/2"	7/8"	5/16"	1/2"	3/8"

** Includes N.B.L. Quantities

**ESTIMATED QUANTITIES
STRUCTURAL STEEL LBS.
1,264,000

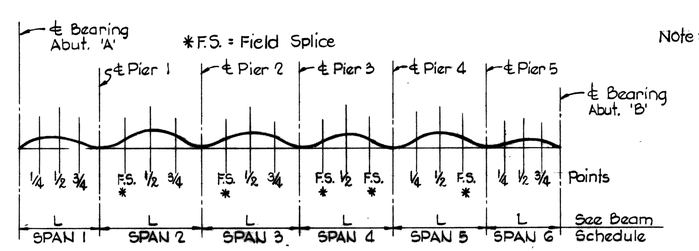

CAMBER DIAGRAM

Not to Scale

Scale: As Noted

Note: See Drawing K-80-23 for Framing Plan Notes.

STATE OF TENNESSEE
DEPARTMENT OF HIGHWAYS
NASHVILLE

STRUCTURE NO. 22 AT STA. 484+48.55 I-40
I-40 OVER L&N R.R. & CLINTON ST.
DAVIDSON COUNTY
FRAMING PLAN S.B.L.

KNOERLE, BENDER, STONE & ASSOCIATES, INC.
NASHVILLE, TENN. BALTIMORE, MD.

CORRECT _____ BRIDGE ENGINEER
APPROVED _____ STATE HIGHWAY ENGINEER

K-80-24

FED ROAD DIST NO	STATE	FED AID PROJ NO	FISCAL YEAR	SHEET NO	TOTAL SHEETS
3	TENN.	I-40-4(20)208	1968	113	360

△1 8-2-71 CEC Typical Cross Section

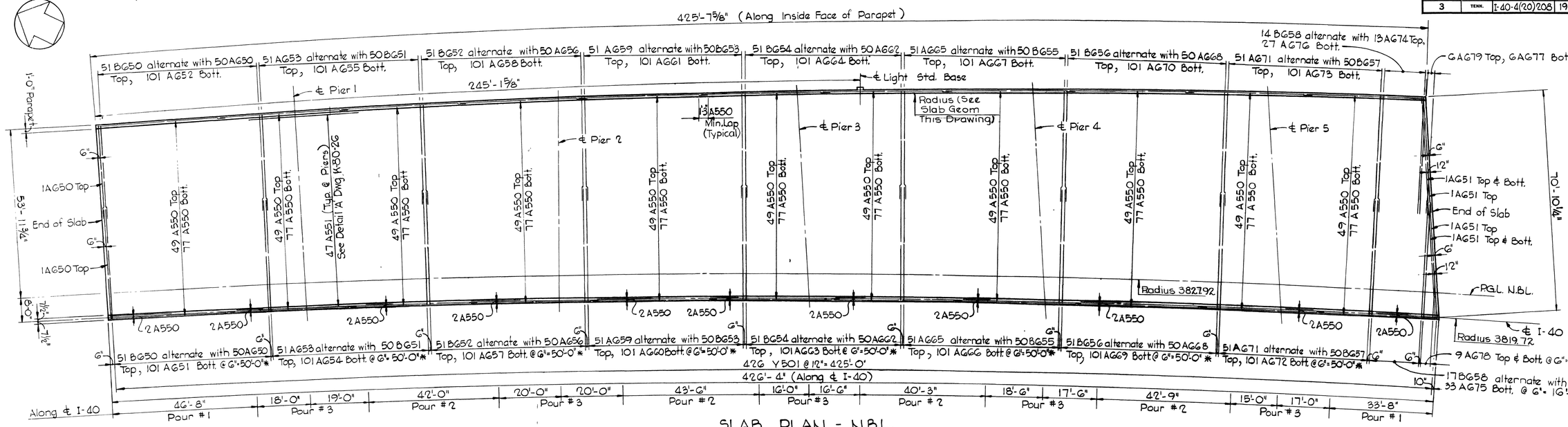

SLAB PLAN - N.B.L.

Scale: 1/16" = 1'-0"

* Along ℄ I-40 and placed radially

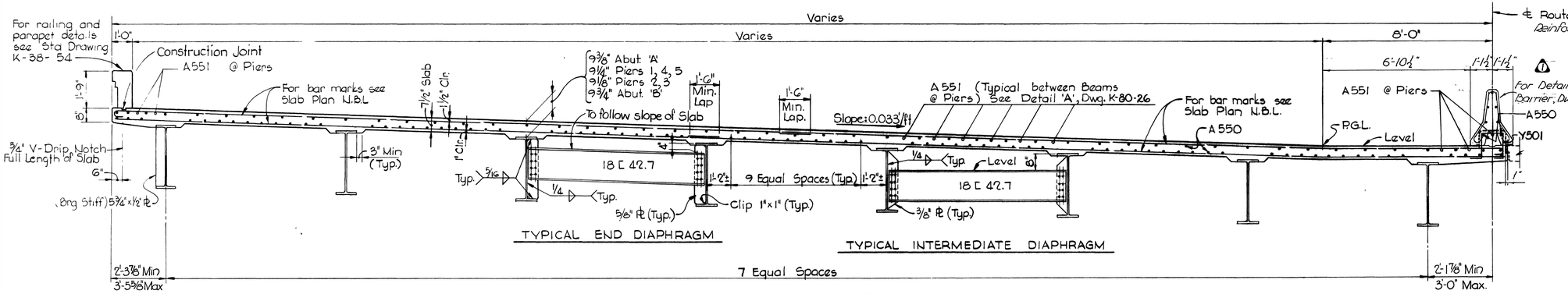

TYPICAL END DIAPHRAGM

TYPICAL INTERMEDIATE DIAPHRAGM

TYPICAL CROSS SECTION N.B.L.

Scale: 3/8" = 1'-0"

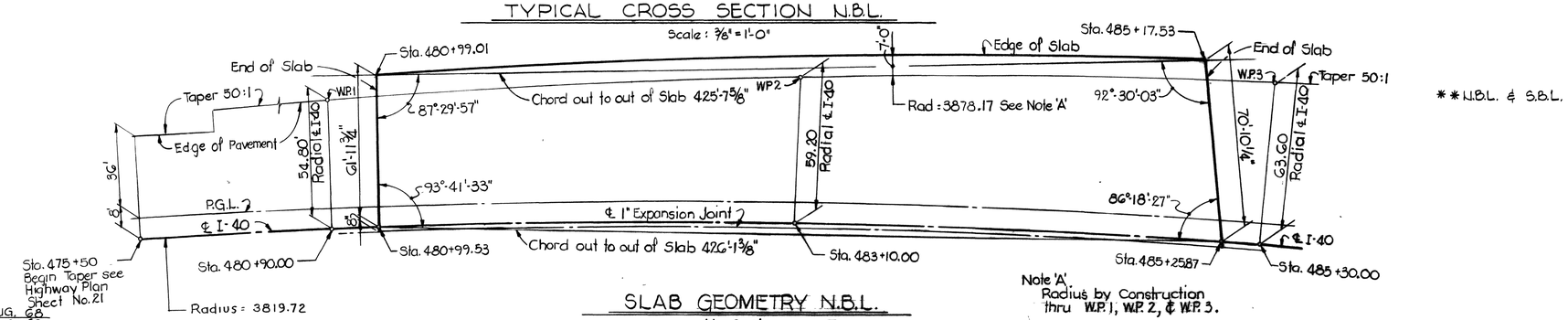

SLAB GEOMETRY N.B.L.

No Scale

Scale: As Noted

NOTES

1. The Concrete Deck shall not be poured until all structural steel is erected and all bolting complete. No portion of the parapet shall be poured until the entire Deck Slab is in place.
2. When pouring Slab, provisions shall be made for setting reinforcing steel for concrete parapet. See State Std. Dwg. K-38-154 for details.
3. For details of Light Std. and Conduits see Dwgs. K-80-4
4. Field Connections shall be 7/8" ϕ high tensile strength bolts A.S.T.M.-A 325 unless otherwise shown. See AASHO Specifications Art. 2-10-20
5. All Pours are to be made in numerical sequence. Pours with the same number designation may be made simultaneously. Dimensions shown for pouring limits are on a line parallel to ℄ Pier

ESTIMATED QUANTITIES	
Concrete Class A ** C.Y.	Reinforcing Steel ** Lbs.
1302.4	339,110

** N.B.L. & S.B.L.

STATE OF TENNESSEE
DEPARTMENT OF HIGHWAYS
NASHVILLE

STRUCTURE NO. 22 AT STA. 484+48.55 I-40
I-40 OVER L&N R.R. & CLINTON ST.
DAVIDSON COUNTY
SLAB PLAN N.B.L.

KNOERLE, BENDER, STONE & ASSOCIATES, INC.
NASHVILLE, TENN. BALTIMORE, MD.

CORRECT _____ BRIDGE ENGINEER
APPROVED _____ STATE HIGHWAY ENGINEER

K-80-25

DESIGNED BY	A.P.S	DATE	AUG. 68
DRAWN BY	F.R.O	DATE	AUG. 68
TRACED BY	F.R.O	DATE	AUG. 68
CHECKED BY	D.S.	DATE	SEPT. 68

FED ROAD DIST NO	STATE	FED AID PROJ NO	FISCAL YEAR	SHEET NO	TOTAL SHEETS
3	TENN	I-40-4(20)208	1968	114	360

△1 8-2-71 CEC Revised Median Barrier Detail
* Along ℄ I-40 and placed radially

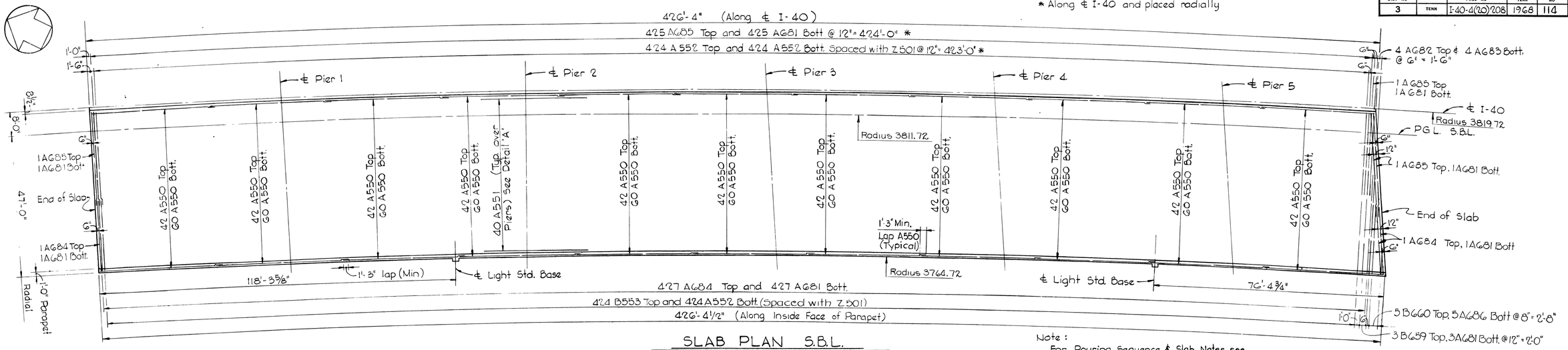

SLAB PLAN S.B.L.

Scale: 1/16" = 1'-0"

Note:
For Pouring Sequence & Slab Notes see Slab Plan - N.B.L. Sht. K-80-25

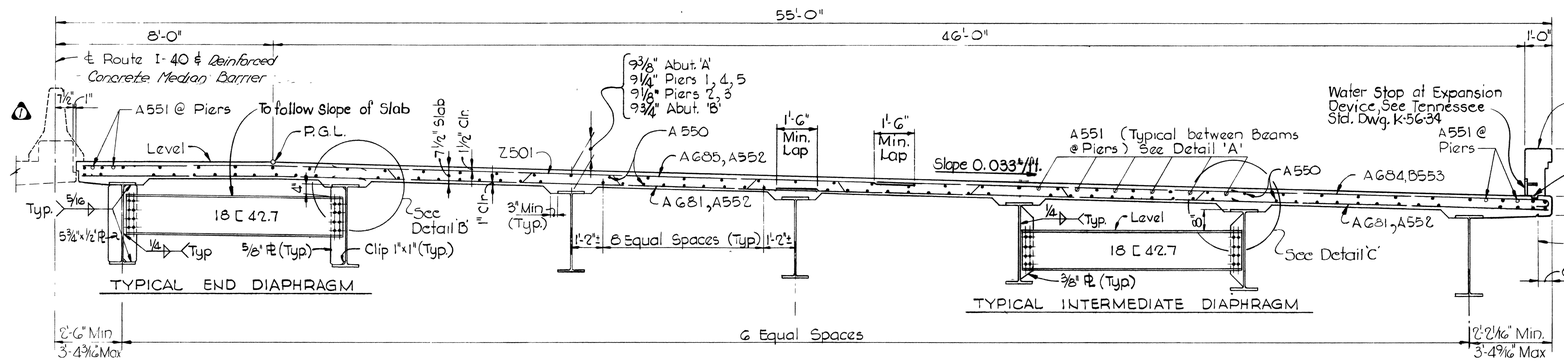

TYPICAL CROSS SECTION S.B.L.

Scale: 3/8" = 1'-0"

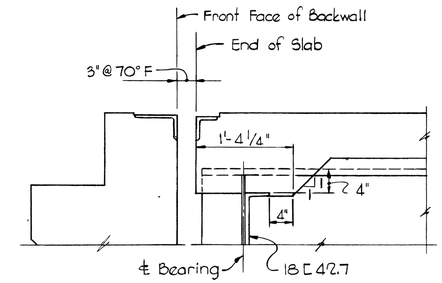

SECTION 26 A

Scale: 1" = 1'-0"

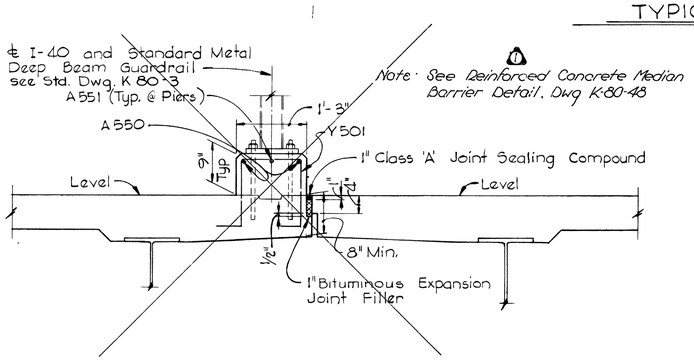

Note: See Reinforced Concrete Median Barrier Detail, Dwg K-80-48

TYPICAL CROSS SECTION AT MEDIAN

Scale: 3/4" = 1'-0"

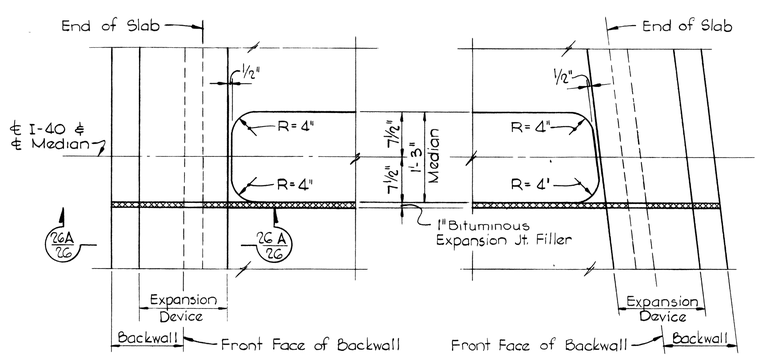

JOINT DETAILS AT ABUTMENTS

Scale: 1" = 1'-0"

Note: For Details of Roadway Expansion Device see Standard Drawing K-56-34

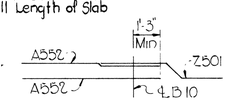

DETAIL 'B'

Not to Scale

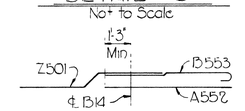

DETAIL 'C'

Not to Scale

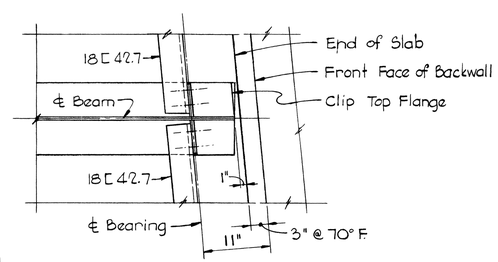

PLAN - END DIAPHRAGM

Scale: 1" = 1'-0"

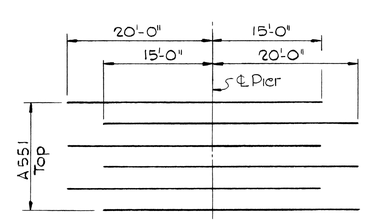

DETAIL 'A'

Not to Scale

Scale: As Noted

STATE OF TENNESSEE
DEPARTMENT OF HIGHWAYS
NASHVILLE

STRUCTURE NO. 22 AT STA. 484+48.55 I-40
I-40 OVER L&N R.R. & CLINTON ST.
DAVIDSON COUNTY
SLAB PLAN S.B.L.

KNOERLE, BENDER, STONE & ASSOCIATES, INC.
NASHVILLE, TENN. BALTIMORE, MD.

CORRECT _____ BRIDGE ENGINEER
APPROVED _____ STATE HIGHWAY ENGINEER

K-80-26

DESIGNED BY	A.P.S.	DATE	AUG. 68
DRAWN BY	F.R.O.	DATE	AUG. 68
TRACED BY	F.R.O.	DATE	AUG. 68
CHECKED BY	D.S.	DATE	SEPT. 68

FED. ROAD DIST. NO.	STATE	FED. AID PROJ. NO.	FISCAL YEAR	SHEET NO.	TOTAL SHEETS
3	TENN.	I-40-4(20)208	1968	115	360

△1 ABUTMENT 'A'

MARK	BAR	NUMBER		SIZE	LENGTH	BENDING DIMENSIONS a	b	c	d	e	f	LOCATION
A401	A	4		4	3'-0"							Wingpost
A402	A	4		4	3'-3"							"
A403	A	4		4	3'-6"							"
A404	A	4		4	3'-8"							"
A405	A	12		4	3'-10"							"
A406	A	12		4	5'-8"							"
H401	H	116		4	5'-0"	6"	1'-8"	6"	2'-4"	1'-7¾"	1'-7¾"	App Slab Seat
A501	A	10		5	23'-8"							Backwall
A502	A	10		5	29'-1"							"
A503	A	10		5	31'-3"							"
A504	A	10		5	29'-10"							"
A505	A	5		5	25'-3"							Abut. Seat
A506	A	5		5	30'-8"							"
A507	A	5		5	31'-3"							"
A508	A	5		5	33'-0"							"
A509	A	232		5	4'-5"							Backwall
A510	A	268		5	3'-0"							"
A511	A	8		5	3'-7"							Wingwall
A512	A	28		5	4'-4"							"
△1 A513	A	8		5	3'-6" & 3'-11" (4 ea. length)							Wingwall
												"
A515	A	12		5	11'-8"							"
A516	A	4		5	9'-0"							"
A517	A	4		5	3'-11"							"
A518	A	10		5	8'-2"							Wingwall Ftg.
C501	C	18		5	2'-3"	1'-6"	9"					Wingwall
C502	C	4		5	3'-3"	2'-8"	8"					"
△1 C503	C	4		5	3'-8"	3'-1"	8"					" △1
N501	N	126		5	10'-5"	2'-7"	2'-0"	1'-3"				Footing
N502	N	12		5	9'-3"	2'-0"	2'-0"	1'-3"				"
A701	A	8		7	25'-3"							Abut. Seat
A702	A	8		7	31'-2"							"
A703	A	8		7	31'-3"							"
A704	A	8		7	33'-6"							"
A705	A	10		7	8'-2"							Wingwall Ftg.
△1 C504	C	4		5	10'-1"	9'-6"	8"					Wingwall

△1 ABUTMENT 'B'

MARK	BAR	NUMBER		SIZE	LENGTH	BENDING DIMENSIONS a	b	c	d	e	f	LOCATION
A401	A	4		4	3'-0"							Wingpost
A402	A	4		4	3'-3"							"
A403	A	4		4	3'-6"							"
A404	A	4		4	3'-8"							"
A405	A	12		4	3'-10"							"
A406	A	12		4	5'-8"							"
H401	H	126		4	5'-0"	6"	1'-8"	6"	2'-4"	1'-7¾"	1'-7¾"	App Slab Seat
A520	A	265		5	4'-4"							Bkwl & Wingwall
A521	A	286		5	3'-0"							Backwall
A522	A	10		5	17'-4							Backwall
A523	A	20		5	26'-2"							"
A524	A	9		5	30'-3"							"
A525	A	10		5	22'-10"							"
A526	A	1		5	30'-1"							"
A527	A	10		5	36'-7"							Abut. Seat
A528	A	10		5	28'-2"							"
A529	A	4		5	3'-9"							Wingwall
A530	A	2		5	4'-7"							"
A531	A	4		5	3'-6" & 3'-11" (2 ea. length)							"
A533	A	12		5	11'-7"							"
A534	A	2		5	9'-1"							"
A535	A	10		5	8'-1"							"
A536	A	2		5	4'-0"							"
A537	A	12		5	4'-2"							"
A538	A	4		5	3'-5" & 3'-9" (2 ea. length)							"
A539	A	2		5	8'-5"							"
C501	C	18		5	2'-3"	1'-6"	9"					Wingwall
C502	C	4		5	3'-3"	2'-8"	8"					"
C503	C	4		5	3'-8"	3'-1"	8"					"
N501	N	136		5	10'-5"	2'-7"	2'-0"	1'-3"				Abut. Seat
N502	N	12		5	9'-3"	2'-0"	2'-0"	1'-3"				Footing
A706	A	16		7	36'-10"							Abut Seat
A707	A	16		7	28'-5"							"
A708	A	10		7	8'-1"							Wingwall
C504	C	4		5	10'-1"	9'-6"	8"					Wingwall

MARK	BAR	NUMBER		SIZE	LENGTH	BENDING DIMENSIONS a	b	c	d	e	f	LOCATION

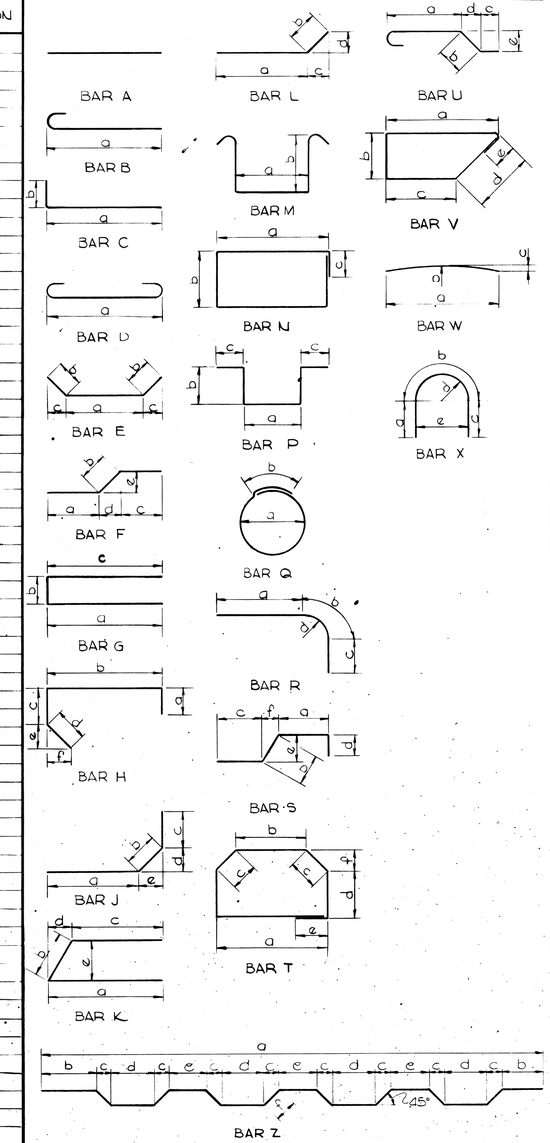

△1 6-2-69 D.W.F. Guardrail Attachment

NOTES:

1. Reinforcing steel detailed as per Manual of Standard Practice for Reinforced Concrete Structures A.C.I.
2. Standard Hooks as recommended by C.R.S.I. shall apply unless otherwise noted.
3. Bar dimensions are out to out.

DESIGNED BY	A.P.S.	DATE	AUG. 68
DRAWN BY	D.L.S.	DATE	AUG. 68
TRACED BY	D.L.S.	DATE	AUG 68
CHECKED BY	D.S.	DATE	SEPT. 68

STATE OF TENNESSEE
DEPARTMENT OF HIGHWAYS
NASHVILLE

STRUCTURE NO. 22 AT STA. 484+28.55 I-40
I-40 OVER L&N R.R. & CLINTON ST.
DAVIDSON COUNTY
REINFORCING ST. FL. SCHEDULE

KNOERLE, BENDER, STONE & ASSOCIATES, INC.
NASHVILLE, TENN. BALTIMORE, MD.

CORRECT _____ BRIDGE ENGINEER
APPROVED _____ STATE HIGHWAY ENGINEER

K-80-27

FED. ROAD DIST. NO.	STATE	FED. AID PROJ. NO.	FISCAL YEAR	SHEET NO.	TOTAL SHEETS
3	TENN.	I-40-4(20)208	1968	116	360

SLAB

MARK	BAR	NUMBER	SIZE	LENGTH	BENDING DIMENSIONS a	b	c	d	e	f	LOCATION
A550	A	2530	5	39'-11"							Slab
A551	A	435	5	35'-0"							"
A552	A	1272	5	12'-9"							"
A653	A	102	6	32'-6"							Slab
A651	A	107	6	36'-4"							"
A652	A	101	6	28'-6"							"
A653	A	102	6	32'-11"							"
A654	A	103	6	37'-1"							"
A655	A	101	6	28'-9"							"
A656	A	100	6	33'-5"							"
A657	A	101	6	37'-7"							"
A658	A	101	6	29'-3"							"
A659	A	102	6	33'-11"							"
A660	A	101	6	38'-3"							"
A661	A	101	6	29'-7"							"
A662	A	100	6	34'-5"							"
A663	A	101	6	38'-10"							"
A664	A	101	6	30'-0"							"
A665	A	102	6	34'-11"							"
A666	A	101	6	39'-5"							"
A667	A	101	6	30'-5"							"
A668	A	100	6	35'-5"							"
A669	A	101	6	30'-0"							"
A670	A	101	6	30'-10"							"
A671	A	102	6	35'-11"							"
A672	A	101	6	40'-7"							"
A673	A	101	6	31'-3"							"
A674	A	29	6	36'-1"							"
A675	A	33	6	40'-9"							"
A676	A	27	6	31'-5"							"
A677	A	6	6	6'-7" to 27'-10" (1 Ea.) V.B. (4'-3")							"
A678	A	18	6	6'-10" to 40'-10" (2 Ea.) V.B. (4'-3")							"
A679	A	6	6	11'-3" to 32'-6" (1 Ea.) V.B. (4'-3")							"
A681	A	868	6	27'-9"							"
A682	A	4	6	18'-6" to 31'-0" (1 Ea.) V.B. (4'-2")							"
A683	A	4	6	14'-9" to 27'-3" (1 Ea.) V.B. (4'-2")							"
B650	B	102	6	33'-2"	32'-6"						Slab
B651	B	100	6	33'-7"	32'-11"						"
B652	B	102	6	34'-1"	33'-5"						"
B653	B	100	6	34'-7"	33'-11"						"
B654	B	102	6	35'-1"	34'-5"						"
B655	B	100	6	35'-7"	34'-11"						"
B656	B	102	6	36'-1"	35'-5"						"
B657	B	100	6	36'-7"	35'-11"						"
B658	B	31	6	36'-9"	36'-1"						"
B659	B	3	6	24'-8"	24'-0"						"
B660	B	5	6	12'-5" to 37'-5" (1 Ea.) V.B. (6'-3") ← 11'-9" to 36'-9"							"
B553	B	424	5	13'-4"	12'-9"						Slab
A684	A	430	6	24'-0"							Slab
A685	A	429	6	32'-0"							"
A686	A	5	6	11'-9" to 36'-9" (1 Ea.) V.B. (6'-3")							"
Z501	Z	424	5	40'-4"	39'-0"	4'-9"	5"	3'-11"	3'-6"	7"	
				REINFORCED CONCRETE MEDIAN BARRIER							
A401	A	55	4	39'-8"							Median Barrier
AB401	AB	426	4	2'-6"	1'-0"	1'-0"					"
X401	X	214	4	2'-2"	8½"	11"	8½"	3½"	7"		Median Barrier

PIERS

MARK	BAR	NUMBER Pier 1	Pier 2	Pier 3	Pier 4	Pier 5	SIZE	LENGTH	BENDING DIMENSIONS a	b	c	d	e	f	LOCATION
A540	A	4					5	31'-9"							Cap
A541	A				4	4	5	35'-0"							"
A542	A	4	4	4	4	4	5	7'-4"							"
A543	A	4	4	4	4	4	5	27'-7"							"
A544	A	4	4	4	4	4	5	8'-0"							"
A545	A			4			5	33'-4"							"
A546	A		4				5	32'-6"							"
A820	A	12					8	10'-6"							Cap
A821	A	4					8	35'-0"							"
A822	A	4					8	18'-6"							"
A823	A				12		8	11'-2"							"
A824	A				4	4	8	39'-4"							"
A825	A				4	4	8	20'-8"							"
A826	A		12	12			8	10'-10"							"
A827	A			4			8	37'-2"							"
A828	A			4			8	19'-7"							"
A829	A					12		11'-8"							"
A830	A		4				8	36'-0"							Cap
A831	A		4				8	19'-0"							"
A910	A	16			16	16	9	11'-0"							Cap
A911	A	4	4		4	4	9	9'-4"							"
A912	A			12			9	10'-3"							"
A913	A			4			9	23'-1"							"
A914	A			4			9	13'-0"							"
A915	A			4			9	10'-4"							"
A916	A		16				9	9'-8"							"
A1010	A	16					10	34'-7"							Column
A1011	A	16					10	33'-1"							"
A1012	A	16					10	31'-4"							"
A1013	A	32					10	29'-10"							"
A1015	A	16					10	27'-4"							Column
A1016	A	16					10	25'-1"							"
A1017	A				16		10	30'-10"							"
A1018	A				16		10	30'-1"							"
A1019	A				16		10	29'-4"							"
A1020	A				16		10	29'-1"							"
A1021	A				16		10	27'-7"							"
A1022	A				16		10	27'-1"							"
A1023	A				16		10	26'-4"							"
A1024	A					16	10	28'-7"							"
A1025	A					16	10	28'-1"							"
A1026	A					16	10	27'-4"							"
A1027	A					16	10	26'-10"							"
A1028	A					16	10	24'-7"							"
A1029	A					16	10	23'-10"							"
A1030	A					16	10	23'-1"							"
A1031	A	4	4		4	4	10	19'-4"							Cap
A1032	A	8	8	8	8	8	10	22'-7"							"
A1033	A	8	8		8	8	10	12'-0"							"
A1034	A	4	4		4	4	10	23'-3"							"
A1035	A			8			10	11'-4"							"
A1041	A		16				10	36'-4"							Column
A1042	A		16				10	28'-4"							"
A1043	A		16				10	27'-10"							"
A1044	A		32				10	27'-4"							"
A1045	A		16				10	26'-7"							"
A1046	A		16				10	26'-1"							"

PIERS

MARK	BAR	NUMBER Pier 1	Pier 2	Pier 3	Pier 4	Pier 5	SIZE	LENGTH	BENDING DIMENSIONS a	b	c	d	e	f	LOCATION
A1110	A		24				11	29'-4"							Column
A1111	A		24				11	25'-7"							"
A1112	A		24				11	28'-1"							"
A1113	A		48				11	27'-1"							"
A1114	A		24				11	26'-10"							"
A1115	A		24				11	26'-4"							"
B910	B	8					9	33'-6"	32'-3"						Cap
B911	B	12	4		12	12	9	12'-9"	11'-6"						"
B912	B				8		9	36'-0"	34'-9"						"
B913	B	8			8	8	9	13'-6"	12'-3"						"
B914	B					8	9	36'-9"	35'-6"						"
B915	B	4	4		4	4	9	12'-0"	10'-9"						"
B916	B			8			9	35'-2"	33'-11"						"
B917	B			6			9	12'-4"	11'-1"						"
B918	B			6			9	13'-1"	11'-10"						"
B919	B			8			9	19'-0"	17'-9"						"
B920	B			8			9	13'-10"	12'-7"						"
B921	B			8			9	13'-1"	11'-10"						"
B922	B		8				9	34'-3"	33'-0"						"
B923	B		8				9	12'-1"	10'-10"						"
B924	B		8				9	12'-10"	11'-7"						"
B1010	B	8	8		8	8	10	19'-4"	17'-11"						Cap
B1011	B	4	4		4	4	10	14'-2"	12'-9"						"
B1012	B	4	4		4	4	10	13'-5"	12'-0"						"
C1010	C	112	112		112	112	10	6'-8"	6'-0"	8"					Footing
C1110	C			168			11	7'-1"	6'-4"	9"					Footing
D520	D	63	9		63	63	5	6'-10"	5'-8"						Footing
D521	D			105			5	10'-10"	9'-8"						"
D522	D			20			5	7'-10"	6'-8"						"
D523	D		108					9'-10"	8'-8"						"
D620	D	84	12		84	84	6	9'-0"	7'-8"						Footing
D621	D		108				6	10'-0"	8'-8"						"
D720	D			168			7	11'-4"	9'-8"						Footing
L520	L	4	4	4	4	4	5	6'-9"	2'-2"	4'-7"	4½"	1'-0"			Cap
L521	L	4	1	4	4	4	5	7'-4"	2'-7"	4'-9"	4'-8"	1'-0"			"
							4								
N420	N	192	182		181	163	4	11'-8"	2'-8"	2'-8"	1'-6"				Column
N421	N			384			4	10'-10"	2'-0"	2'-11"	1'-6"				"
N520	N	14	14		14	14	5	9'-5" to 10'-11" (2 Ea. V.B. 3')	10½"	2'-10½"	1'-0"				Cap
N521	N	198	182		198	198	5	11'-3"	11½"	3'-2"	1'-0"				"
N522	N	29	27		29	29	5	12'-8"	2'-8"	3'-2"	1'-0"				"
N523	N	20	20		20	20	5	9'-7" to 11'-1" (2 Ea. V.B. 2')	1'-1½"	2'-4½"	1'-0"				"
N524	N			4			5	9'-10" to 11'-4" (2 Ea. V.B. 3')	2'-1"	2'-6½"	1'-0"				"
N525	N			174			5	11'-5"	2'-0½"	3'-2"	1'-0"				"
N526	N			28			5	13'-2"	2'-11"	3'-2"	1'-0"				"
N527	N			20			5	9'-10" to 11'-4" (2 Ea. V.B. 2')	2'-1"	2'-6½"	1'-0"				"

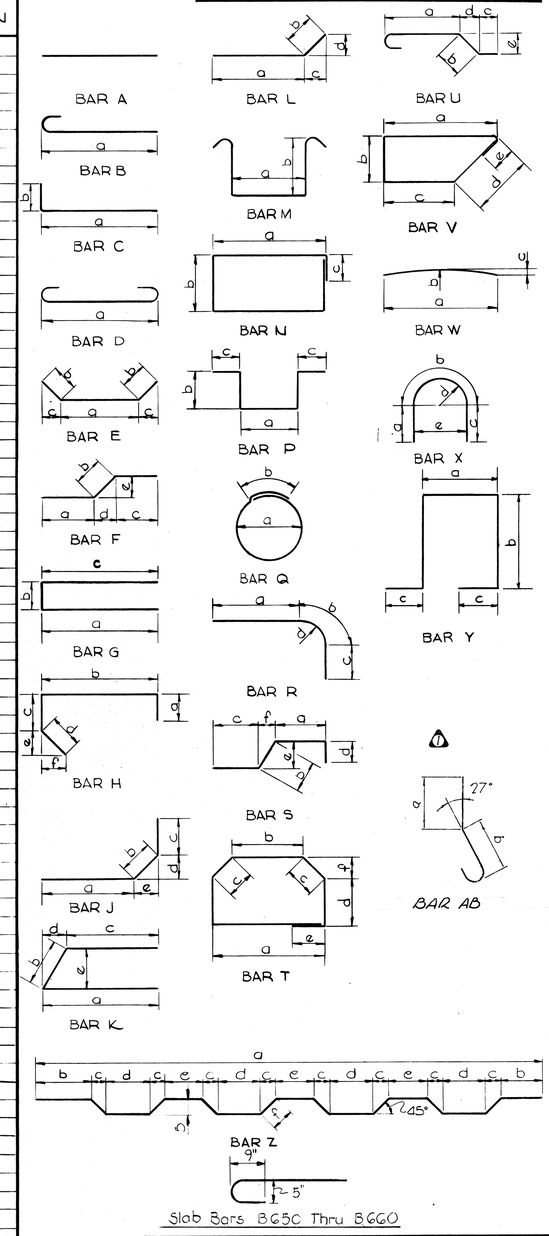

Slab Bars B650 Thru B660

1 8-2-71 CEC Added Reinf. Conc. Med. Barrier

NOTES:

1. Reinforcing steel detailed as per Manual of Standard Practice for Reinforced Concrete Structures A.C.I.
2. Standard Hooks as recommended by C.R.S.I. shall apply unless otherwise noted.
3. Bar dimensions are out to out.

DESIGNED BY	A.P.S.	DATE	AUG. 68
DRAWN BY	D.L.S.	DATE	AUG. 68
TRACED BY	D.L.S.	DATE	AUG. 68
CHECKED BY	D.S.	DATE	SEPT. 68

STATE OF TENNESSEE
DEPARTMENT OF HIGHWAYS
NASHVILLE

STRUCTURE NO. 22 AT STA. 484+48.55 I-40
I-40 OVER L & N R.R. & CLINTON ST.
DAVIDSON COUNTY
REINFORCING STEEL SCHEDULE

KNOERLE, BENDER, STONE & ASSOCIATES, INC.
NASHVILLE, TENN. BALTIMORE, MD.

CORRECT _____ BRIDGE ENGINEER
APPROVED _____ STATE HIGHWAY ENGINEER

K-20-28

MICROFILMED

FED. ROAD DIST. NO.	STATE	FED. AID PROJ. NO.	FISCAL YEAR	SHEET NO.	TOTAL SHEETS
3	TENN.	I-40-4(20)208	1968	117	360

1 6-2-69 D.W.F. Quantity Notes.
REVISION 2 11-4-69 E.R.G. Bridgerail Post Spacing.
3 3-3-70 D.P.H. Insert note.
4 8-2-71 C.E.C. Revised Quantity Block for Reinf. Conc. Med. Barrier

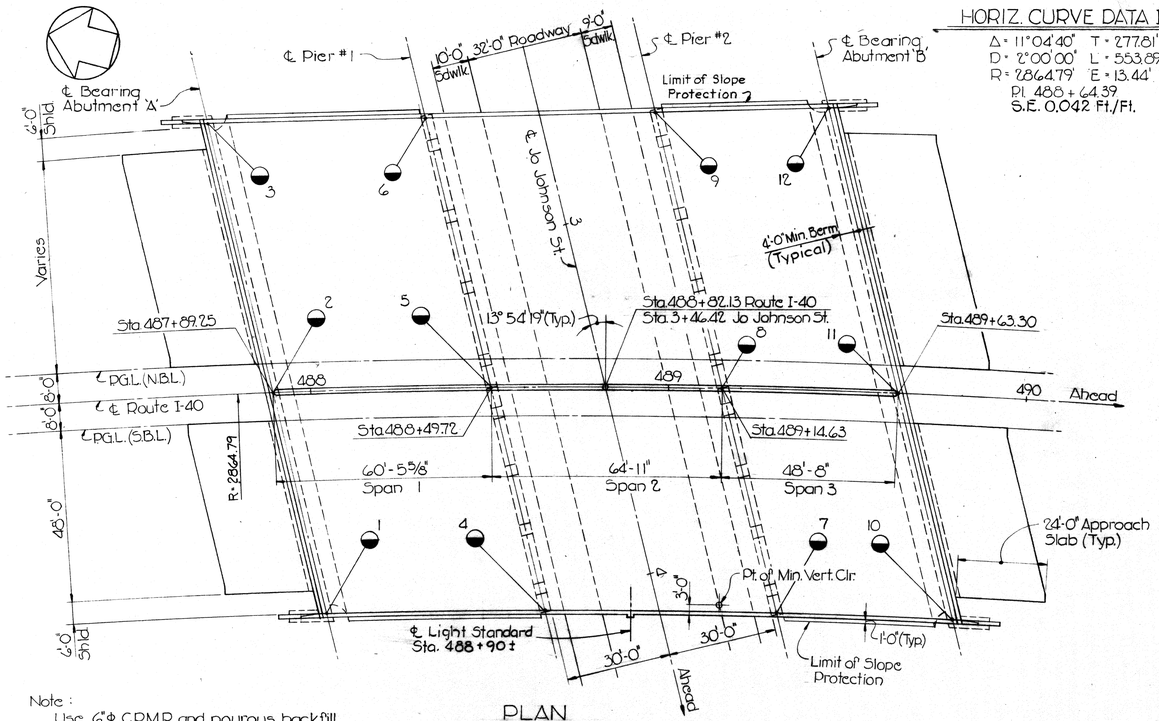

Note:
Use 6"Φ C.P.M.P and pourous backfill behind each abutment. For detail see drawing K-80-3

PLAN
Scale: 1" = 20'-0"

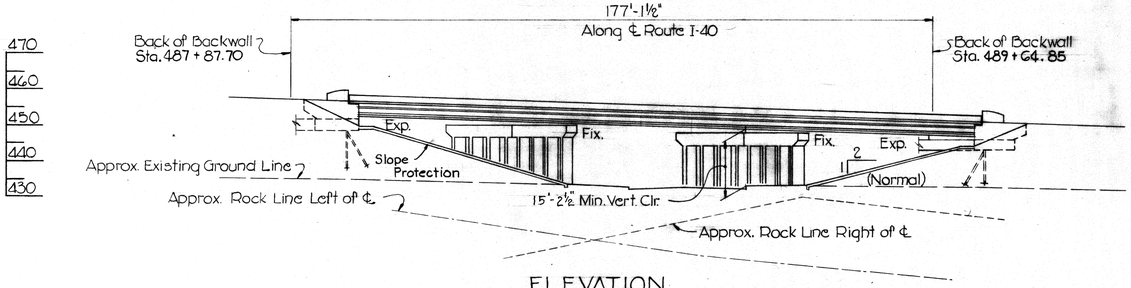

ELEVATION
Scale: 1" = 20'-0"

HORIZ. CURVE DATA I-40

Δ = 11°04'40" T = 277.81'
D = 2°00'00" L = 553.89'
R = 2864.79' E = 13.44'
P.I. 488 + 64.39
S.E. 0.042 Ft./Ft.

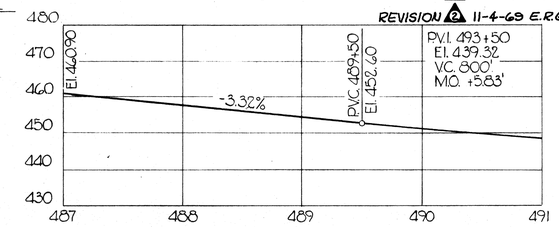

ROUTE I-40

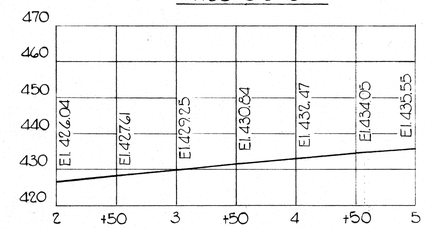

JO JOHNSON STREET

PROFILE GRADE LINES

Scales: Horiz. 1" = 60'-0"
Vert. 1" = 20'-0"

INDEX OF DRAWINGS

Sheet Nos.	Titles
K-80-29	General Plan & Elevation
K-80-30	Abutment 'A'
K-80-31	Abutment 'B'
K-80-32	Pier 1
K-80-33	Pier 2
K-80-34	Framing Plan
K-80-35	Slab Plan S.B.L.
K-80-36	Slab Plan N.B.L.
K-80-37	Prestressed Beam Details
K-80-38	Reinforcing Steel Schedule
K-80-3	Standard Abutment and Retaining Wall Details
K-80-4	Light Standard Base Details
K-38-154	Bridge Railing
K-56-34	Steel Pile Splice Details

GENERAL NOTES

SPECIFICATIONS:
General - Tennessee Department of Highways, "Road and Bridge Specifications 1951 Edition and the Supplemental Specifications and Special Provisions.
Design - AASHO "Standard Specifications for Highway Bridges, 1965 Edition" with Addenda.
Capacity - HS 20-44 Loading and the B.P.R. modified loading for military vehicles.

CONCRETE:
All cast-in-place concrete shall be Class 'A'. Chamfer all exposed edges of concrete 1"x1" unless otherwise shown or noted.

REINFORCEMENT:
All reinforcing steel shall be A.S.T.M. A615.
All reinforcing bar dimensions on the detail drawings are to center line of bar except where the clear distance is noted from face of concrete.

JOINT SEALER:
See Special Provisions, Type II Class 'A' or 'B'

NEOPRENE BEARING PADS:
See Special Provisions

PILES:
All piles shall be 10BP42 and driven to refusal or a minimum bearing of 55 tons @ Abutments

FOUNDATIONS:
The foundations of abutments shall be on piles.
The footings of piers shall rest on rock.
When foundations for piers have been uncovered, holes 6 feet shall be drilled into the rock at points designated by the Engineer. From the results obtained, the Engineer shall determine the final footing elevation. No reinforcing steel for bent columns shall be ordered until final footing elevations are determined.

BRIDGE RAILING:
Build bridge railing according to Standard Drawing K-38-154.
Left Parapet dimension X = 1'-1⅞", N = 17 Spaces @ L = 10'-1½" 2
Right Parapet dimension X = 1'-4⅛", N = 17 Spaces @ L = 10'-2

FILLS:
Fills at ends of bridge to be in place and thoroughly compacted before abutment piles are driven.

LIGHTING:
For details of Light Standards and Conduits, see sheet 84 and Standard Drawing K-80-4.

● Denotes Boring Location
(Boring Locations are Approximate)
*** These Borings are Inaccessable.

Boring No.	Station	Location	Ground Elevation	Rock Elevation
1	488+00	62' Rt.	433.47	***
2	487+89	℄	431.69	***
3	487+77	76' Lt.	***	***
4	488+62	64' Rt.	432.77	415.77
5	488+50	℄	431.57	422.57
6	488+35	75' Lt.	428.49	423.49
7	489+30	64' Rt.	433.47	429.97
8	489+15	℄	429.77	425.77
9	489+00	76' Lt.	427.09	414.09
10	489+78	62' Rt.	430.69	424.67
11	489+64	℄	428.79	423.79
12	489+46	78' Lt.	423.39	409.39

ESTIMATED QUANTITIES

	Excavation Dry C.Y.	Excavation Rock C.Y.	Concrete Class 'A' C.Y.	Reinforcing Steel Lbs.	Type II Prestressed Beams 60'-10" Span 1	Type II Prestressed Beams 64'-2"± Span 2	Type II Prestressed Beams 48'-6"± Span 3	Bearing Piles 10BP42 L.F.	Bridge Railing L.F.	Linseed Oil Treatment* S.Y.	Rock Drilling L.F.	Structure Lighting L.S.	Reinf. Conc. Med. Barrier L.F.
Superstructure			640.0	199,330	20	20	20		350	2880			177
Abutment 'A'			40.8	5,240				730					
Pier 1	320	20	153.5	28,820							48		
Pier 2	190	40	143.0	26,040							48		
Abutment 'B'			42.0	5,420				750					
Total	510	60	1019.3	264,850	20	20	20	1480	350	2880	96	Lump Sum	177

* Special Provision on Linseed Oil Treatment does not apply to Bent Caps.
Cost of all Joint Material to be included in items bid on.
Cost of 6"Φ C.P.M.P and porous backfill material to be included in price of item bid on.
Excavation based on lower road profile.
Lighting Lump Sum is for complete installation of all structural lighting as shown on plan.
3 1 The cost of 16 threaded steel inserts and 16 - ⅞"Φ x 4" hex head bolts, (A307), to be included in bridge items bid on.

ROADWAY
Roadway varies. 137'-9" to 140'-11"±

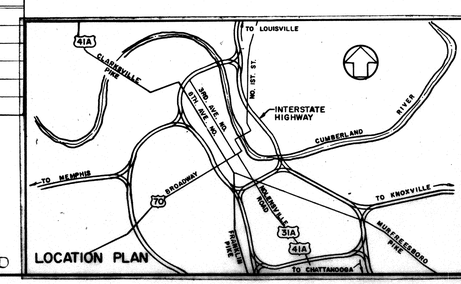

STATE OF TENNESSEE
DEPARTMENT OF HIGHWAYS
NASHVILLE

STRUCTURE NO. 23 AT STA. 488+82.13 I-40
I-40 OVER JO JOHNSON ST.
DAVIDSON COUNTY
GENERAL PLAN AND ELEVATION

KNOERLE, BENDER, STONE & ASSOCIATES, INC.
NASHVILLE, TENN. BALTIMORE, MD.

CORRECT _____ BRIDGE ENGINEER
APPROVED _____ STATE HIGHWAY ENGINEER

K-80-29

DESIGNED BY	A.P.S.	DATE	APRIL, 68
DRAWN BY	W.O.D.	DATE	APRIL, 68
TRACED BY	N.M.S.	DATE	MAY, 68
CHECKED BY	J.S.P.	DATE	OCT. 68

SCALE: AS NOTED

MICROFILMED

FED. ROAD DIST. NO.	STATE	FED. AID PROJ. NO.	FISCAL YEAR	SHEET NO.	TOTAL SHEETS
3	TENN.	I-40-4(20)208	1968	118	360

1 6-2-69 D.W.F. Guardrail Attachment & Wingpost Dimensions.
2 3-2-70 D.P.H. Guardrail & Wingpost Details.

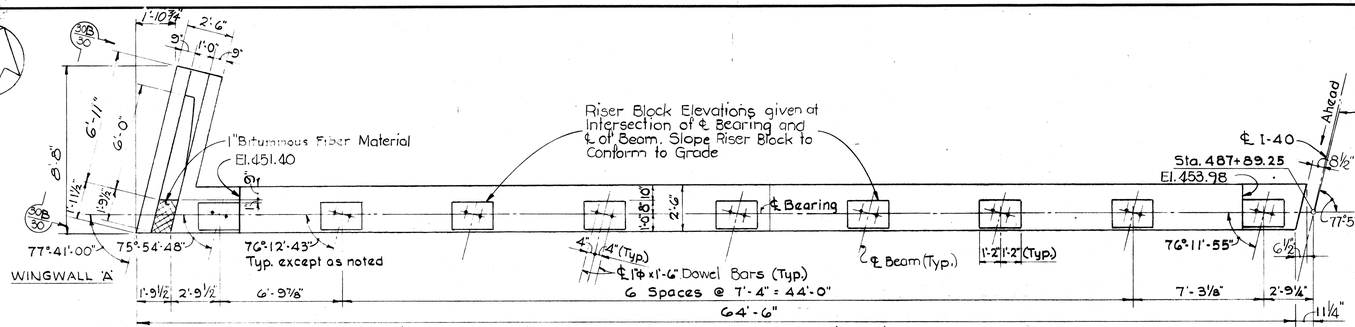

1 PART PLAN (S.B.L.)
Scale: 1/4" = 1'-0"

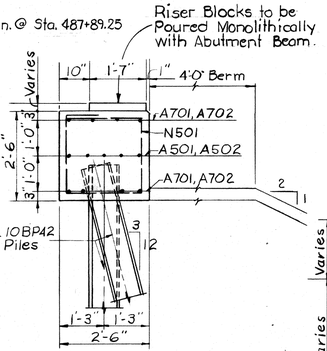

SECTION 30 A
Scale: 1/4" = 1'-0"

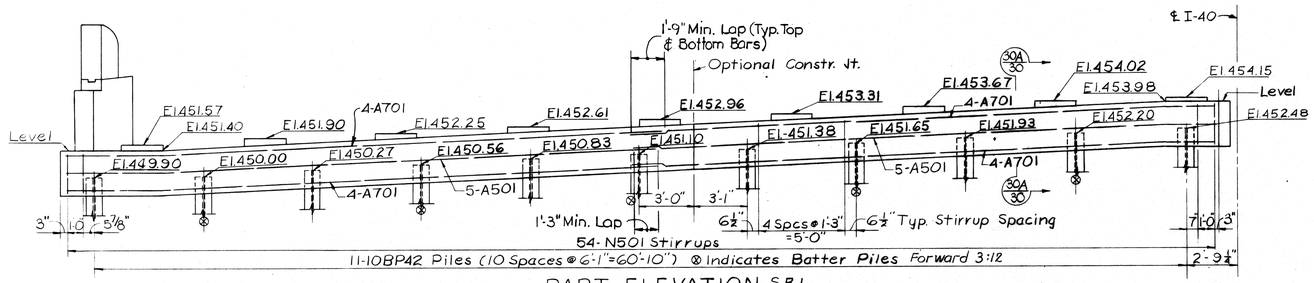

PART ELEVATION S.B.L.
Scale: 1/4" = 1'-0"

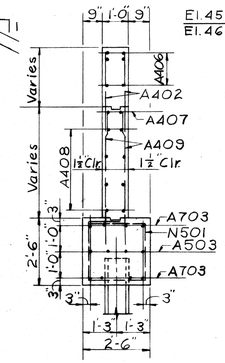

SECTION 30C
Scale: 1/8" = 1'-0"

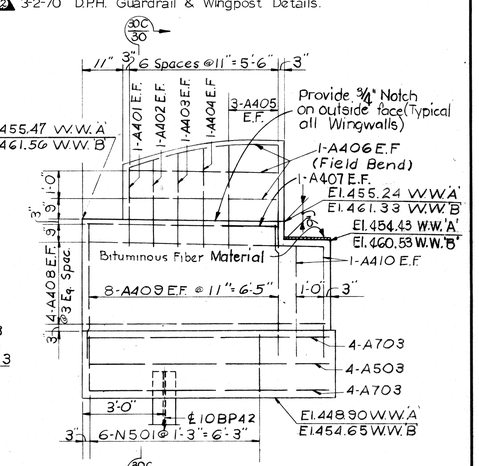

1 VIEW 30B
WINGWALL 'B' SIMILAR
Scale: 3/8" = 1'-0"

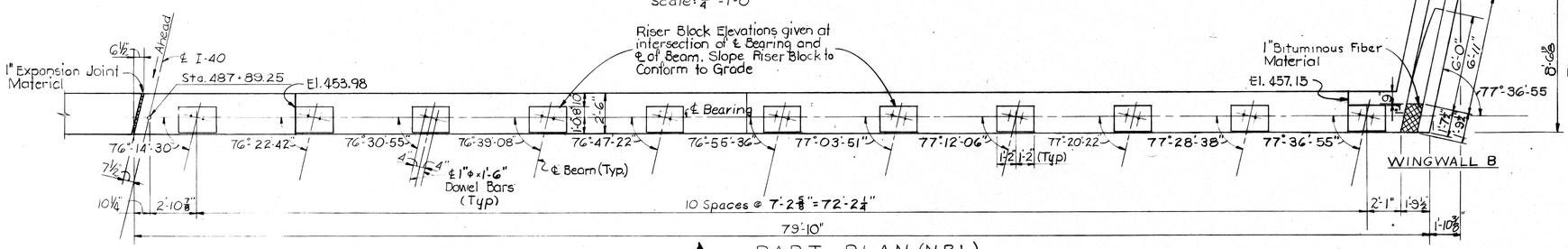

1 PART PLAN (N.B.L.)
Scale: 1/4" = 1'-0"

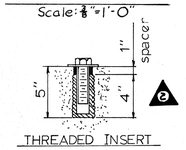

THREADED INSERT

Note: Spacer, insert & bolt to be cast in place.

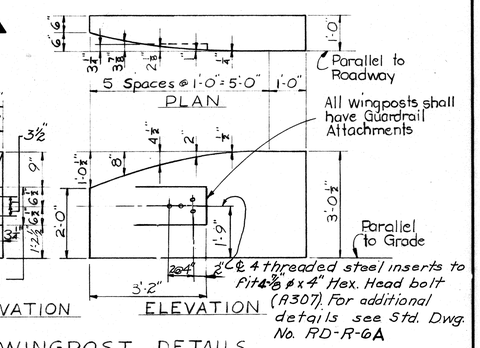

2 1 WINGPOST DETAILS
Scale: 1/2" = 1'-0"

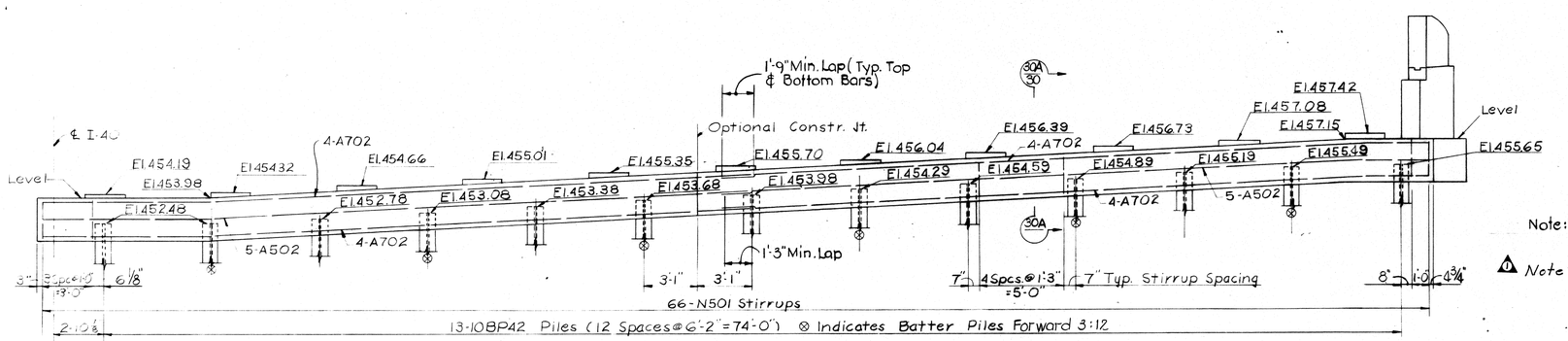

PART ELEVATION (N.B.L.)
Scale: 1/4" = 1'-0"

* Includes Wingpost Quantities

* ESTIMATED QUANTITIES	
Concrete Class 'A' C.Y.	Reinforcing Steel Lbs.
40.8	5,240

Note: See Drawing K-80-31 for Abutment Notes.

1 Note: Threaded inserts to be set by Bridge Contractor.

Scale: As Noted

STATE OF TENNESSEE
DEPARTMENT OF HIGHWAYS
NASHVILLE

STRUCTURE NO. 23 AT STA. 488+82.13 I-40
I-40 OVER JO JOHNSON ST.
DAVIDSON COUNTY
ABUTMENT 'A'

KNOERLE, BENDER, STONE & ASSOCIATES, INC.
NASHVILLE, TENN. BALTIMORE, MD.

CORRECT _____ BRIDGE ENGINEER
APPROVED _____ STATE HIGHWAY ENGINEER

K-80-30

DESIGNED BY	A.D.S.	DATE	MAY, 68
DRAWN BY	W.O.D.	DATE	JUNE, 68
TRACED BY	J.C.R.	DATE	JUNE, 68
CHECKED BY	J.S.S.	DATE	OCT. 68

FED. ROAD DIST. NO.	STATE	FED. AID PROJ. NO.	FISCAL YEAR	SHEET NO.	TOTAL SHEETS
3	TENN.	I40-4(20)208	1968	119	360

1 6-2-69 D.W.F. Guardrail Attachment & Wingwall Dimensions.

2 3-3-70 D.P.H. Removed insert note.

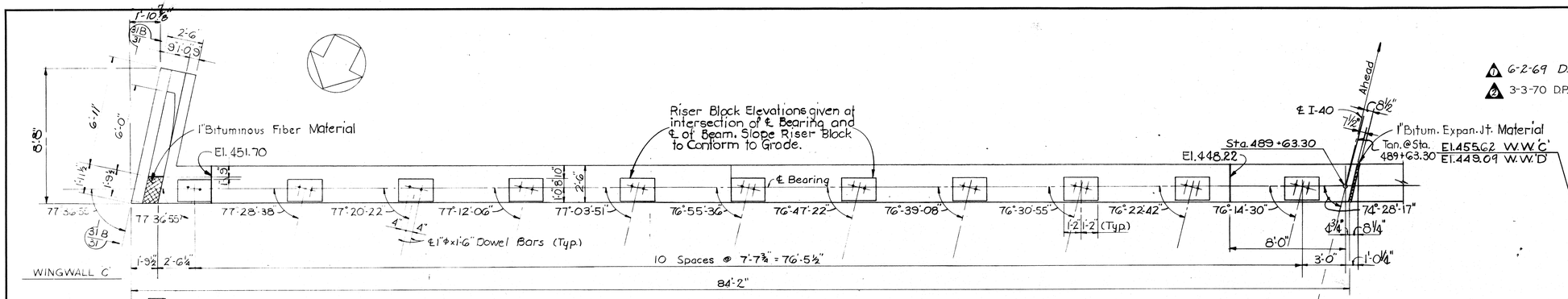

1 PART PLAN (N.B.L.)

Scale: ¼" = 1'-0"

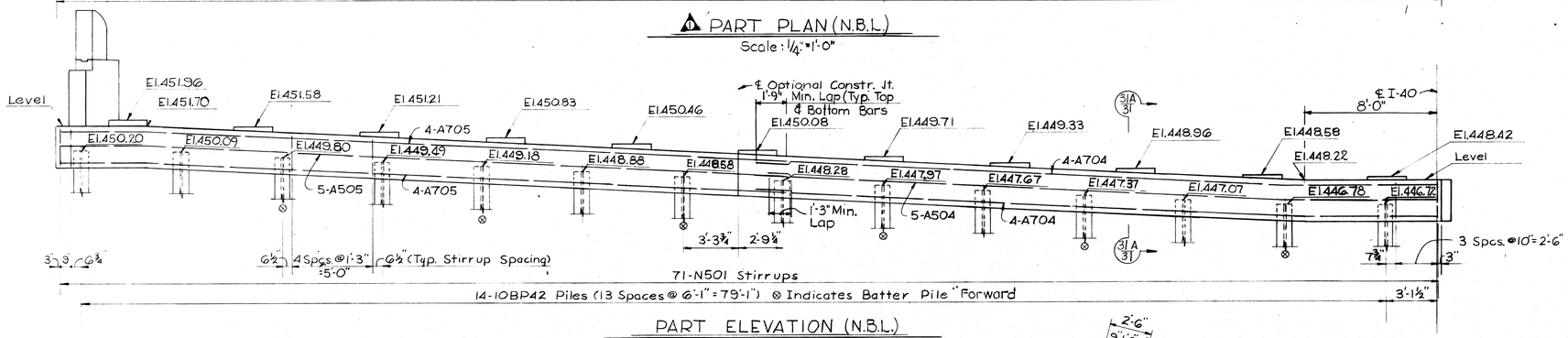

PART ELEVATION (N.B.L.)

Scale: ¼" = 1'-0"

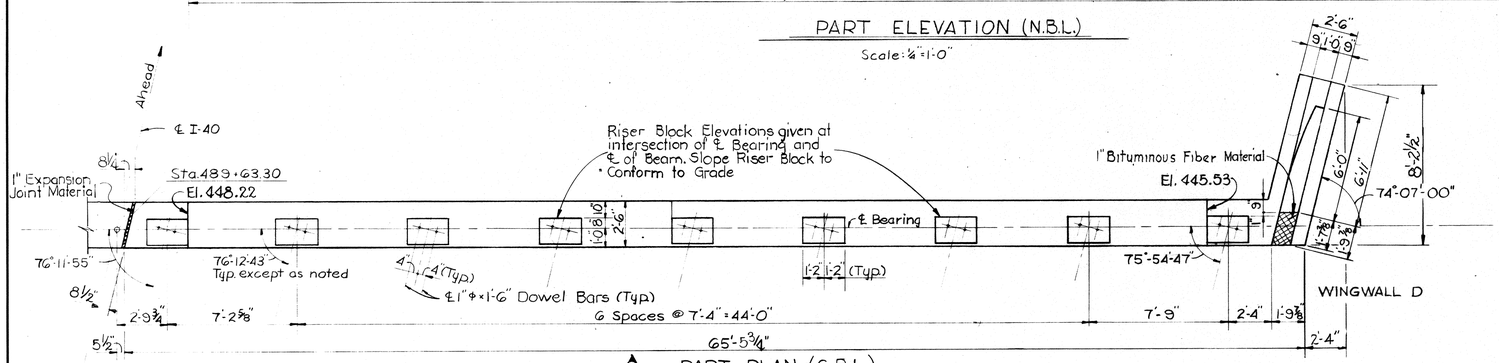

1 PART PLAN (S.B.L.)

Scale: ¼" = 1'-0"

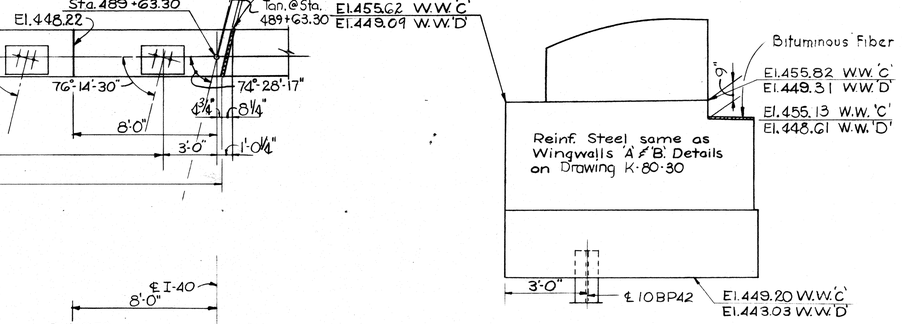

VIEW 31 B

WINGWALL 'D' SIMILAR

Scale: ⅜" = 1'-0"

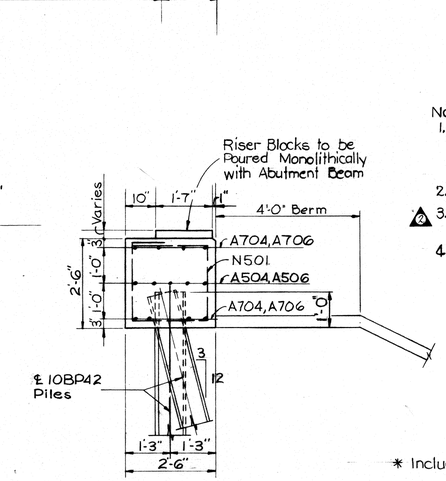

SECTION 31 A

Scale: ½" = 1'-0"

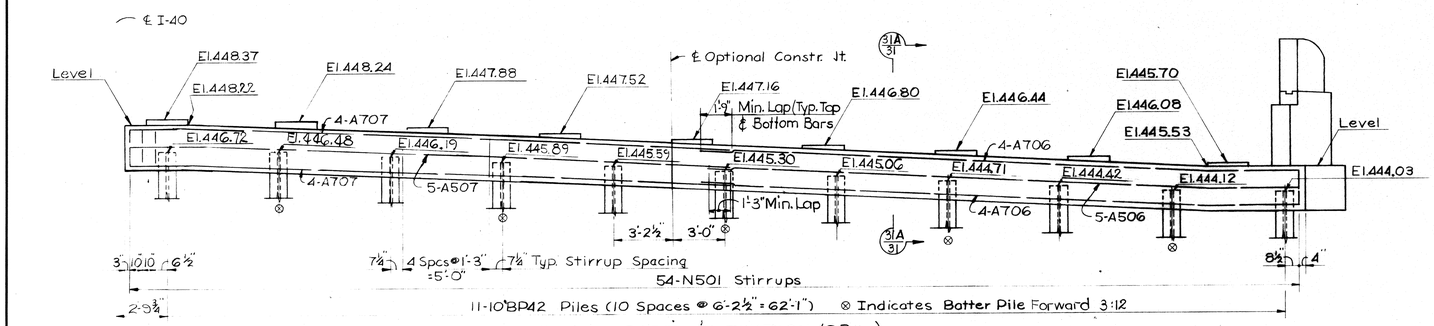

PART ELEVATION (S.B.L.)

Scale: ¼" = 1'-0"

Notes

1. When pouring abutment beam, provisions shall be made for setting dowel bars. If the Contractor elects to drill the holes for the dowel bars, the reinforcing steel shall be placed so as not to interfere with the drilling. Dowel bar projection = 3¾".
2. For details of Neoprene Bearing Pads see Drawing K-80-37.
3. For guardrail attachment to wingpost see details on Drawing K-80-30 and Tennessee Standard Drawing RD-R-6A. (2)
4. For details of 6"φ C.P.M.P. and porous backfill see Drawing K-80-3.

1 2

* Includes Wingpost Quantities

ESTIMATED QUANTITIES	
Concrete Class A C.Y.	Reinforcing Steel Lbs.
42.0	5,420

DESIGNED BY	JSB	DATE	MAY, 68
DRAWN BY	V. JD	DATE	JUNE, 68
TRACED BY	JSB	DATE	JUNE 68
CHECKED BY	JSB	DATE	OCT 68

STATE OF TENNESSEE
DEPARTMENT OF HIGHWAYS
NASHVILLE

STRUCTURE NO. 23 AT STA. 488+82.13 I-40
I-40 OVER JO JOHNSON ST.
DAVIDSON COUNTY
ABUTMENT 'B'

KNOERLE, BENDER, STONE & ASSOCIATES, INC.
NASHVILLE, TENN. BALTIMORE, MD.

CORRECT _____ BRIDGE ENGINEER
APPROVED _____ STATE HIGHWAY ENGINEER

K-80-31

Scale: As Noted

MICROFILMED

FED. ROAD DIST. NO.	STATE	FED. AID PROJ. NO.	FISCAL YEAR	SHEET NO.	TOTAL SHEETS
3	TENN.	I-40-4(20)208	1968	120	360

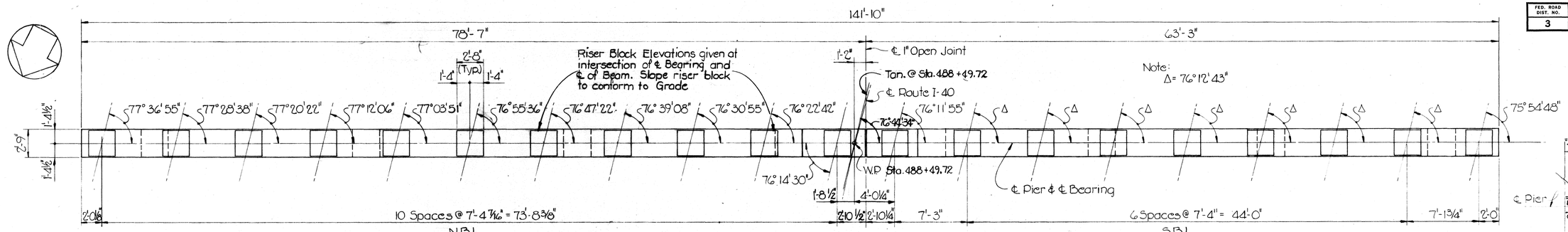

PLAN

Scale: 3/16" = 1'-0"

Notes:

1. Reinforcing steel to extend a minimum of 2'-4" into cap beam and shall not be ordered until final footing elevations have been determined.
2. When pouring cap beam, provisions shall be made for setting dowel bars. If the Contractor elects to drill the holes for the dowel bars, the reinforcing steel shall be placed so as not to interfere with the drilling. Dowel bar projection = 7". See typical bearing detail this drawing.
3. Riser blocks to be poured monolithically with cap beam.
4. Bottom of footings to be a minimum of 6" into solid rock.

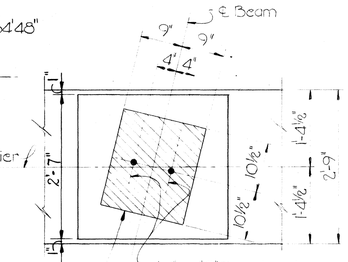

Note:
Top of dowels to be covered with 1/2" of compressible material and projection wrapped with two layers of waterproof paper.

TYPICAL BEARING DETAIL

Scale: 3/4" = 1'-0"

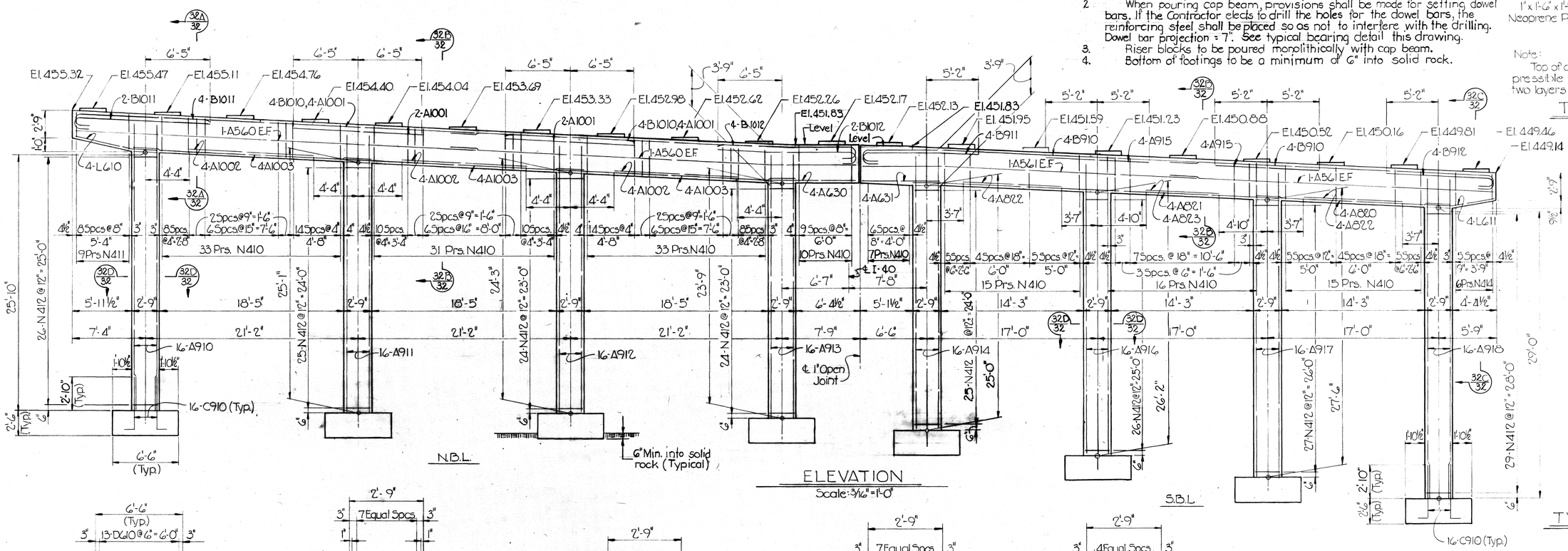

ELEVATION

Scale: 3/16" = 1'-0"

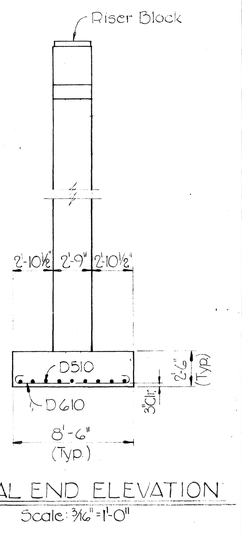

TYPICAL END ELEVATION

Scale: 3/16" = 1'-0"

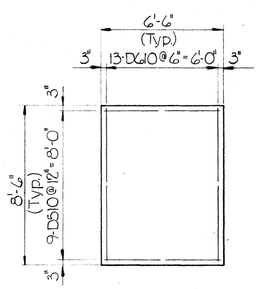

TYPICAL FOOTING PLAN

Scale: 1/4" = 1'-0"

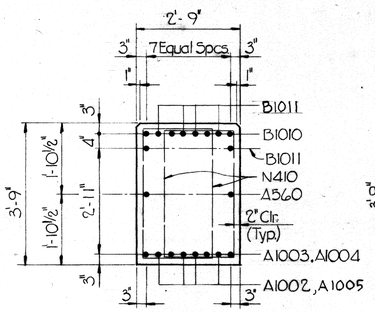

SECTION 32 A

Scale: 1/2" = 1'-0"

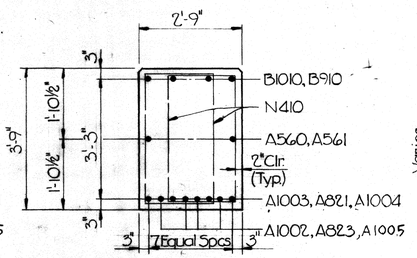

SECTION 32 B

Scale: 1/2" = 1'-0"

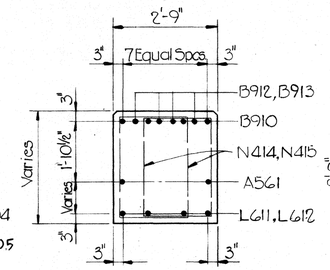

SECTION 32 C

Scale: 1/2" = 1'-0"

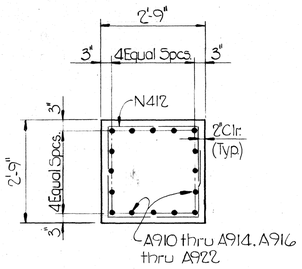

SECTION 32 D

Scale: 1/2" = 1'-0"

ESTIMATED QUANTITIES

Concrete Class A C.Y.	Reinforcing Steel Lbs.
153.5	28,820

STATE OF TENNESSEE
DEPARTMENT OF HIGHWAYS
NASHVILLE

STRUCTURE NO. 23 AT STA. 488+82.13 I-40
I-40 OVER JO JOHNSON ST.
DAVIDSON COUNTY
PIER 1

KNOERLE, BENDER, STONE & ASSOCIATES, INC.
NASHVILLE, TENN. BALTIMORE, MD.

CORRECT _____ BRIDGE ENGINEER
APPROVED _____ STATE HIGHWAY ENGINEER

K-80-32

Scale: As Noted

DESIGNED BY	A.P.S.	DATE	MAY. 68
DRAWN BY	N.M.S.	DATE	MAY. 68
TRACED BY	N.M.S.	DATE	MAY. 68
CHECKED BY	J.S.P.	DATE	OCT. 68

FED. ROAD DIST. NO.	STATE	FED. AID PROJ. NO.	FISCAL YEAR	SHEET NO.	TOTAL SHEETS
3	TENN.	I-40-4(20)208	1968	121	360

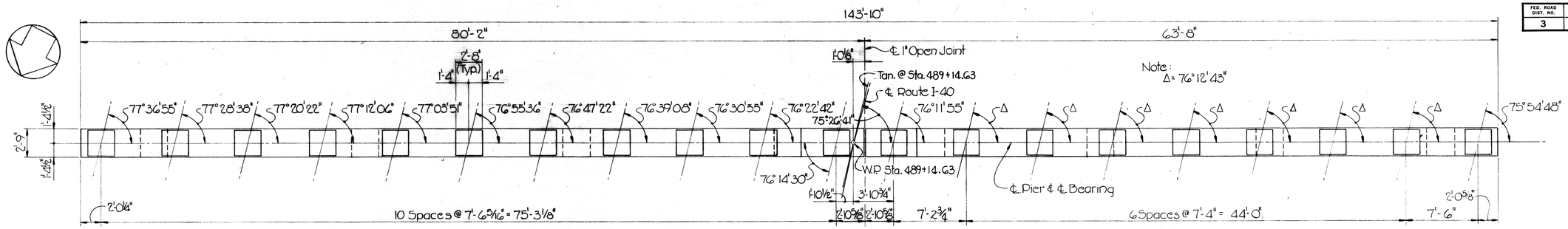

PLAN
Scale: 3/16" = 1'-0"

Notes:
1. Reinforcing steel to extend a minimum of 2'-4" into beam cap and shall not be ordered until final footing elevations have been determined.
2. When pouring cap beam, provisions shall be made for setting dowel bars. If the Contractor elects to drill the holes for the dowel bars, the reinforcing steel shall be placed so as not to interfere with the drilling. Dowel bar projection = 7. See typical bearing detail Drawing K-80-32.
3. Riser blocks to be poured monolithically with cap beam.
4. Bottom of footings to be a minimum of 6" into solid rock.

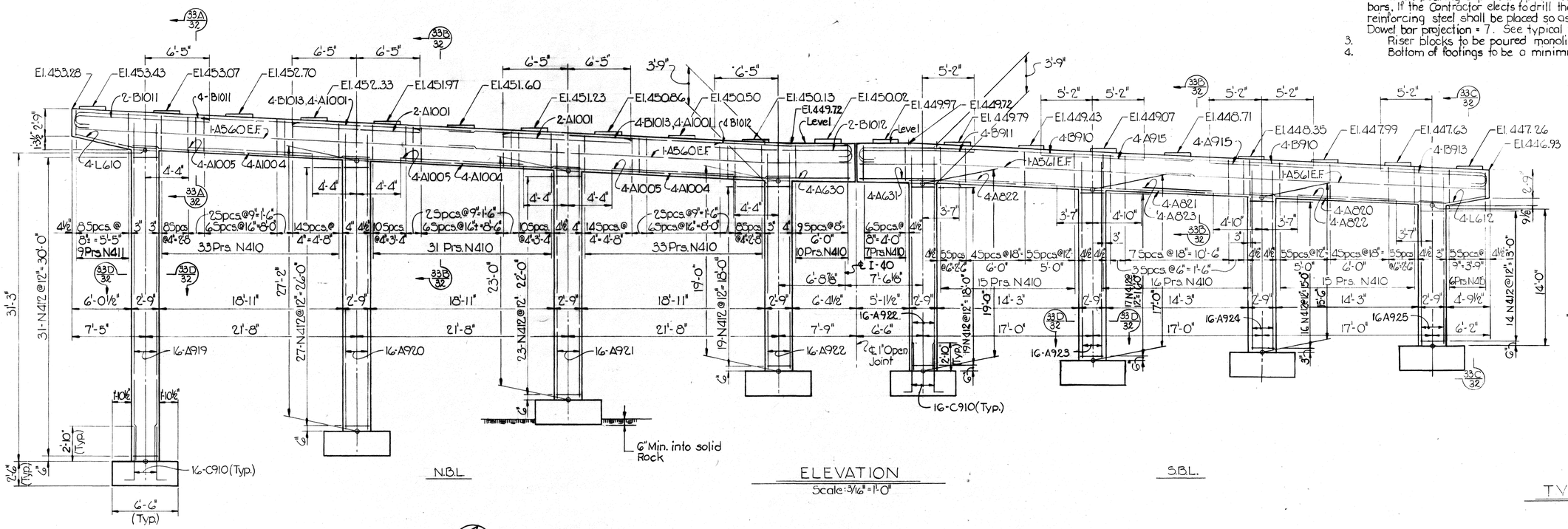

ELEVATION
Scale: 3/16" = 1'-0"

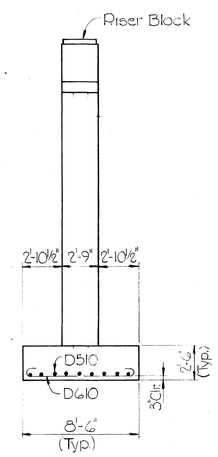

TYPICAL END ELEVATION
Scale: 3/16" = 1'-0"

Note: For footing reinforcing see Typical Footing Plan Drawing K-80-32

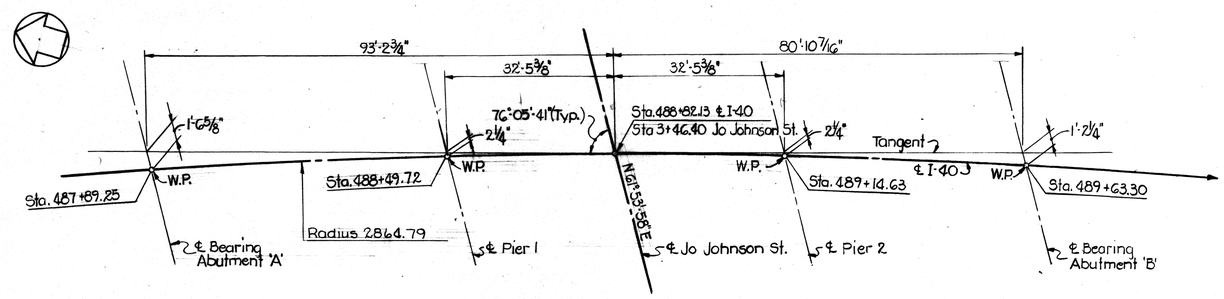

GEOMETRY LAYOUT
No Scale

ESTIMATED QUANTITIES	
Concrete Class 'A' C.Y.	Reinforcing Steel Lbs.
143.0	26,040

STATE OF TENNESSEE
DEPARTMENT OF HIGHWAYS
NASHVILLE

STRUCTURE NO. 23 AT STA. 488+82.13 I-40
I-40 OVER JO JOHNSON ST.
DAVIDSON COUNTY
PIER 2

KNOERLE, BENDER, STONE & ASSOCIATES, INC.
NASHVILLE, TENN. BALTIMORE, MD.

CORRECT _____ BRIDGE ENGINEER
APPROVED _____ STATE HIGHWAY ENGINEER

K-80-33

DESIGNED BY	A.P.S.	DATE	MAY, 68
DRAWN BY	N.M.S.	DATE	JUNE, 68
TRACED BY	N.M.S.	DATE	JUNE, 68
CHECKED BY	J.S.P.	DATE	OCT. 68

Scale: As Noted

MICROFILMED

FED ROAD DIST NO	STATE	FED AID PROJ NO	FISCAL YEAR	SHEET NO	TOTAL SHEETS
3	TENN	I-40-4(20)208	1968	122	360

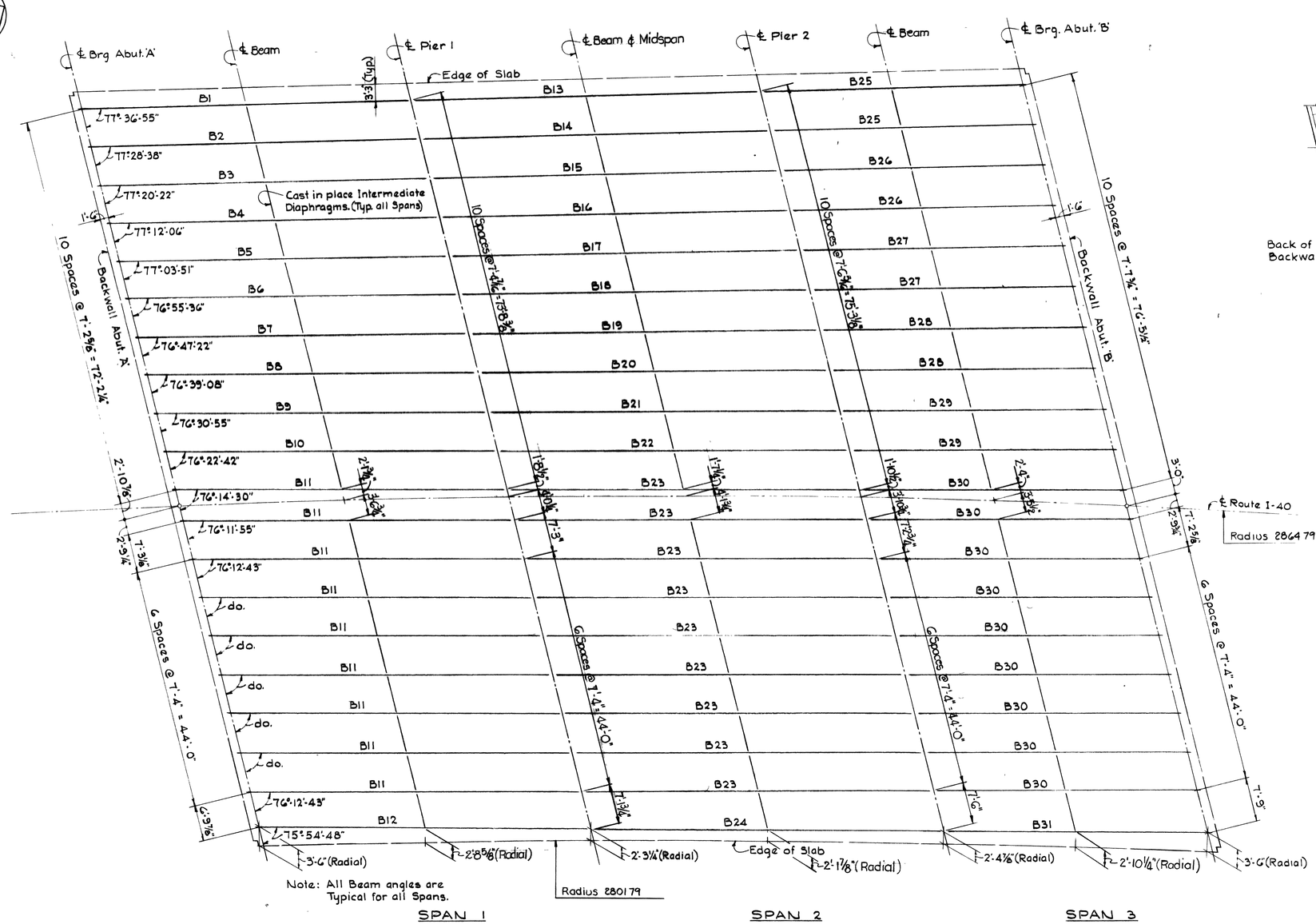

FRAMING PLAN

Scale: 3/32" = 1'-0"

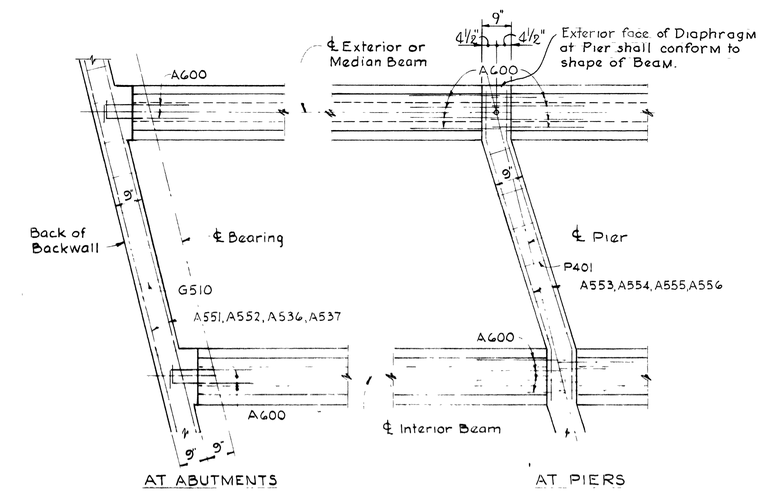

TYPICAL BEAM - DIAPHRAGMS PLAN

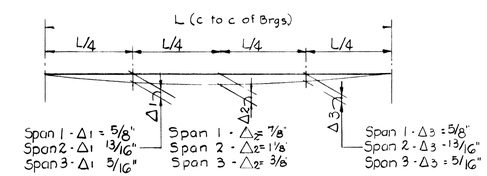

DEAD LOAD DEFLECTION DUE TO SLAB

Not to Scale

DESIGNED BY	APS	DATE	MAY, 68
DRAWN BY	WOD	DATE	JUNE, 68
TRACED BY	WOD	DATE	JUNE, 68
CHECKED BY	JSP	DATE	OCT. 68

Scale: As Noted

STATE OF TENNESSEE
DEPARTMENT OF HIGHWAYS
NASHVILLE

STRUCTURE NO. 23 AT STA. 488+82.13 I-40
I-40 OVER JC JOHNSON ST
DAVIDSON COUNTY
FRAMING PLAN

KNOERLE, BENDER, STONE & ASSOCIATES, INC.
NASHVILLE, TENN. BALTIMORE, MD.

CORRECT _____ BRIDGE ENGINEER
APPROVED _____ STATE HIGHWAY ENGINEER

K-80-34

MICROFILMED

FED ROAD DIST NO	STATE	FED AID PROJ NO	FISCAL YEAR	SHEET NO	TOTAL SHEETS
3	TENN	I-40-4(20)208	1968	123	360

△1 8-2-71 CFC Revised Median Barrier Details

Note A
See Joint Details at Abutments
Drawing K-80-36

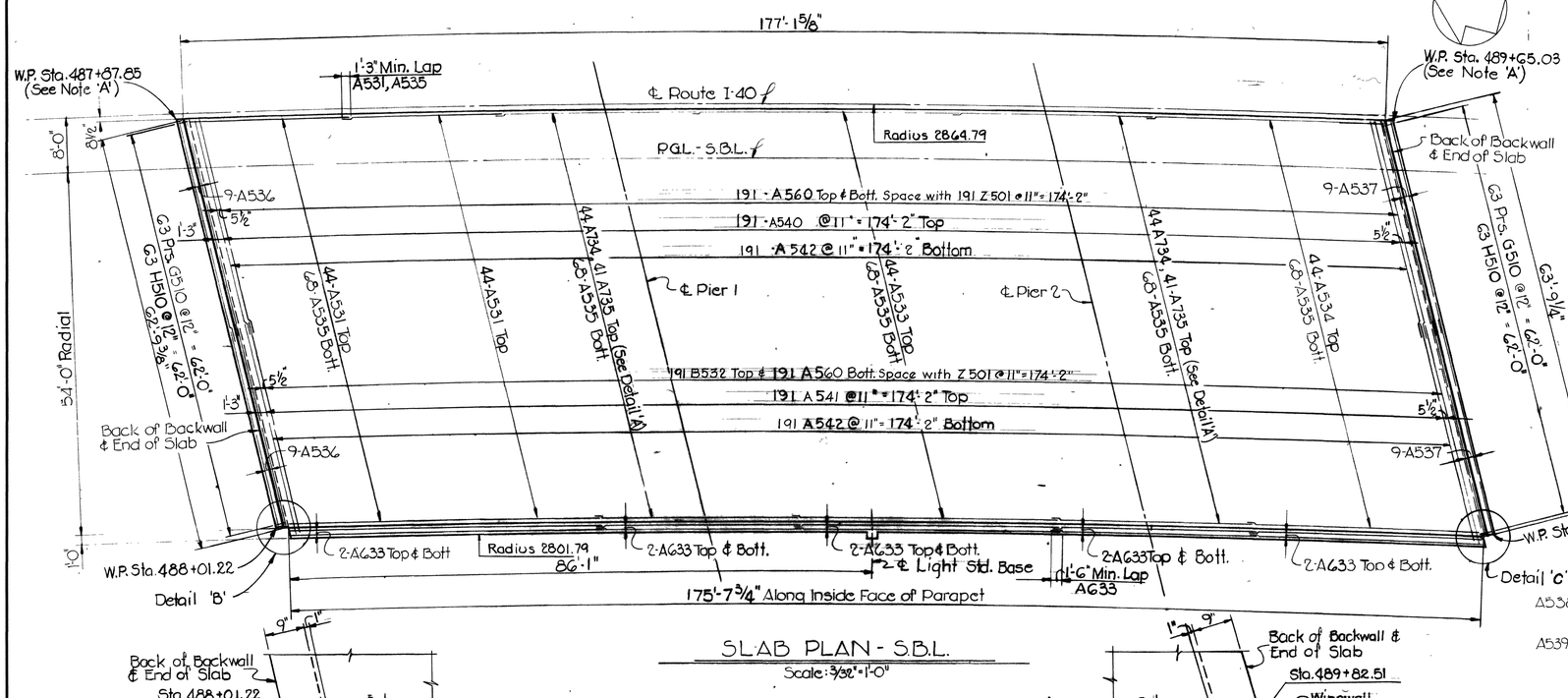

SLAB PLAN - S.B.L.
Scale: 3/32" = 1'-0"

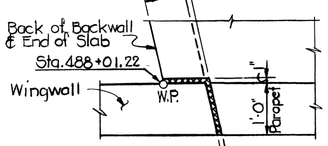

DETAIL B
Scale: 3/4" = 1'-0"

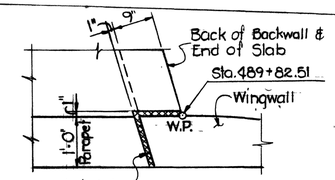

DETAIL 'C'
Scale: 3/4" = 1'-0"

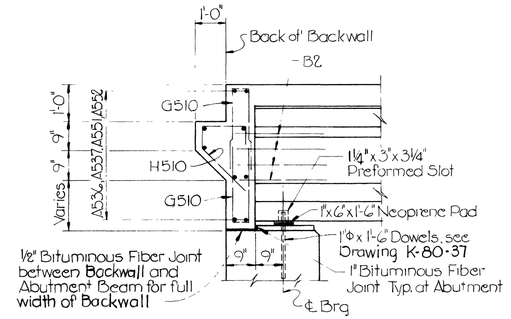

TYPICAL SECTION AT ABUTMENTS
Scale: 1/2" = 1'-0"

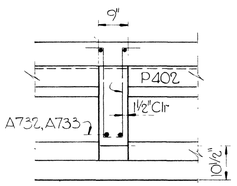

TYPICAL SECTION THRU INTERMEDIATE DIAPHRAGM
Scale: 1/2" = 1'-0"

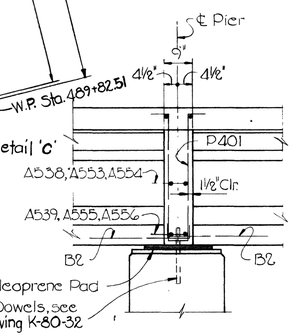

TYPICAL SECTION AT PIERS
Scale: 1/2" = 1'-0"

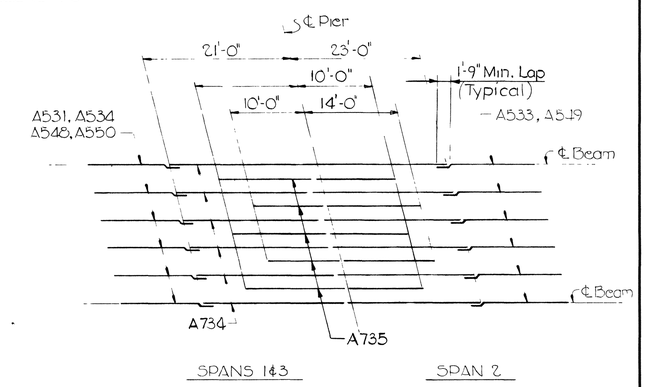

DETAIL A
Not to Scale

Notes:

1. Slab Construction Joints may be located at the Contractors option. However, no equipment shall be permitted on the bridge until all the pours are made and the concrete properly cured.
2. When pouring slab, provisions shall be made for setting steel for concrete parapet. See also details on Std Dwg. K-38-154

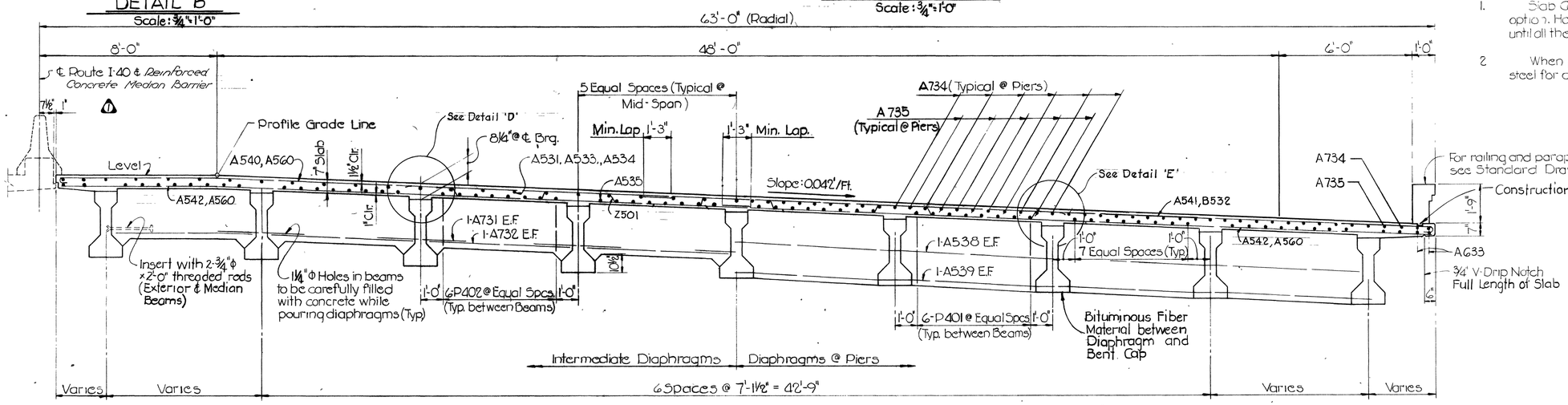

TYPICAL CROSS SECTION - S.B.L.
Scale: 3/8" = 1'-0"

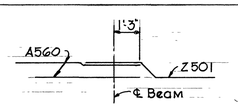

DETAIL D
Not to Scale

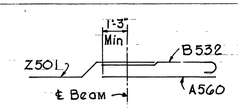

DETAIL E
Not to Scale

Scale: As Noted

* Includes N.B.L. Quantities

ESTIMATED QUANTITIES*

Concrete Class A C.Y.	Reinforcing Steel lbs
640.0	199,330

STATE OF TENNESSEE
DEPARTMENT OF HIGHWAYS
NASHVILLE

STRUCTURE NO. 23 AT STA. 488+82.13 I-40
I-40 OVER JO JOHNSON ST.
DAVIDSON COUNTY
SLAB PLAN - S.B.L.

KNOERLE, BENDER, STONE & ASSOCIATES, INC.
NASHVILLE, TENN. BALTIMORE, MD.

CORRECT _____ BRIDGE ENGINEER
APPROVED _____ STATE HIGHWAY ENGINEER

K-80-35

DESIGNED BY	A.P.S.	DATE	MAY, 68
DRAWN BY	N.M.S.	DATE	MAY, 68
TRACED BY	N.M.S.	DATE	MAY, 68
CHECKED BY	J.S.P.	DATE	OCT, 68

FED ROAD DIST NO	STATE	FED. AID PROJ. NO	FISCAL YEAR	SHEET NO	TOTAL SHEETS
3	TENN	I-40-4(20)208	1968	124	360

△1 8-2-71 CFC Revised Median Barrier Detail, Typ Cross-Sect.

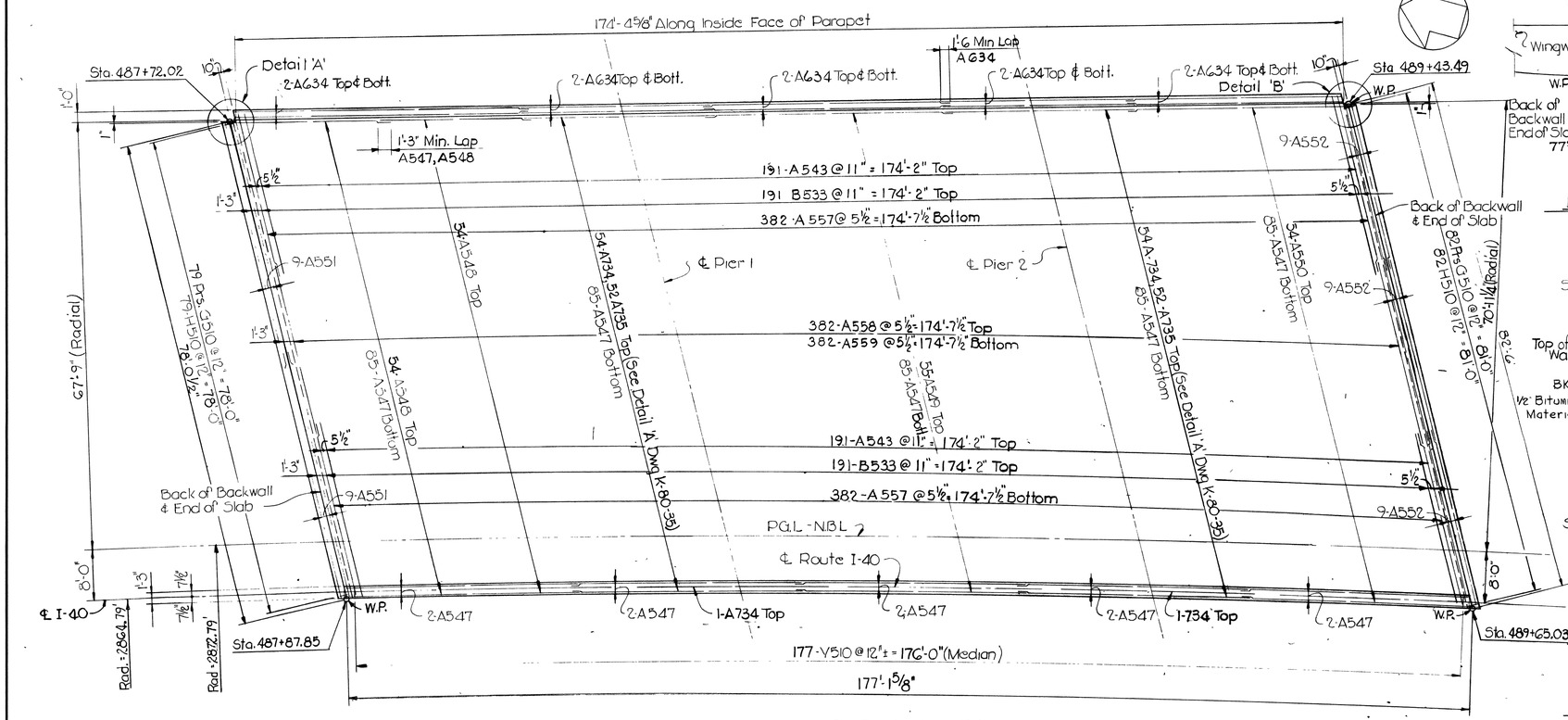

SLAB PLAN - N.B.L.

Scale: 3/32" = 1'-0"

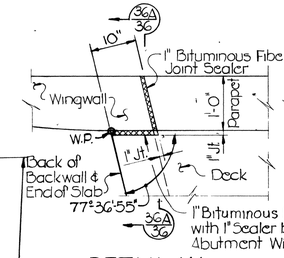

DETAIL 'A'

Scale: 3/4" = 1'-0"

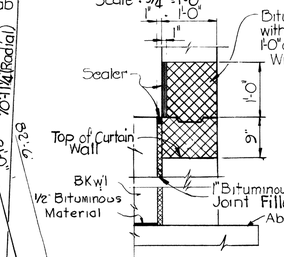

SECTION 36A

Scale: 3/4" = 1'-0"

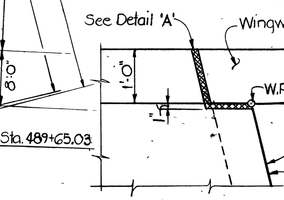

DETAIL 'B'

Scale: 3/4" = 1'-0"

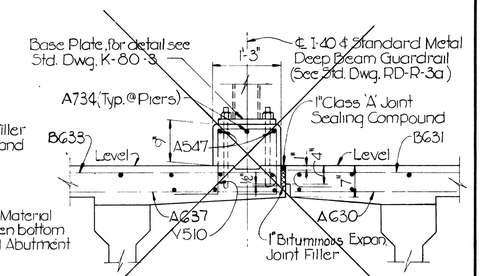

TYPICAL CROSS SECTION AT MEDIAN

Scale: 3/4" = 1'-0"

△1 Note: See Reinforced Concrete Median Barrier Detail, Dwg K-80-48

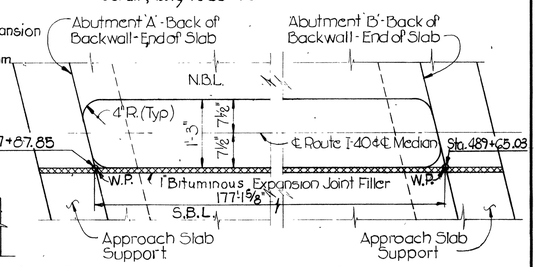

JOINT DETAILS AT ABUTMENTS

Scale: 3/4" = 1'-0"

Notes:

1. Slab Construction Joints may be located at the Contractors option. However, no equipment shall be permitted on the bridge until all pours are made and the concrete properly cured.
2. When pouring slab, provisions shall be made for setting steel for concrete parapet. See also details on Std Dwg K-38-154
3. For Typical Sections at Abutments, Piers and thru Intermediate Diaphragm see Dwg. K-80-35

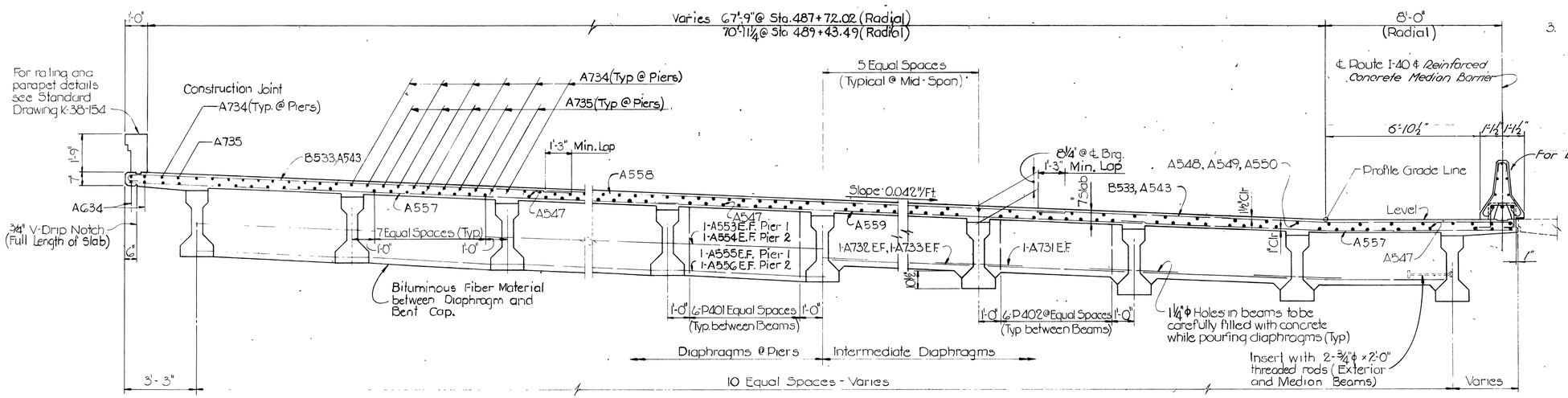

TYPICAL CROSS SECTION - N.B.L.

Scale: 3/8" = 1'-0"

Scale: As Noted

STATE OF TENNESSEE
DEPARTMENT OF HIGHWAYS
NASHVILLE

STRUCTURE NO. 23 AT STA. 488+82.13 I-40
I-40 OVER JO JOHNSON ST.
DAVIDSON COUNTY
SLAB PLAN - N.B.L.

KNOERLE, BENDER, STONE & ASSOCIATES, INC.
NASHVILLE, TENN. BALTIMORE, MD.

CORRECT _____ BRIDGE ENGINEER
APPROVED _____ STATE HIGHWAY ENGINEER

K-80-36

DESIGNED BY	APS	DATE	MAY, 68
DRAWN BY	NMS	DATE	MAY, 68
TRACED BY	NMS	DATE	MAY, 68
CHECKED BY	JSP	DATE	OCT 68

MICROFILMED

FED. ROAD DIST. NO.	STATE	FED. AID PROJ. NO.	FISCAL YEAR	SHEET NO.	TOTAL SHEETS
3	TENN.	I-40-4(20)208	1968	125	360

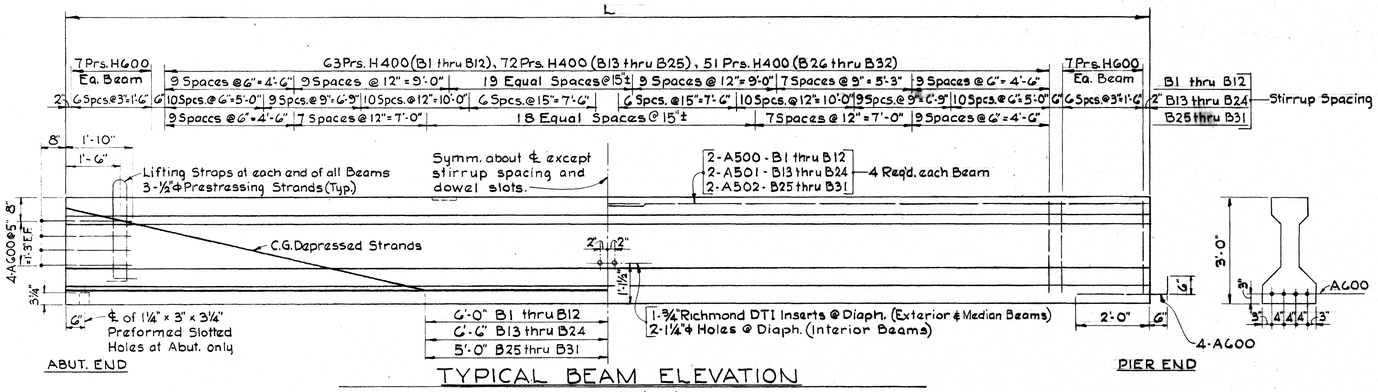

TYPICAL BEAM ELEVATION

Scale: 1/2" = 1'-0" (Vert.)

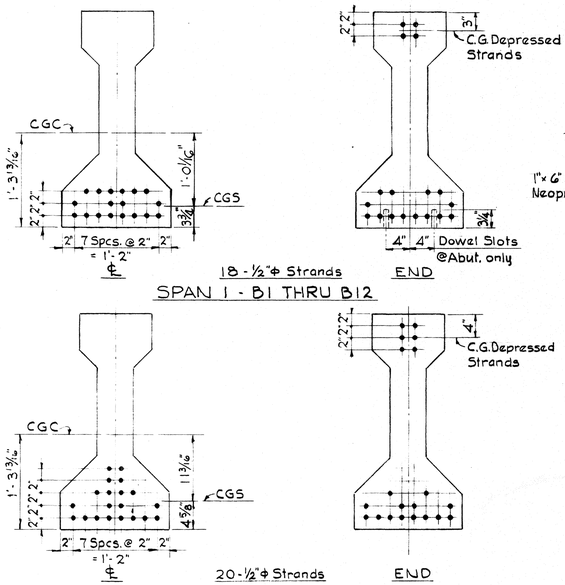

STRAND PATTERN - TYPE II BEAMS

Scale: 1" = 1'-0"

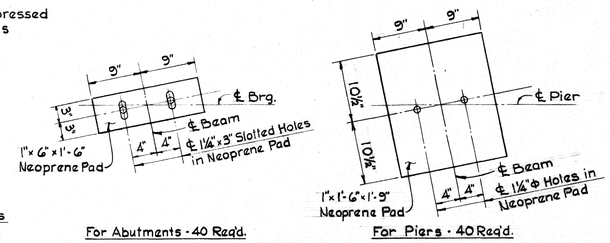

BEARING PAD DETAILS

Scale: 1" = 1'-0"

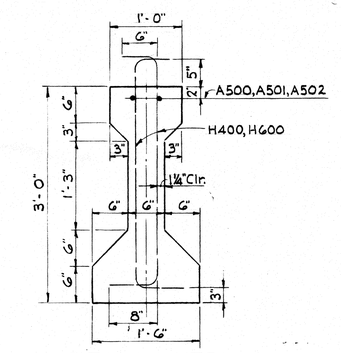

BEAM WEB REINFORCING

Scale: 1" = 1'-0"

BEAM SCHEDULE

Mark	No.	Length *	Mark	No.	Length *
B1	1	60'-6 3/8"	B17	1	63'-10 3/8"
B2	1	60'-6 3/4"	B18	1	63'-11 1/8"
B3	1	60'-7 1/8"	B19	1	63'-11 1/2"
B4	1	60'-7 1/2"	B20	1	64'-0"
B5	1	60'-7 7/8"	B21	1	64'-0 1/2"
B6	1	60'-8 3/8"	B22	1	64'-0 7/8"
B7	1	60'-8 3/4"	B23	9	64'-1 1/2"
B8	1	60'-9 1/8"	B24	1	64'-2 1/2"
B9	1	60'-9 3/8"	B25	2	48'-3 1/8"
B10	1	60'-10"	B26	2	48'-3 1/4"
B11	9	60'-10 1/2"	B27	2	48'-4 3/8"
B12	1	60'-11 3/8"	B28	2	48'-5"
B13	1	63'-9"	B29	2	48'-5 5/8"
B14	1	63'-9 1/2"	B30	9	48'-6 1/4"
B15	1	63'-9 3/4"	B31	1	48'-7"
B16	1	63'-10 1/4"			

* Lengths are out to out

BEAM REINFORCING SCHEDULE

Bar	Number Span 1	Number Span 2	Number Span 3	Size	Length	Location
H400	2520	2880	2040	4	4'-4"	Web Stirrups
A600	240	160	240	6	3'-0"	Dowels @ Bm. Ends
H600	560	560	560	6	4'-4"	Web Stirrups
A500	80	—	—	5	31'-0"	Top Flange
A501	—	80	—	5	32'-7"	" "
A502	—	—	80	5	24'-9"	" "

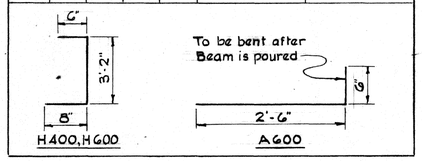

Notes:

1. The top of all beams is to be rough floated. At approximately the time of inital set, the top of beams will be scrubbed transversely with a coarse wire brush to remove all laitence and to produce a rough surface.
2. Preformed holes for diaphragm connection shall be 1 1/4"Φ. Threaded inserts for Intermediate Diaphragm at Exterior Beam Connections are to be Richmond Type DT-1, Type DT1-S or equal. Threaded rods are to provide 2'-0" splice with Diaphragm reinforcing.
3. Anchorage at expansion end of beams accomplished by Dowels 1"Φ x 1'-6" (80 required), at fixed end Dowels 1"Φ x 1'-9" (80 required).
4. All prestressing strands shall be 1/2"Φ high strength type 270K 7 wire uncoated stress-relieved prestressing strands.
5. All beams are AASHO-PCI Standard Type II.
6. An initial force of 28,910 lbs. shall be applied to each strand in all beams.
7. Concrete strength at release of tension shall be 4,500 p.s.i.
8. Mild steel reinforcing shall be A.S.T.M. A615
9. After the beam is removed from the prestress bed, bars A600 shall bent vertically a sufficient amount so as to permit bars A600 of adjoining beams to mesh when in erected position.
10. The strands shall be left projecting 3"± from the ends of the beams. There shall not be any protective coating placed on the ends of the beams or on the projecting strands.
11. Size 17 coarse aggregate will be permitted in the concrete

ESTIMATED QUANTITIES PER BEAM

BEAM	Concrete Class 'A' Cu. Yds.	Reinforcing Steel lbs.	Prestressing Steel lbs.	Threaded Inserts No. *	Threaded Rods No. *
B1 thru B12	5.8	730	590	1	2
B13 thru B24	6.1	770	680	1	2
B25 thru B31	4.6	635	365	1	2

* Exterior and Median Beams only.

Scale: As Noted

STATE OF TENNESSEE
DEPARTMENT OF HIGHWAYS
NASHVILLE

STRUCTURE NO. 23 AT STA. 488+82.13 I-40
I-40 OVER JO JOHNSON ST.
DAVIDSON COUNTY
PRESTRESSED BEAM DETAILS

KNOERLE, BENDER, STONE & ASSOCIATES, INC.
NASHVILLE, TENN. BALTIMORE, MD.

CORRECT _____ BRIDGE ENGINEER
APPROVED _____ STATE HIGHWAY ENGINEER

K-80-37

DESIGNED BY	A.P.S.	DATE	MAY, 68
DRAWN BY	W.O.D.	DATE	JUNE, 68
TRACED BY	W.O.B.	DATE	JUNE, 68
CHECKED BY	J.S.P.	DATE	OCT. 68

MICROFILMED

FED ROAD DIST. NO	STATE	FED AID PROJ NO	FISCAL YEAR	SHEET NO	TOTAL SHEETS
3	TENN.	I-40-4(20)208	9̶6̶8̶	126	360

SLABS

MARK	BAR	NUMBER	SIZE	LENGTH	a	b	c	d	e	f	LOCATION
A531	A	88	5	22'-0"							Slab
A533	A	44	5	22'-5							Slab
A534	A	44	5	30'-9"							"
A535	A	340	5	36'-5"							"
A536	A	18	5	32'-3"							"
A537	A	18	5	32'-5"							"
A538	A	8	5	29'-11"							Diaphragm
A539	A	8	5	30'-6"							"
A540	A	191	5	29'-2"							Slab
A541	A	191	5	36'-7"							"
A542	A	382	5	32'-8"							"
A543	A	382	5	22'-11"							"
A547	A	435	5	36'-4"							Median & Slab
A548	A	108	5	21'-10"							Slab
A549	A	55	5	21'-5"							"
A550	A	54	5	31'-0"							"
A551	A	18	5	40'-0"							Backwall
A552	A	27	5	28'-0"							"
A553	A	4	5	37'-5"							Diaphragm
A554	A	4	5	38'-2"							"
A555	A	4	5	37'-11"							"
A556	A	4	5	38'-8"							"
A557	A	764	5	26'-8"							Slab
A558	A	382	5	40'-0"							"
A559	A	382	5	32'-3"							"
A560	A	573	5	19'-0"							"
A633	A	20	6	36'-3"							Slab
A634	A	20	6	36'-0"							"
A731	A	96	7	5'-0"							Diaphragm
A732	A	104	7	6'-8"							"
A733	A	4	7	6'-3"							"
A734	A	198	7	44'-0"							"
A735	A	186	7	24'-0"							"
B532	B	191	5	19'-7"	19'-0"						Slab
B533	B	382	5	23'-10"	22'-11"						"
G510	G	574	5	5'-8"	2'-7	6"					
H510	H	287	5	4'-1"	6"	1'-5"	5"	1'-9"	1'-1"	1'-5"	
P401	P	216	4	8'-4"	6"	3'-5"	6"				
P402	P	324	4	6'-6"	6"	2'-6"	6"				Diaphragm
Y510	Y	177	5	3'-11"	11"	1'-0"	6"				Median
Z501	Z	191	5	33'-2"	31'-11"	3'-0"	4½"	3'-2"	3'-5"	6⅜"	Slab
				REINFORCED CONCRETE MEDIAN BARRIER							
A401	A	25	4	36'-2"							Median Barrier
AB401	AB	177	4	2'-6"	1'-0"	1'-0"					" "
X401	X	89	4	2'-2"	8½"	11"	8½"	3½"	7"		Median Barrier

PIERS

MARK	BAR	NUMBER PIER 1	NUMBER PIER 2	SIZE	LENGTH	a	b	c	d	e	f	LOCATION
A560	A	4	4	5	40'-6"							Cap
A561	A	4	4	5	32'-4"							"
A630	A	4	4	6	8'-6"							Cap
A631	A	4	4	6	7'-3"							"
A820	A	4	4	8	19'-0"							Cap
A821	A	4	4	8	36'-0"							"
A822	A	8	8	8	9'-10"							"
A823	A	4	4	8	7'-4"							"
A910	A	16		9	28'-2"							Column
A911	A	16		9	27'-5"							"
A912	A	16		9	26'-7"							"
A913	A	16		9	26'-1"							"
A914	A	16		9	27'-4"							"
A915	A	8	8	9	10'-4"							Cap
A916	A	16		9	28'-6"							Column
A917	A	16		9	29'-10"							"
A918	A	16		9	31'-4"							"
A919	A		16	9	33'-7"							"
A920	A		16	9	29'-6"							"
A921	A		16	9	25'-4"							"
A922	A		32	9	21'-4"							"
A923	A		16	9	19'-4"							"
A924	A		16	9	17'-4"							"
A925	A		16	9	16'-4"							"
A1001	A	12	12	10	12'-10"							Cap
A1002	A	12		10	12'-6"							"
A1003	A	12		10	23'-9"							"
A1004	A		12	10	24'-3"							"
A1005	A		12	10	13'-0"							
B910	B	8	8	9	34'-1"	32'-10						Cap
B911	B	4	4	9	12'-9"	11'-6						"
B912	B	4		9	12'-0"	10'-9						"
B913	B		4	9	12'-5"	11'-2"						"
B1010	B	8		10	42'-2	40'-9"						Cap
B1011	B	6	6	10	15'-0"	13'-7"						"
B1012	B	6	6	10	15'-5"	14'-0						"
B1013	B		8	10	43'-1"	41'-6"						"
C910	C	128	128	9	5'-10"	5'-1"	9"					Footing
D510	D	72	72	5	7'-2"	6'-0"						Footing
D610	D	104	104	6	9'-4"	8'-0"						Footing
L610	L	4	4	6	8'-0"	5'-10½	2'-1½"	2'-1"	4¼"			Cap
L611	L	4		6	6'-5"	4'-3½"	2'-1½"	2'-1"	5¾"			"
L612	L		4	6	6'-10"	4'-8½"	2'-1½"	2'-1"	5¾"			"
N410	N	320	320	4	11'-6"	1'-9¾"	3'-5"	1'-0"				Cap
N411	N	18	18	4	9'-5½" to 11'-0½" (2EA.V.B2")	1'-9¾"	*	1'-0"	* 2'-	5" to	3'-2½"	"
									(2EA	V.B.	1")	
N412	N	206	166	4	10'-4"	2'-5"	2'-5"	8"				Column
N414	N	12		4	9'-5½" to 11'-0½ (2EA.V.B 2¾")	1'-9¾"	*	1'-0"	* 2'-	5" to	3'-2½"	"
									(2EA	V.B.	1⅛"	
N415	N	12		4	9'-5½" to 10'-9½" (2EA.V.B ½")	1'-9¾"	*	1'-0"	* 2'-	5" to	3'-1"	"
									(2EA	V.B.	1¾)	

ABUTMENT A

MARK	BAR	NUMBER	SIZE	LENGTH	a	b	c	d	e	f	LOCATION
A401	A	4	4	3'-0"							Wingpost
A402	A	4	4	3'-3"							"
A403	A	4	4	3'-6"							"
A404	A	4	4	3'-8"							"
A405	A	12	4	3'-10"							
A406	A	12	4	5'-8"							
A407	A	4	4	7'-2"							Wingwall
A408	A	16	4	8'-10"							"
A409	A	32	4	5'-3"							"
A410	A	8	4	4'-7"							"
A501	A	10	5	32'-11							Footing
A502	A	10	5	40'-6							"
A503	A	8	5	8'-10"							"
A701	A	16	7	33'-2							Footing
A702	A	16	7	40'-8"							"
A703	A	16	7	8'-10"							"
N501	N	132	5	9'-8"	2'-2"	2'-2"	1'-0"				Footing

ABUTMENT B

MARK	BAR	NUMBER	SIZE	LENGTH	a	b	c	d	e	f	LOCATION
A401	A	4	4	3'-0"							Wingpost
A402	A	4	4	3'-3"							"
A403	A	4	4	3'-6"							"
A404	A	4	4	3'-8"							"
A405	A	12	4	3'-10"							"
A406	A	12	4	5'-8"							"
A407	A	4	4	7'-2"							Wingwall
A408	A	16	4	8'-10"							"
A409	A	32	4	5'-3"							"
A410	A	8	4	4'-7"							"
A503	A	8	5	8'-10"							Footing
A504	A	5	5	42'-0"							"
A505	A	5	5	43'-6"							"
A506	A	5	5	33'-6"							"
A507	A	5	5	33'-0"							"
A703	A	16	7	8'-10"							Footing
A704	A	8	7	42'-0"							"
A705	A	8	7	44'-6"							"
A706	A	8	7	34'-3"							"
A707	A	8	7	33'-3"							"
N501	N	137	5	9'-8"	2'-2"	2'-2"	1'-0"				Footing

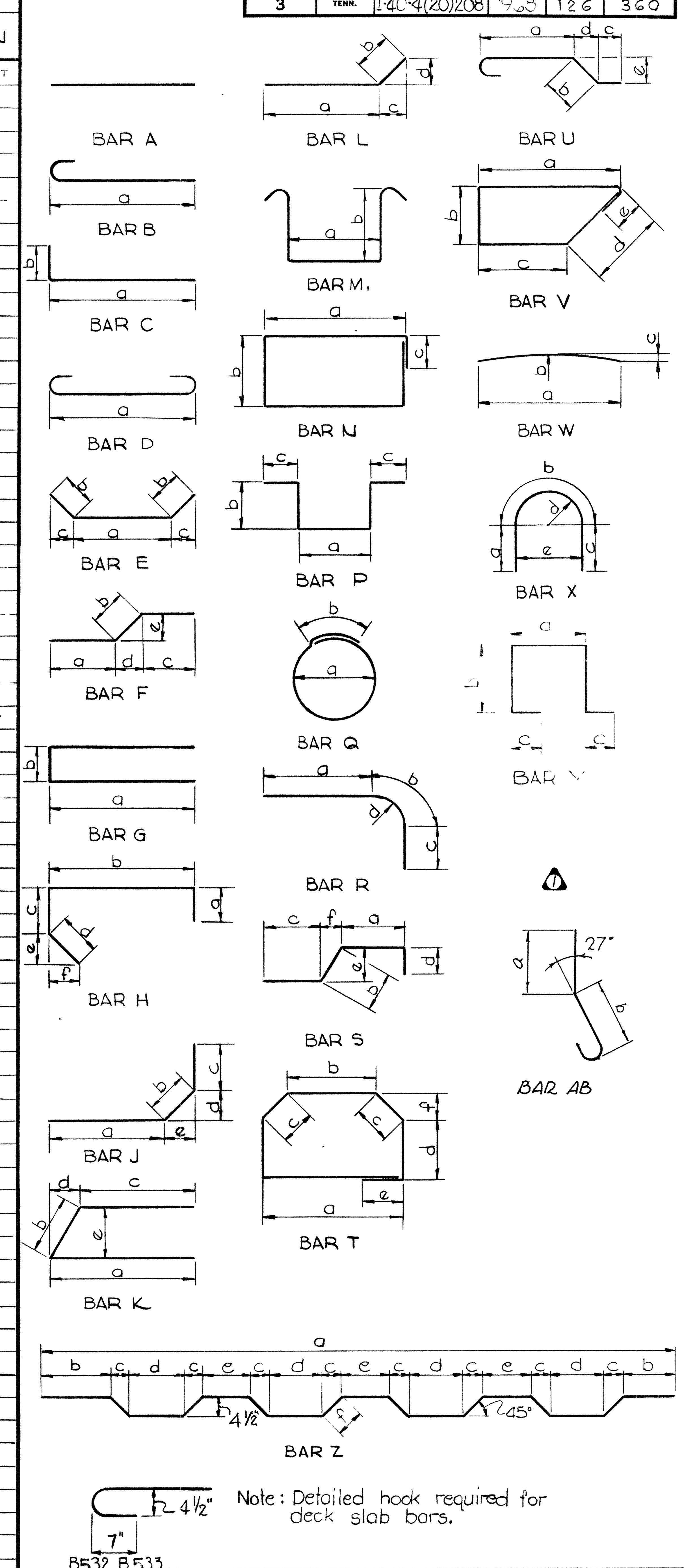

⚠1 8-2-71 CEC Added Reinf. Conc. Med. Barrier

NOTES:
1. Reinforcing steel detailed as per Manual of Standard Practice for Reinforced Concrete Structures A.C.I.

3. Bar dimensions are out to out.

DESIGNED BY APS DATE APRIL 68
DRAWN BY J.C.R. DATE APRIL 68
TRACED BY J.C.R. DATE MAY 68
CHECKED BY J.S.P. DATE OCT 68

STATE OF TENNESSEE
DEPARTMENT OF HIGHWAYS
NASHVILLE

STRUCTURE NO. 23 AT STA. 488+82.13 I-40
I-40 OVER JO JOHNSON ST.
DAVIDSON COUNTY
REINFORCING STEEL SCHEDULE

KNOERLE, BENDER, STONE & ASSOCIATES, INC.
NASHVILLE, TENN. BALTIMORE, MD.

CORRECT ______ BRIDGE ENGINEER
APPROVED ______ STATE HIGHWAY ENGINEER

K-80-38

5/15/85 ELC Added Signs

3-3-70 W.M.M. REV. NOTE UNDER QUA. BOX. & NO. REQ'D.

8-2-71 Revised Quantity Block for Reinf. Conc Med Barrier

FED. ROAD DIST. NO.	STATE	FED. AID PROJ. NO.	FISCAL YEAR	SHEET NO.	TOTAL SHEETS
3	TENN.	I 40-4 (20) 208	1967	127	360

6-2-69 DWF Revision of Quantity Notes

11-4-69 E.R.C. Bridgerail Dimensions

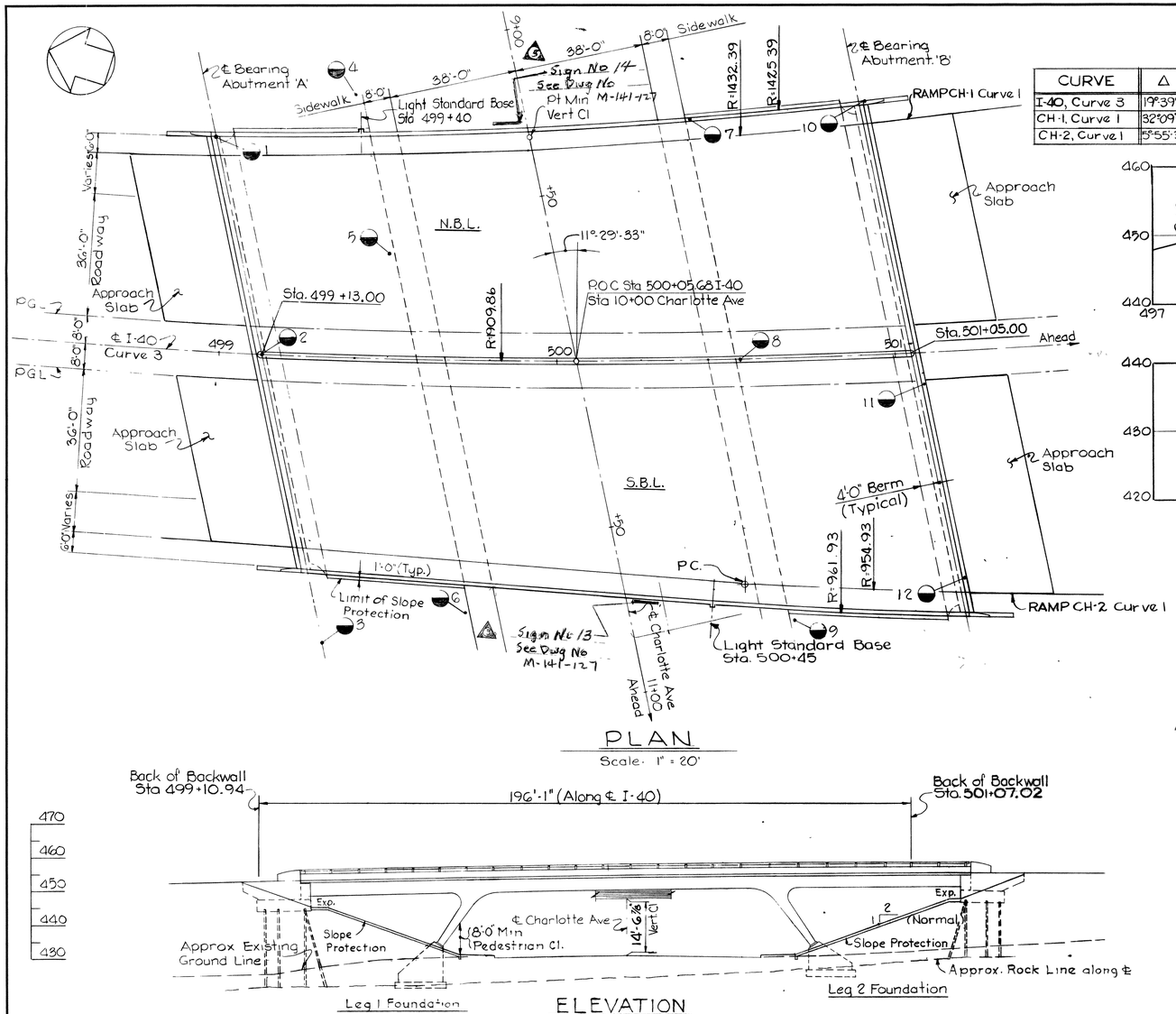

PLAN

Scale: 1" = 20'

CURVE DATA

CURVE	Δ	Dc	R	T	L	E	PI Sta.	PC Sta.	PT Sta.
I-40, Curve 3	19°39'51"	3°	1909.86	330.99	655.47	28.47	501+39.77	498+08.78	504+64.25
CH-1, Curve 1	32°09'58"	4°	1432.39	412.98	804.15	58.35	500+82.98	496+70.00	504+74.15
CH-2, Curve 1	5°55'37"	6°	954.93	49.44	98.78	1.28	501+00.66	500+51.22	501+50.00

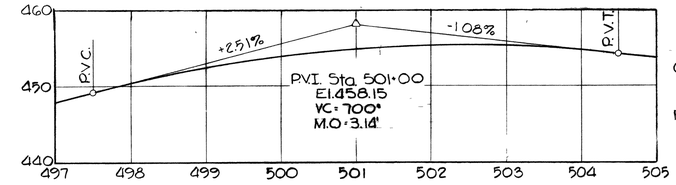

I-40

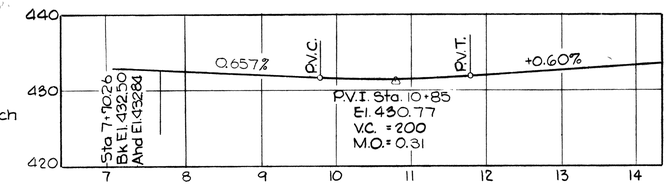

CHARLOTTE AVENUE

PROFILE GRADE LINES

Scales: Horiz. 1" = 100'
Vert. 1" = 10'

INDEX OF DRAWINGS

SHEET NO.	TITLES
K-80-39	General Plan & Elevation
K-80-40	Abutment 'A' S.B.L.
K-80-41	Abutment 'A' N.B.L.
K-80-42	Abutment 'B' N.B.L.
K-80-43	Abutment 'B' S.B.L.
K-80-44	Footing Layout & Details
K-80-45	Framing Plan
K-80-46	Girder Details
K-80-47	Slab Plan
K-80-48	Slab Section
K-80-49	Reinforcing Steel Schedule
K-80-1	Std. Bolted Beam Splice Details
K-80-2	Typical Standard Steel Details
K-80-3	Std. Abutment & Retaining Wall Details
K-80-4	Std. Details Light Standard Base & Guard Rail Attachment
K-38-154	Bridge Railing
K-56-34	Steel Pile Splice

GENERAL NOTES

SPECIFICTIONS:
General-Tennessee Department of Highways "Road and Bridge Specifications", 1951 Edition, and the Supplemental Specifications and Special Provisions.
Design-AASHO Standard Specifications for Highway Bridges, 1965 Edition. with Addenda. Capacity - HS 20-44 Loading and the B.P.R. modified loading for Military Vehicles.

CONCRETE:
All Concrete shall be Class 'A'. Chamfer all exposed edges of concrete 1" X 1" unless otherwise shown or noted.

FOUNDATIONS:
The Foundations of Abutments shall be on piles
The Foundations of Frame Legs shall rest on rock. When Foundations for Frame Legs have been uncovered, holes 6 feet deep shall be drilled into the rock at points designated by the Engineer. From the results obtained, the Engineer shall determine the final footing elevation. No reinforcing steel shall be ordered until final footing elevations are determined.

REINFORCEMENT:
All reinforcing steel shall be A.S.T.M. A615.
All reinforcing bar dimensions on the detail drawings are to be centerline of bar except where the clear distance is noted from face of concrete.

STRUCTURAL STEEL:
Structural Steel shall conform to ASTM-A36 except for the portion of girder indicated on the girder elevation, which shall conform to ASTM 441 Modified

JOINT SEALER:
See Special Provisions Type II Class 'A' or 'B'.

PILES:
All Piles shall be 10 BP 42 and driven to refusal or a min. brg. of 55 tons at abutments.

PAINT:
Basic Lead Silica Chromate. See Special Provisions regarding Section 132 Steel Structures (Painting). No paint shall be applied to the top surfaces of the top flanges or at any point of field welded or bolted connection. Splices and other field connections shall be cleaned and primed before forming slab.

WELDING:
Welding shall be in accordance with the current edition of the AWS Specifications for Welded Highway and Railway Bridges, See Special Provisions regarding Welding Structures. Cost of Radiographic and Magnetic Particle inspection to be included in cost of items bid on.

HIGH TENSILE BOLTS:
See notes on drawing No K-80-46, K-80-48

FILLS:
Fills at ends of bridge shall be in place and thoroughly compacted before Abutment piles are driven.

SHOP INSPECTION OF STEEL STRUCTURE:
The Contractor, as soon as he receives his work orders, shall notify the Bridge Engineer, in writing, who will supply the Structural Steel and the location of the plant where it will be fabricated.

FABRICATION OF STRUCTURAL STEEL:
No Fabrication shall be started until the materials involved have been approved by the Tennessee Highway Division of Tests.
Heat numbers on main materials must be preserved or transferred during fabrication and shop painting so that they will be identifiable in the field.

LIGHTING:
For details of Light Standards and Conduits, see sheet 84 and Standard Drawing K-80-4.

STUD SHEAR CONNECTORS
Stud shear connectors shall conform to the requirements of AASHO Standard Specifications for Highway Bridges Article 2.10.3A and 2.10.23

BRIDGE RAILING:
Build Bridge Railing according to Standard Drawing K-38-154.
Dimension Lt. Parapet = 1'-0 7/8", N = 24 Spaces @ L = 7'-11 1/4"
Rt. Parapet = 11 1/2", N = 25 Spaces @ L = 7'-9 3/4"

ROADWAY:
Roadway Width Varies

ELEVATION

Scale: 1" = 20'

Denotes Boring Location

BORING	STATION	OFFSET	GROUND ELEVATION	ROCK ELEVATION
1	498+96	63' Lt	426.2	421.2
2	499+13	℄	425.2	422.2
3	499+33	85' Rt	426.1	421.1
4	499+38	78' Lt.	429.1	424.1
5	499+49	31' Lt.	427.5	421.5
6	499+74	74' Rt	428.1	423.1
7	500+41	71' Lt.	432.1	429.1
8	500+54	℄	431.4	428.4
9	500+68	78' Rt.	430.7	427.7
10	500+94	75' Lt	433.8	424.8
11	501+08	9' Rt	436.1	431.1
12	501+17	67' Rt	433.7	428.7

ESTIMATED QUANTITIES

	Excavation Dry C.Y.	Excavation ROCK C.Y.	Concrete Class 'A' C.Y.	Reinforcing Steel Lbs.	Steel Structures L.S.*	Bearing Piles 10BP42 L.F.	Bridge Railing L.F.	Linseed Oil Treatment Sq Yds.**	Rock Drilling L.F.	Reinf. Conc. Med. Barrier L.F.	Structure Lighting L.S.
Superstructure			803.4	246,850			386	3230		195	
Abutment 'A'	–	–	77.8	9,200		760			–		
Leg 1 Foundation	425	180	236.2	12,650		–			84		
Leg 2 Foundation	370	485	236.2	12,650		–			84		
Abutment 'B'	–	–	89.4	10,250		675			–		
Total	795	665	1437.0	291,600		1435	386	3230	168		

Notes: Cost of Joint Sealer and Bituminous Fiber Material to be included in price of items bid on.
Cost of 6" ϕ C.P.M.P and Porous Backfill Material to be included in price of items bid on.
Excavation based on lower road profile
Cost of Light Standard Base including Concrete Reinforcing and Anchor Bolts to be included in price bid for Bridge Railing
Lighting Lump sum is for complete installation of all Structural Lighting as shown on plans.
*Total estimated weight structural steel 633,700# includes Bearing Devices, Shear Connectors, and Weld Materials.
**Special Provision on Linseed Oil Treatment does not apply to Leg Foundations.
Cost of 48-threaded steel inserts and 48 - 7/8" ϕ x 4" Hex. Head bolts (A307), to be included in BRIDGE ITEMS BID ON.

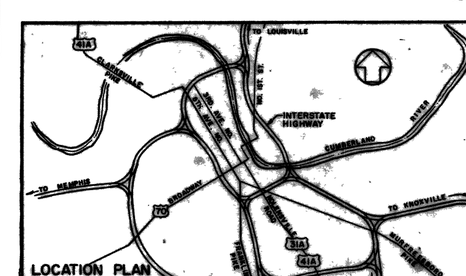

STATE OF TENNESSEE
DEPARTMENT OF HIGHWAYS
NASHVILLE

STRUCTURE NO. 24 AT STA. 500+05.68 I-40
I-40 OVER CHARLOTTE AVENUE
DAVIDSON COUNTY
GENERAL PLAN AND ELEVATION

KNOERLE, BENDER, STONE & ASSOCIATES, INC.
NASHVILLE, TENN. BALTIMORE, MD.

CORRECT _____ BRIDGE ENGINEER
APPROVED _____ STATE HIGHWAY ENGINEER

K-80-39

DESIGNED BY T.L.T. DATE May 21, 1968
DRAWN BY T.L.J. DATE May 21, 1968
TRACED BY T.L.J. DATE May 21, 1968
CHECKED BY D.S. DATE Oct 18, 1968

FED. ROAD DIST. NO.	STATE	FED. AID PROJ. NO.	FISCAL YEAR	SHEET NO.	TOTAL SHEETS
3	TENN.	I 40-4(20)208	1967	128	360

REV.
1. G-2-69 D.W.F. Guardrail Attachment & Wingwall Details
2. 10-G-69 E.R.C. Anchor Bolt Spacing.
3. 3-3-70 W.M.M. ADD. POST DETAILS. & R.E.M. NOTE @ QUA. BOX.

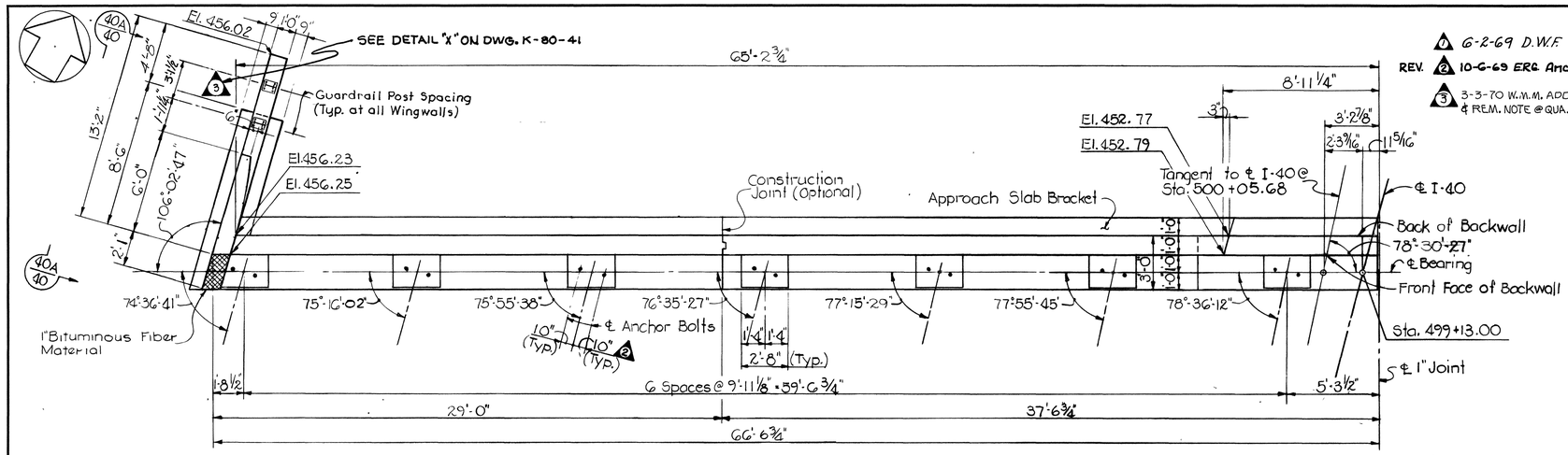

PLAN

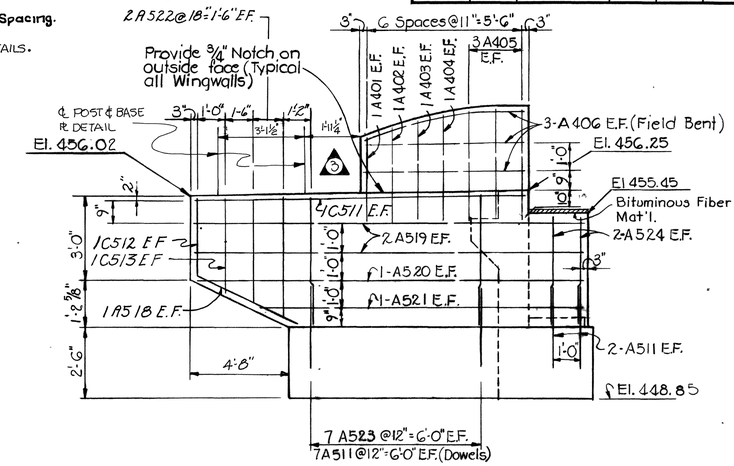

VIEW 40 A
Scale: 3/8" = 1'-0"

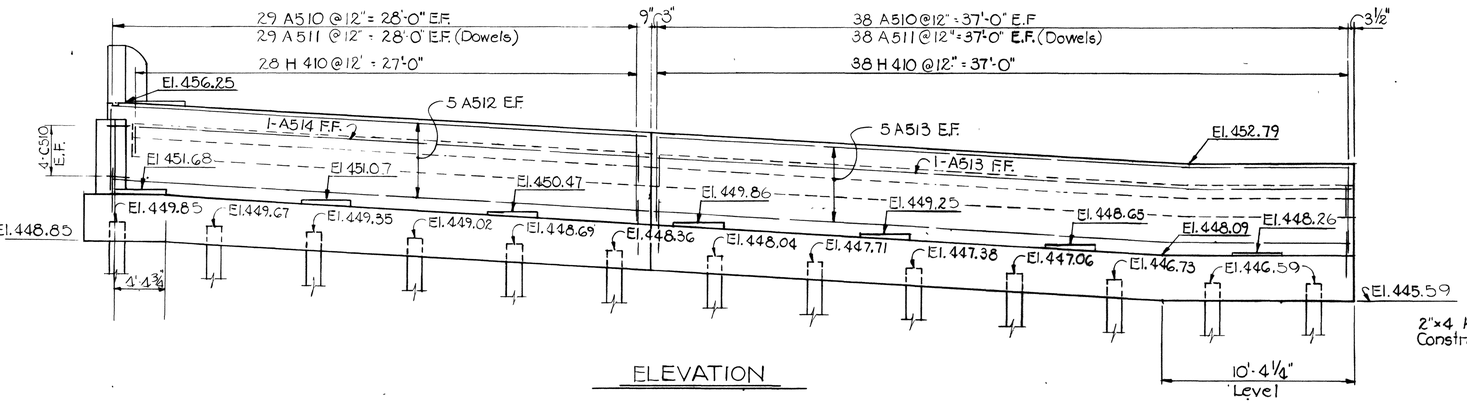

ELEVATION

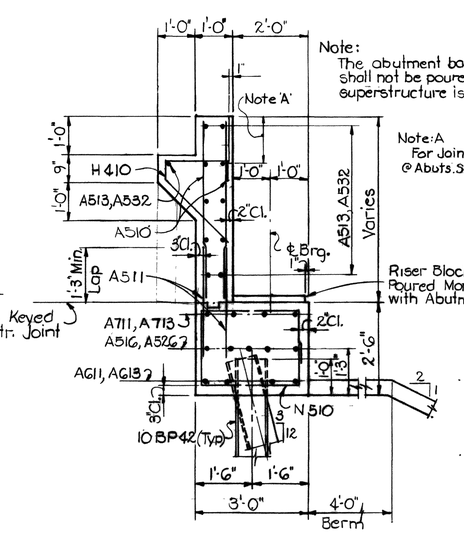

TYPICAL SECTION
ABUTMENT 'A', ABUTMENT 'B'
Scale: 1/2" = 1'-0"

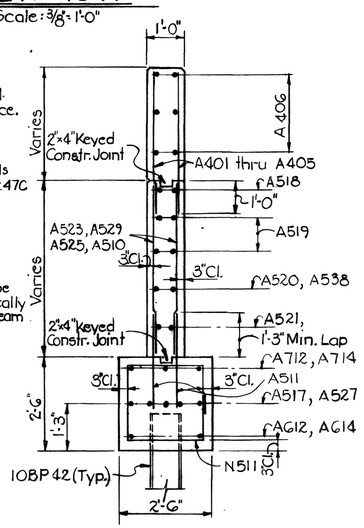

TYPICAL WINGWALL SECTION
Scale: 1/2" = 1'-0"

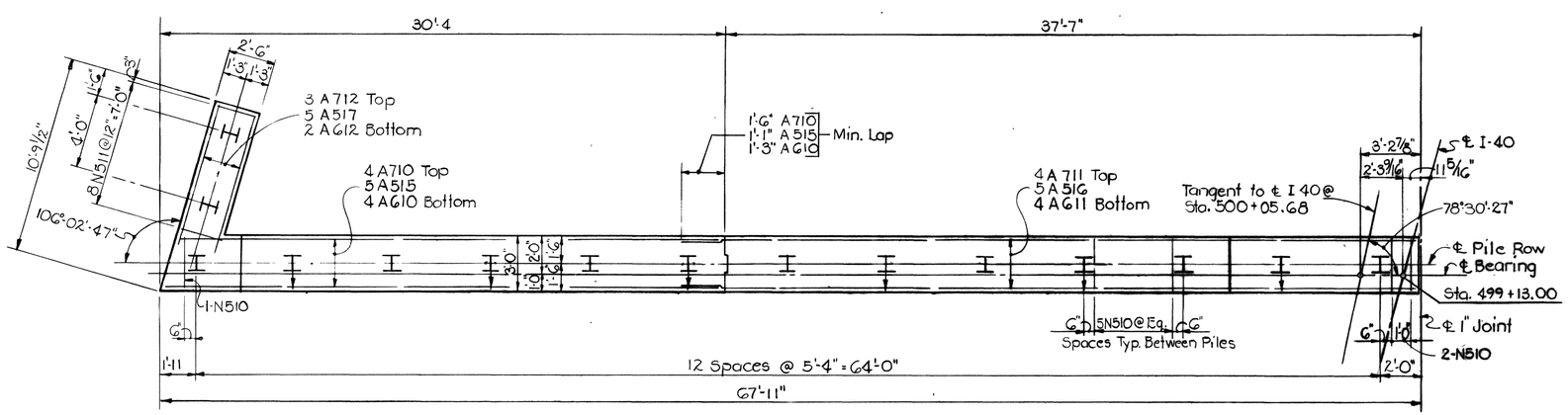

FOOTING PLAN
ABUTMENT 'A' (S.B.L.)
Scale: 1/4" = 1'-0"

I Indicates Batter Pile Forward 3:12

ABUTMENT NOTES

1. When pouring abutment and beam seat, provisions shall be made for setting anchor bolts. If the Contractor elects to drill the holes for the anchor bolts, the reinforcing steel shall be placed so as not to interfere with the drilling. Bolt projection 4". Use Bearing Device E3 2 on Std. Dwg. K-38-155.
2. Apply Linseed Oil Treatment to the top surface and front face of abutment backwall, top surface of abutment seat, the vertical and top surfaces of wingpost.
3. See Detail 'A' Dwg. K-80-4 For achorage details at Guardrail post on wall.

* ESTIMATED QUANTITIES ABUTMENT 'A' S.B.L. & N.B.L.	
CONCRETE CLASS 'A' C.Y.	REINFORCING STEEL LBS.
77.8	9,200

* Includes wingpost quantities.

STATE OF TENNESSEE
DEPARTMENT OF HIGHWAYS
NASHVILLE

STRUCTURE NO. 24 AT STA 500+05.68 I-40
I-40 OVER CHARLOTTE AVENUE
DAVIDSON COUNTY
ABUTMENT 'A' (S.B.L.)

KNOERLE, BENDER, STONE & ASSOCIATES, INC.
NASHVILLE, TENN. BALTIMORE, MD.

CORRECT _____ BRIDGE ENGINEER
APPROVED _____ STATE HIGHWAY ENGINEER

K-80-40

DESIGNED BY	T.L.T.	DATE	6-14-68
DRAWN BY	L.A.I.	DATE	6-14-68
TRACED BY	L.A.I.	DATE	6-14-68
CHECKED BY	D.S.	DATE	10-18-68

FED. ROAD DIST. NO.	STATE	FED. AID PROJ. NO.	FISCAL YEAR	SHEET NO.	TOTAL SHEETS
3	TENN.	I 40-4(20)208	1967	129	360

1 6-2-69 D.W.F. Guardrail Attachment & Wingwall Details.

REVISION 2 10-6-69 E.R.G. Anchor Bolt Spacing

3 3-3-1970 W.M.M. REV. WINGPOST DT'LS. & ADD. B & INSERT DT'LS.

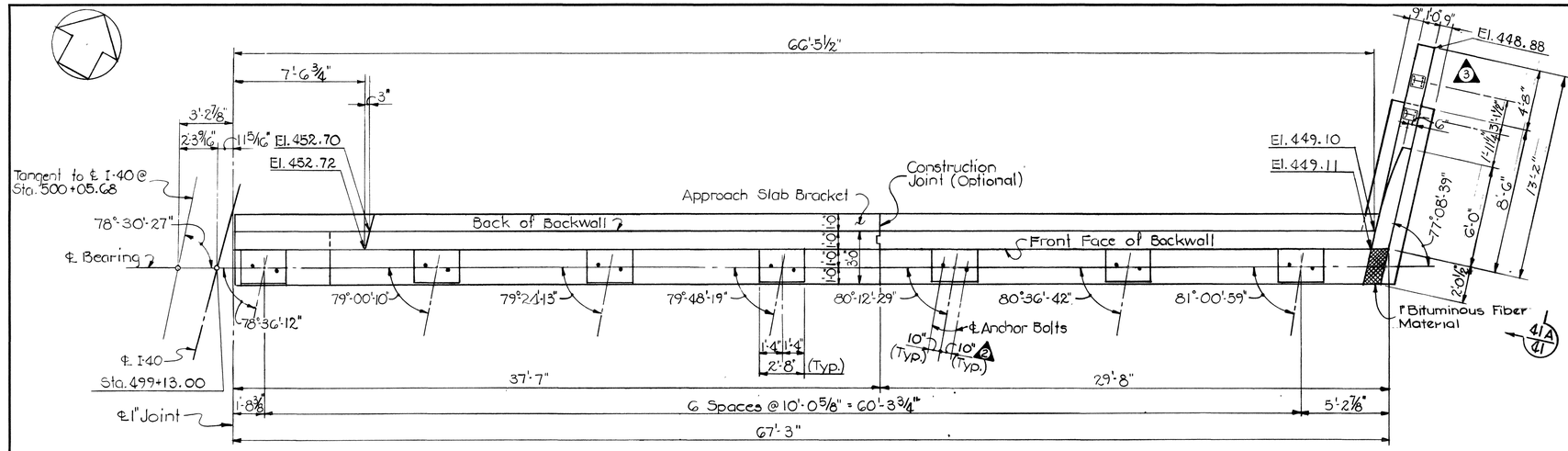

1 PLAN

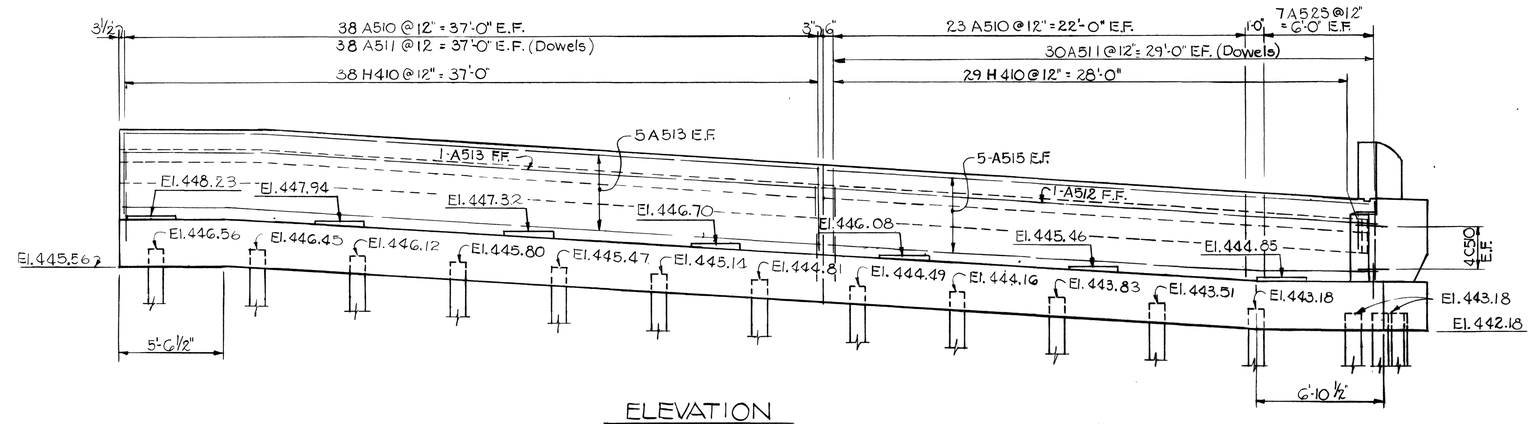

ELEVATION

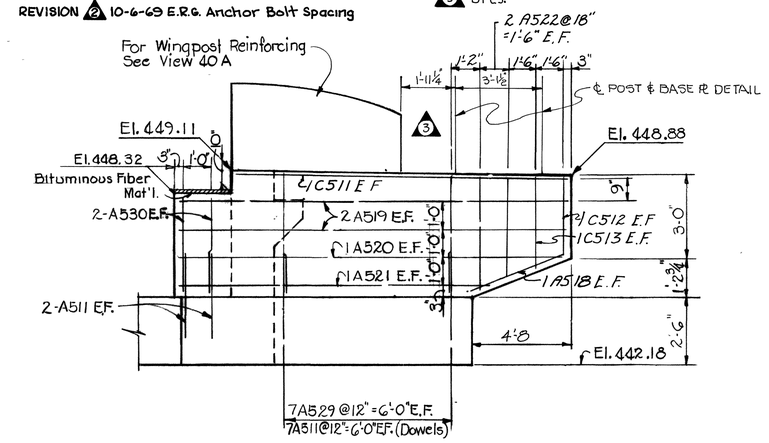

1 VIEW 41 A

Scale: ⅜" = 1'-0"

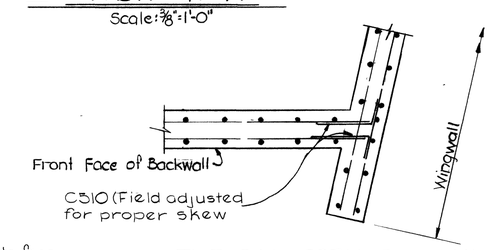

TYPICAL CORNER DETAIL

Scale: ½" = 1'-0"

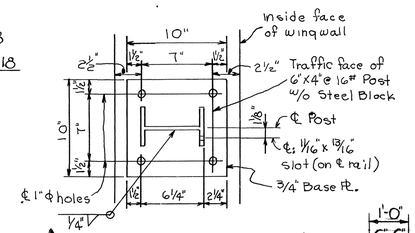

3 Guardrail Post Base Plate

DETAIL "X"

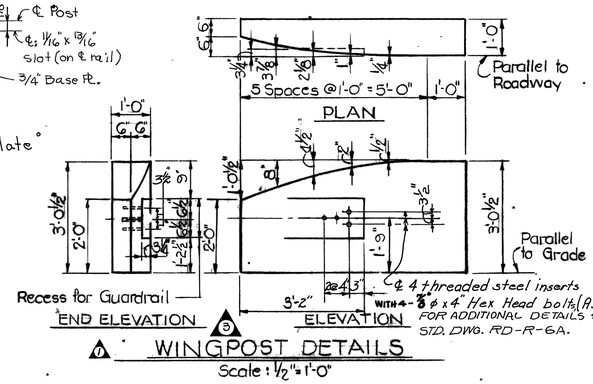

1 WINGPOST DETAILS

Scale: ½" = 1'-0"

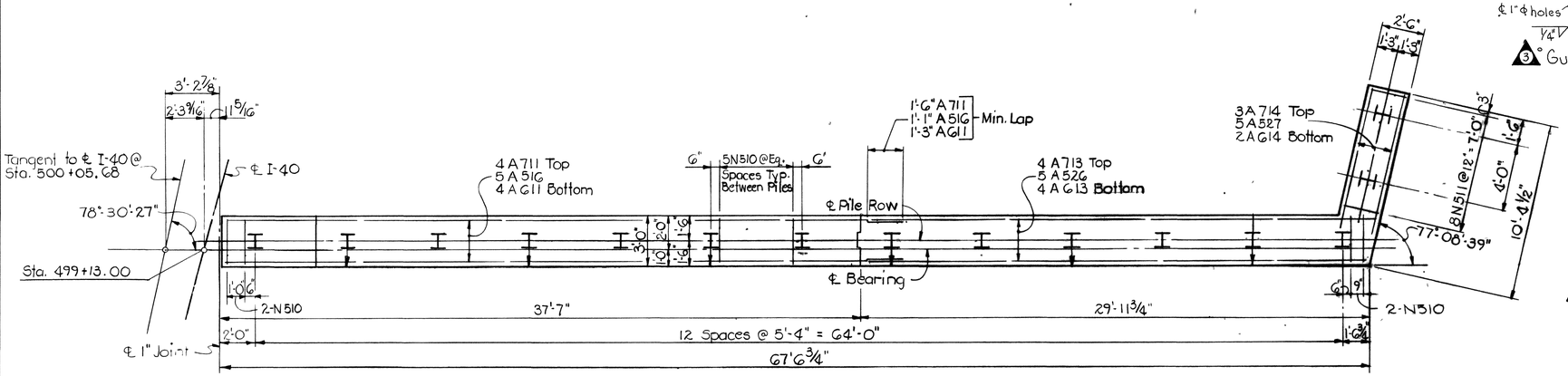

FOOTING PLAN

ABUTMENT 'A' (N.B.L.)

Scale: ¼" = 1'-0"

I Indicates Batter Pile Forward 3:12.

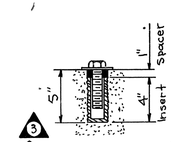

3 Threaded Insert

Note: Spacer, Insert & bolt to be cast in place.

1 Notes:

1. For Abutment Notes see Drawing K-80-40.
2. For additional details of Guardrail Attachment see Std. Dwg. No. RD-R-6A
3. Inserts to be set by Bridge Contractor.

DESIGNED BY	T.L.T.	DATE	6-14-68
DRAWN BY	L.A.I.	DATE	6-14-68
TRACED BY	L.A.I.	DATE	6-14-68
CHECKED BY	D.S.	DATE	10-18-68

STATE OF TENNESSEE
DEPARTMENT OF HIGHWAYS
NASHVILLE

STRUCTURE NO. 24 AT STA. 500+05.68 I-40
I-40 OVER CHARLOTTE AVENUE
DAVIDSON COUNTY
ABUTMENT 'A' (N.B.L.)

KNOERLE, BENDER, STONE & ASSOCIATES, INC.
NASHVILLE, TENN. BALTIMORE, MD.

CORRECT _____ BRIDGE ENGINEER

APPROVED _____ STATE HIGHWAY ENGINEER

K-80-41

FED ROAD DIST NO	STATE	FED AID PROJ. NO.	FISCAL YEAR	SHEET NO	TOTAL SHEETS
3	TENN.	I40-4(20)208	1967	130	360

1 6-2-69 D.W.F Guardrail Attachment & Wingwall Details.

REVISION 2 10-6-69 E.R.G. Anchor Bolt Spacing

3 3-3-70 W.M.M. ADD. POST DETAILS. & REM. NOTE @ QUA. BOX.

4 General Revision 3/13/70
5 Rev. Additional Qts. 16-Mar-70

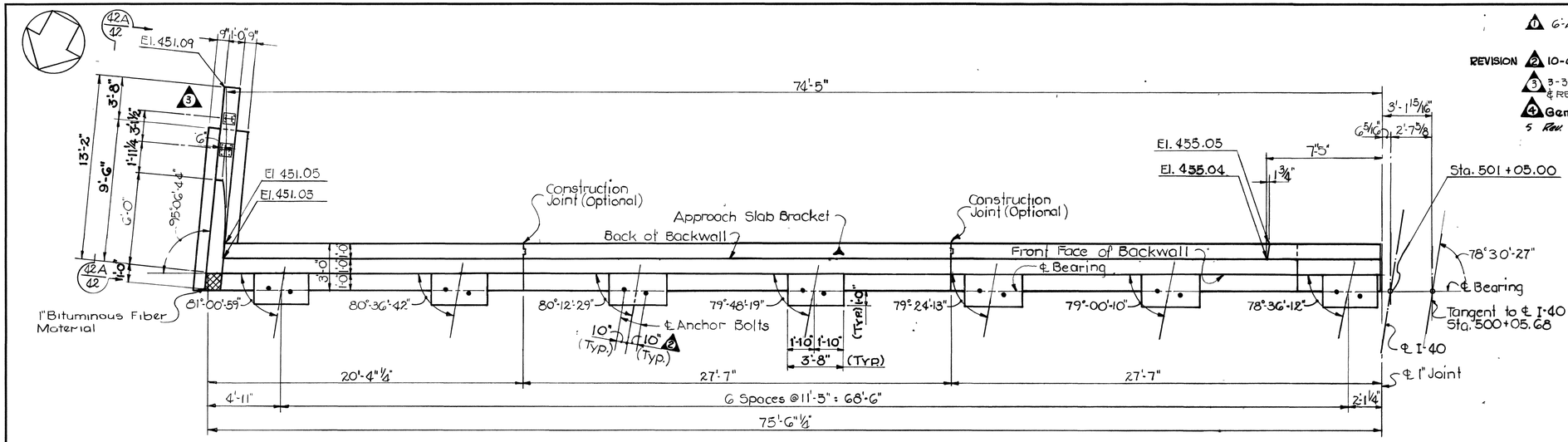

4 PLAN

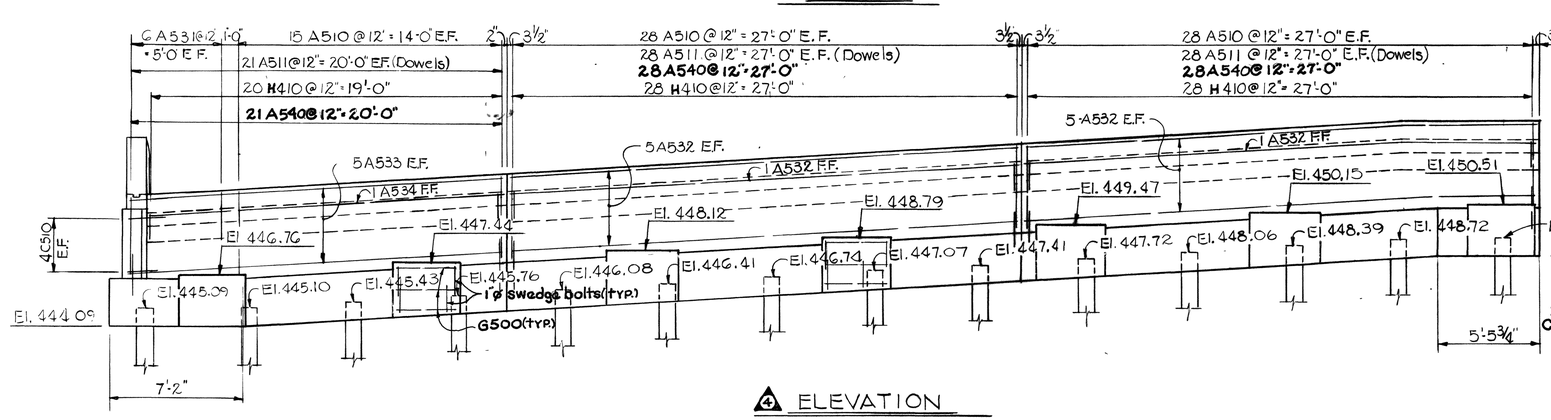

4 ELEVATION

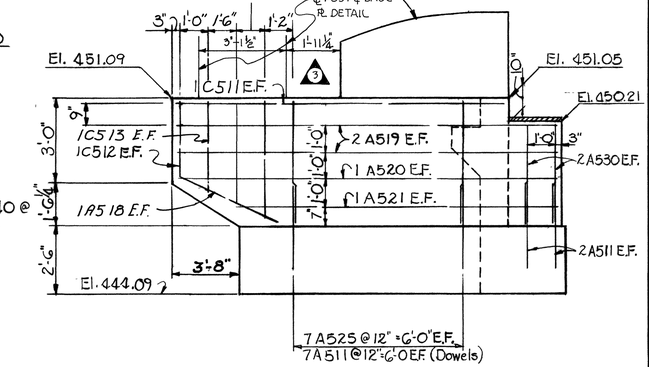

VIEW 42 A

Scale: 3/8" = 1'-0"

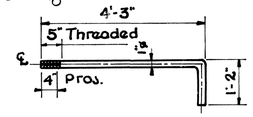

3 SWEDGE BOLT DETAIL

Scale: 1/2" = 1'-0"

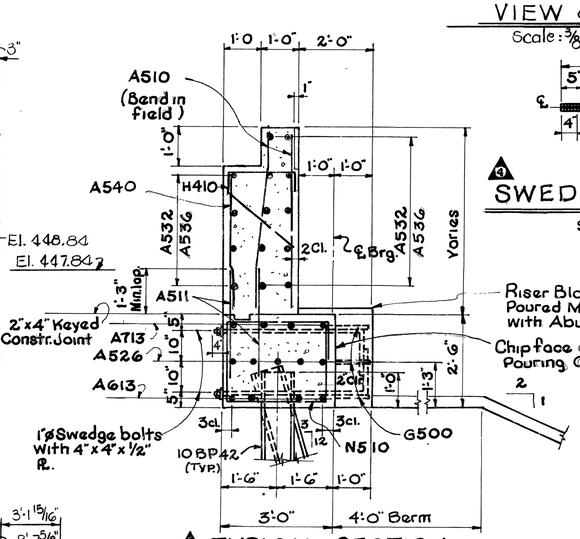

4 TYPICAL SECTION ABUTMENT "B"

Scale: 1/2" = 1'-0"

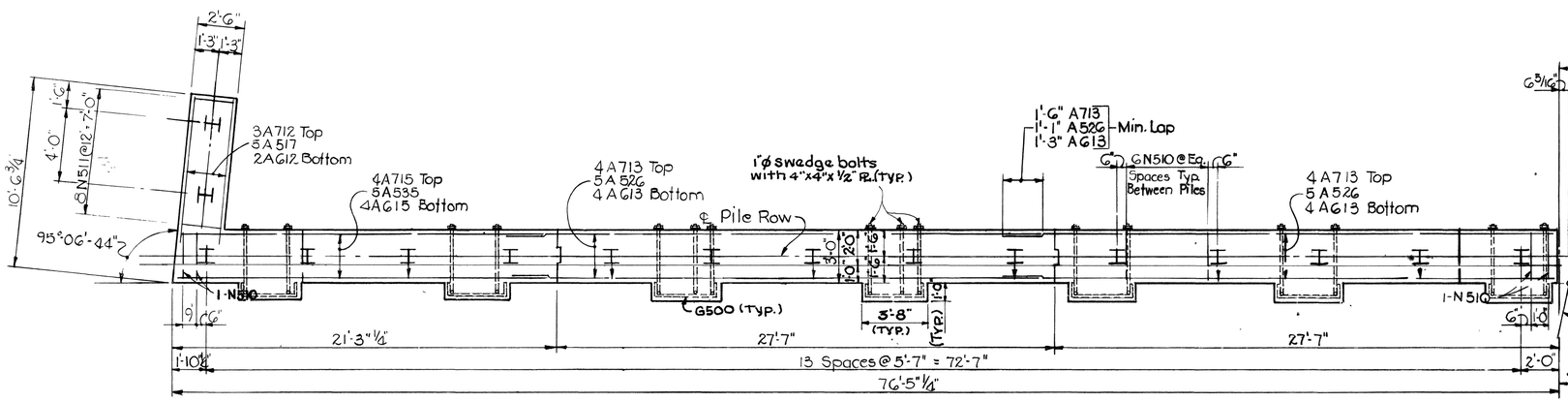

4 FOOTING PLAN ABUTMENT 'B' (N.B.L.)

Scale: 1/4" = 1'-0"

I Indicates Batter Piles Forward 3:12

Note:
When drilling holes for 1" ø swedge bolts, field measurements shall be made to insure clearing piles.

Note:
For Abutment Notes see Drawing K-80-40.

4 * Additional Estimated Quantities

Class 'A' Concrete ... 24.8 Cu. Yds.
Reinforcing Steel ... 1,295 ... Lbs.
56 Req'd 4" x 4" x 1/2" Pl.
56 Req'd 1" ø Hex. Head Nuts
4 56 Req'd 1" ø Swedge bolts
56 Req'd 1" ø Hex Head Lock Nuts
* Quantities Req'd to add 1'-0" to front of Abutment

* ESTIMATED QUANTITIES ABUTMENT 'B' S.B.L. & N.B.L.	
CONCRETE CLASS 'A' C.Y.	REINFORCING STEEL LBS.
89.4	10,250

* Includes Wingpost Quantities

STATE OF TENNESSEE
DEPARTMENT OF HIGHWAYS
NASHVILLE

STRUCTURE NO. 24 AT STA. 500+05.68 I-40
I-40 OVER CHARLOTTE AVENUE
DAVIDSON COUNTY
ABUTMENT 'B' (N.B.L.)

KNOERLE, BENDER, STONE & ASSOCIATES, INC.
NASHVILLE, TENN. BALTIMORE, MD.

CORRECT _____ BRIDGE ENGINEER
APPROVED _____ STATE HIGHWAY ENGINEER

K-80-42

DESIGNED BY	T.L.T.	DATE	6-14-68
DRAWN BY	L.A.L.	DATE	6-14-68
TRACED BY	L.A.L.	DATE	6-14-68
CHECKED BY	D.S.	DATE	10-18-68

FED ROAD DIST NO	STATE	FED AID PROJ NO	FISCAL YEAR	SHEET NO	TOTAL SHEETS
3	TENN	I 40-4 (20) 208	1967	131	360

REVISION
1. 6-2-69 D.W.F. Guardrail Attachment & Wingwall Details.
2. 10-6-69 E.R.G. Anchor Bolt Spacing.
3. 3-3-1970 W.M.M. REV. VIEW 43 & ADD. BASE PL DWG.
4. General Revision 13-March-70

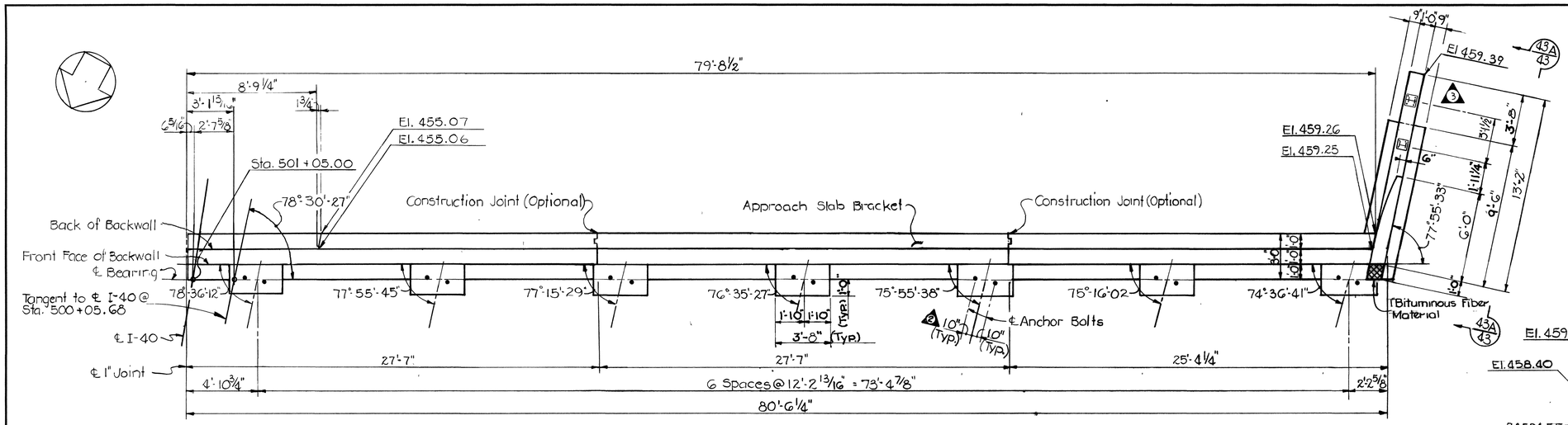

PLAN

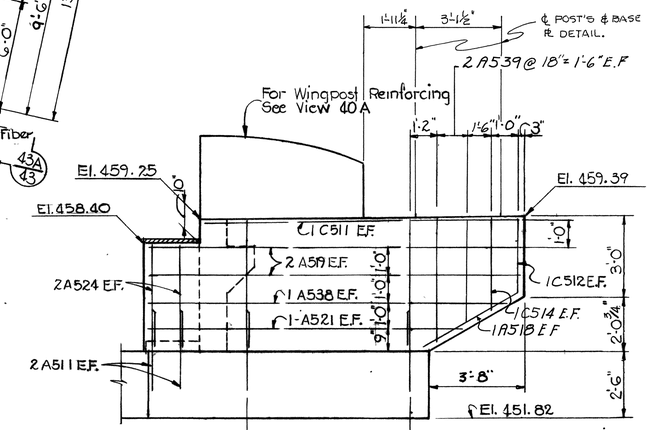

VIEW 43 A

Scale: ⅜" = 1'-0"

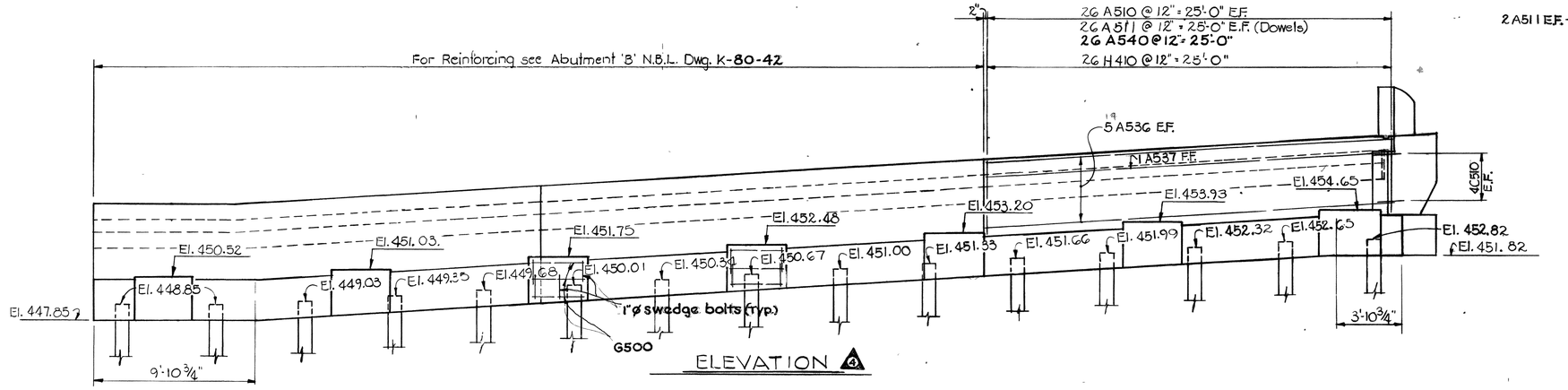

ELEVATION

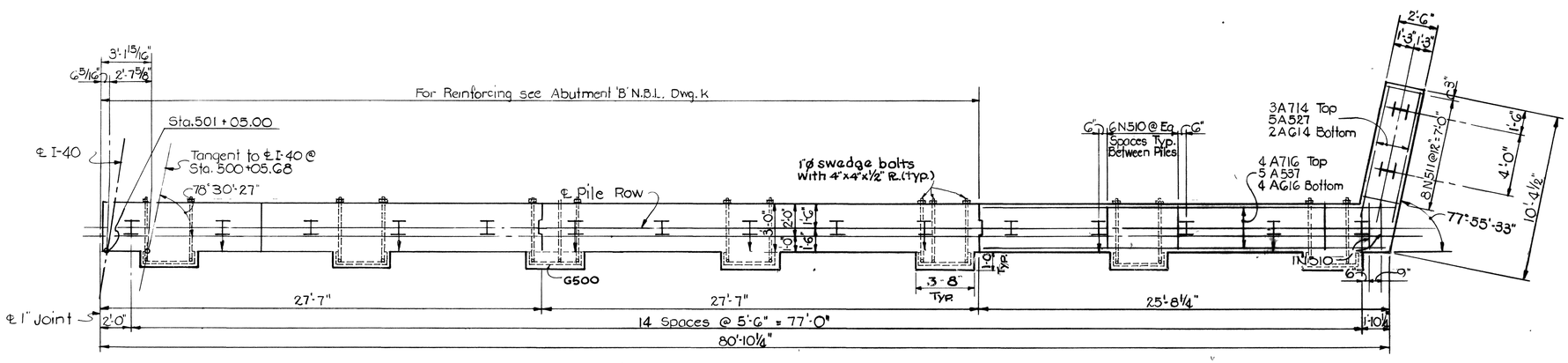

FOOTING PLAN

ABUTMENT 'B' (S.B.L.)

Scale ¼" = 1'-0"

I Indicates Batter Piles Forward 3:12

Note: For Abutment Notes see Drawing K-80-40.

DESIGNED BY	T.L.T.	DATE	6-14-68
DRAWN BY	L.A.I.	DATE	6-14-68
TRACED BY	L.A.I.	DATE	6-14-68
CHECKED BY	D.S.	DATE	10-18-68

STATE OF TENNESSEE
DEPARTMENT OF HIGHWAYS
NASHVILLE

STRUCTURE NO. 24 AT STA. 500+05.68 I-40
I-40 OVER CHARLOTTE AVENUE
DAVIDSON COUNTY
ABUTMENT 'B' (S.B.L.)

KNOERLE, BENDER, STONE & ASSOCIATES, INC.
NASHVILLE, TENN. BALTIMORE, MD.

CORRECT _____ BRIDGE ENGINEER

APPROVED _____ STATE HIGHWAY ENGINEER

K-80-43

FED. ROAD DIST. NO.	STATE	FED. AID PROJ. NO.	FISCAL YEAR	SHEET NO.	TOTAL SHEETS
3	TENN.	I40-4(20)208	1967	132	360

1 6-2-69 Anchor Bolt Projection

REVISION 2 9-26-69 Dimensions on Footing Plan Layout

ANGLES		
GIRDER	℄ BEARING LEG 1	℄ BEARING LEG 2
G1	81°-00'-59"	81°-00'-59"
G2	80°-36'-42"	80°-36'-42"
G3	80°-12'-29"	80°-12'-29"
G4	79°-48'-19"	79°-48'-19"
G5	79°-24'-13"	79°-24'-13"
G6	79°-00'-10"	79°-00'-10"
G7	78°-36'-12"	78°-36'-12"
G8	78°-36'-12"	78°-36'-12"
G9	77°-55'-45"	77°-55'-45"
G10	77°-15'-29"	77°-15'-29"
G11	76°-35'-27"	76°-35'-27"
G12	75°-55'-38"	75°-55'-38"
G13	75°-16'-02"	75°-16'-02"
G14	74°-36'-41"	74°-36'-41"

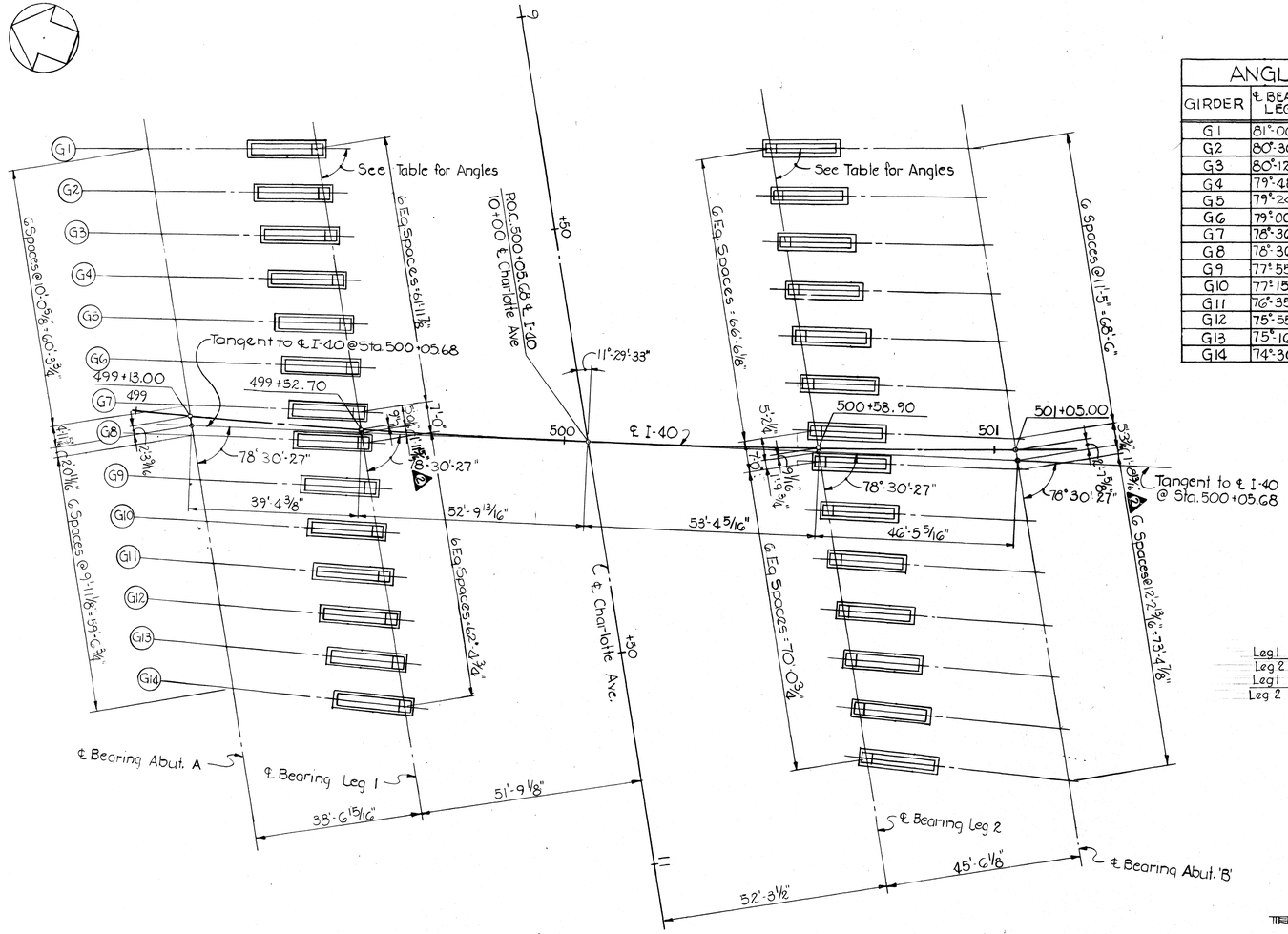

FOOTING LAYOUT PLAN

Scale : 1/16" = 1'-0"

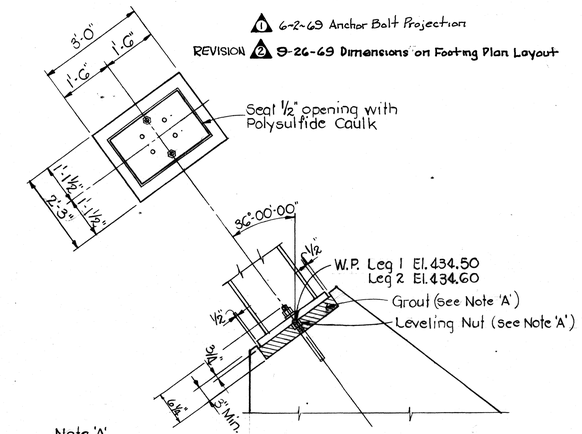

Note 'A'
Used to adjust Base Plate to required elevation. Fill cavity with non-shrinking grout after frame is in place. Grout may be hand packed.

BASE PLATE ERECTION DETAIL

Scale : 1/2" = 1'-0"

Note:
When pouring pedestals provisions shall be made for setting anchor bolts. Bolt projection = 6 1/4" 1

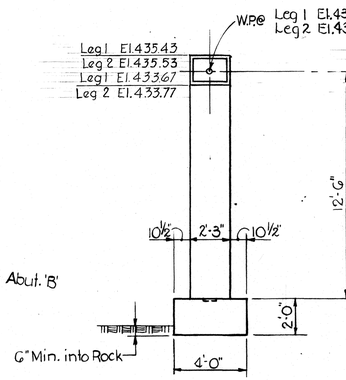

END ELEVATION

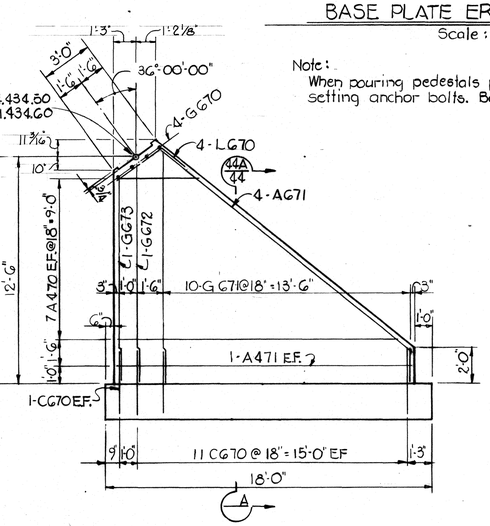

ELEVATION

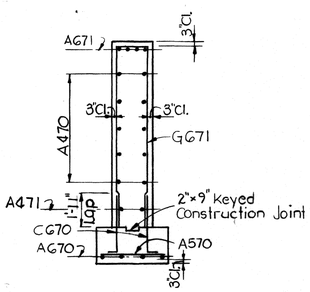

SECTION 44A

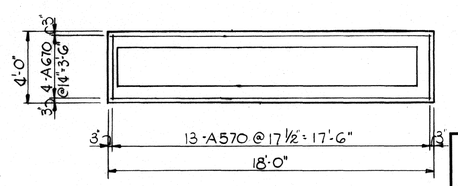

FOOTING PLAN

PEDESTAL DETAILS

Leg 2 Pedestal shown Leg 1 opposite hand
Scale: 1/4" = 1'-0"

ESTIMATED QUANTITIES		
	CONCRETE CLASS 'A' C.Y.	REINFORCING STEEL L.B.S.
Leg #1	236.2	12,650
Leg #2	236.2	12,650

Notes:
For Framing Plan see Dwg K-80-45
For Base Plate Details see Dwg. K-80-46

STATE OF TENNESSEE
DEPARTMENT OF HIGHWAYS
NASHVILLE

STRUCTURE NO. 24 AT STA. 500+05.68 I-40
I-40 OVER CHARLOTTE AVENUE
DAVIDSON COUNTY
FOOTING LAYOUT AND DETAILS

KNOERLE, BENDER, STONE & ASSOCIATES, INC.
NASHVILLE, TENN. BALTIMORE, MD.

CORRECT _____ BRIDGE ENGINEER
APPROVED _____ STATE HIGHWAY ENGINEER

K-80-44

DESIGNED BY	T.L.T.	DATE	5-6-68
DRAWN BY	L.A.I.	DATE	5-20-68
TRACED BY	L.A.I.	DATE	5-20-68
CHECKED BY	D.S.	DATE	10-18-68

FED. ROAD DIST NO.	STATE	FED. AID PROJ. NO.	FISCAL YEAR	SHEET NO.	TOTAL SHEETS
3	TENN.	I 40-4(20)208	1967	133	360

1 9-7-71 D.W.F. Under Bridge Light Mounting Details.

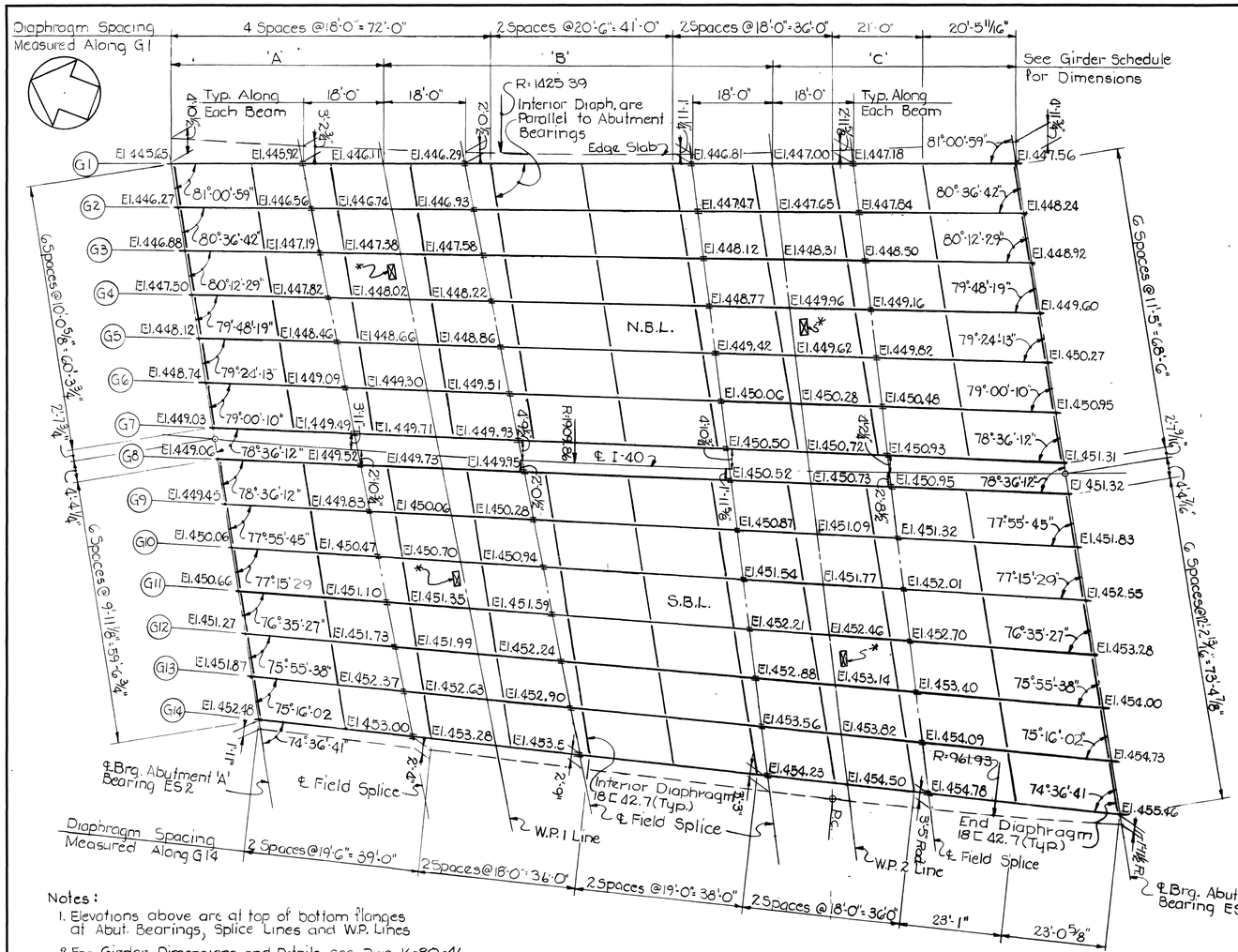

Notes:

1. Elevations above are at top of bottom flanges at Abut. Bearings, Splice Lines and W.P. Lines
2. For Girder Dimensions and Details see Dwg. K-80-46

FRAMING PLAN

Scale: 1/16" = 1'-0"

1 *☒ Denotes Approximate Location for Under bridge Lighting.

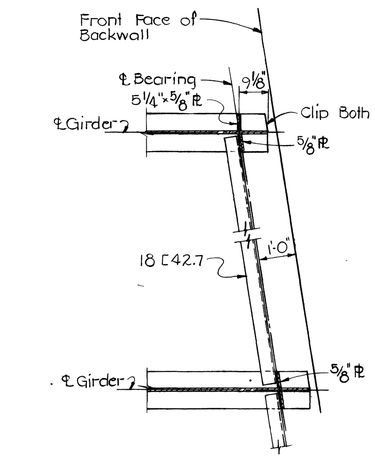

DETAIL AT END DIAPHRAGM

Scale: 1/2" = 1'-0"

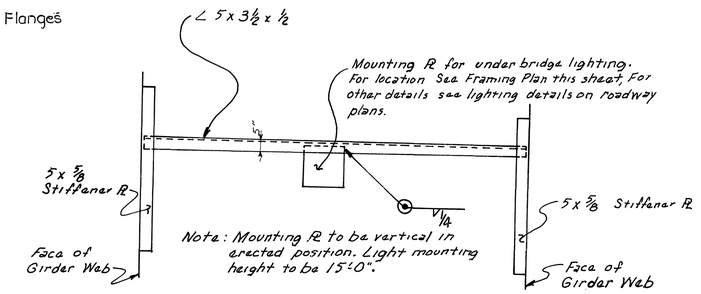

1 ~ SECTION X-X ~

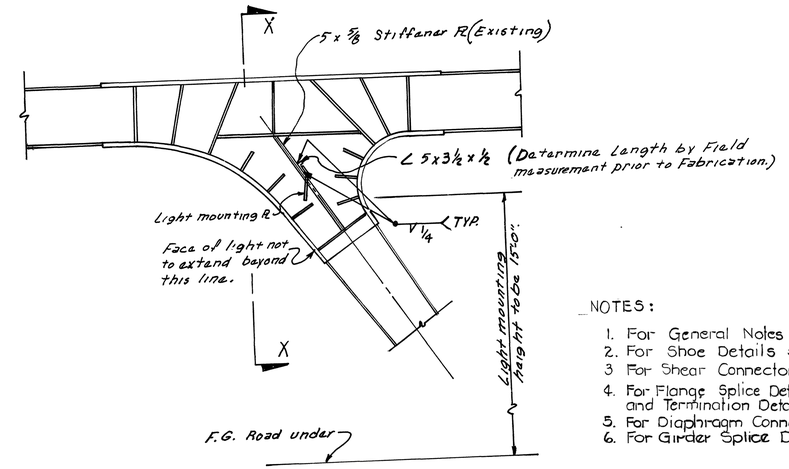

1 ELEVATION

Showing Light Mounting Details

NOTES:

1. For General Notes see Dwg. K-80-39
2. For Shoe Details see Tennessee Standard Dwg K-38-155
3. For Shear Connector Details see Dwg. K-80-2
4. For Flange Splice Details and Cover Plate Welding and Termination Details see Dwg K-80-2
5. For Diaphragm Connection Details see Dwg. K-80-48
6. For Girder Splice Details see Dwg K-80-1

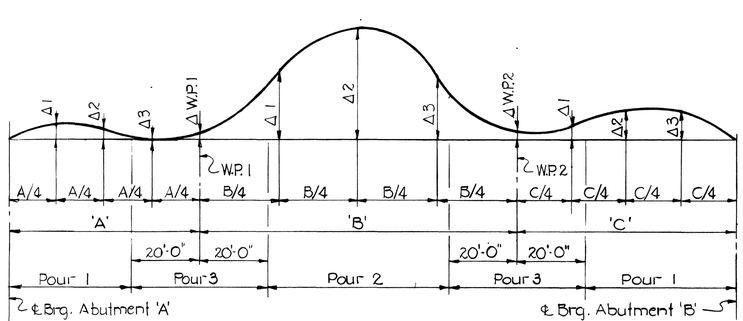

CAMBER DIAGRAM & POURING SEQUENCE

Not to Scale

Note:

1. All pours are to be made in numerical sequence. Pours with the same number designation may be made simultaneously. Dimensions shown for pouring limits are on line parallel to W.P. Lines.
2. The concrete deck shall not be poured until all structural steel is erected and all bolting and welding completed.
3. Field adjustment for camber shall be made by varying the depth of concrete bolster between top of beam and bottom of slab. See schedule for required camber.

DEFLECTION & CAMBER

	A			WP 1	B			WP 2	C		
	1/4 Pt.	1/2 Pt.	3/4 Pt.		1/4 Pt.	1/2 Pt.	3/4 Pt.		1/4 Pt.	1/2 Pt.	3/4 Pt.
	Δ1	Δ2	Δ3		Δ1	Δ2	Δ3		Δ1	Δ2	Δ3
Deflection Due to Weight of Steel	0	0	0	0	1/8"	3/16"	1/8"	0	0	1/16	1/16
Deflection Due to Remaining Dead Load	1/8"	1/8"	0	1/16"	5/8"	1 1/16"	9/16	1/16"	1/8"	1/4"	1/4"
Adjustment Req'd for Vertical Curve	0	0	0	0	0	0	0	0	0	0	0
Camber	1/8"	1/8"	0	1/16	3/4"	1 1/4"	11/16	1/16	1/8"	5/16"	5/16"

ESTIMATED QUANTITIES
STRUCTURAL STEEL LBS.
633,700

STATE OF TENNESSEE
DEPARTMENT OF HIGHWAYS
NASHVILLE

STRUCTURE NO. 24 AT STA. 500+05.68 I-40
I-40 OVER CHARLOTTE AVENUE
DAVIDSON COUNTY
FRAMING PLAN

KNOERLE, BENDER, STONE & ASSOCIATES, INC.
NASHVILLE, TENN. BALTIMORE, MD.

CORRECT _____ BRIDGE ENGINEER
APPROVED _____ STATE HIGHWAY ENGINEER

K-80-45

DESIGNED BY	T.L.T.	DATE	5-6-68
DRAWN BY	L.A.I.	DATE	5-10-68
TRACED BY	L.A.I.	DATE	5-10-68
CHECKED BY	D.S.	DATE	10-18-68

FED. ROAD DIST. NO.	STATE	FED. AID PROJ. NO.	FISCAL YEAR	SHEET NO.	TOTAL SHEETS
3	TENN.	I40-4(20)208	1967	134	360

1 Revision 6-24-69 Frame Legs.

2 Revised 7-3-69 (T.A.U.) Columns realigned.

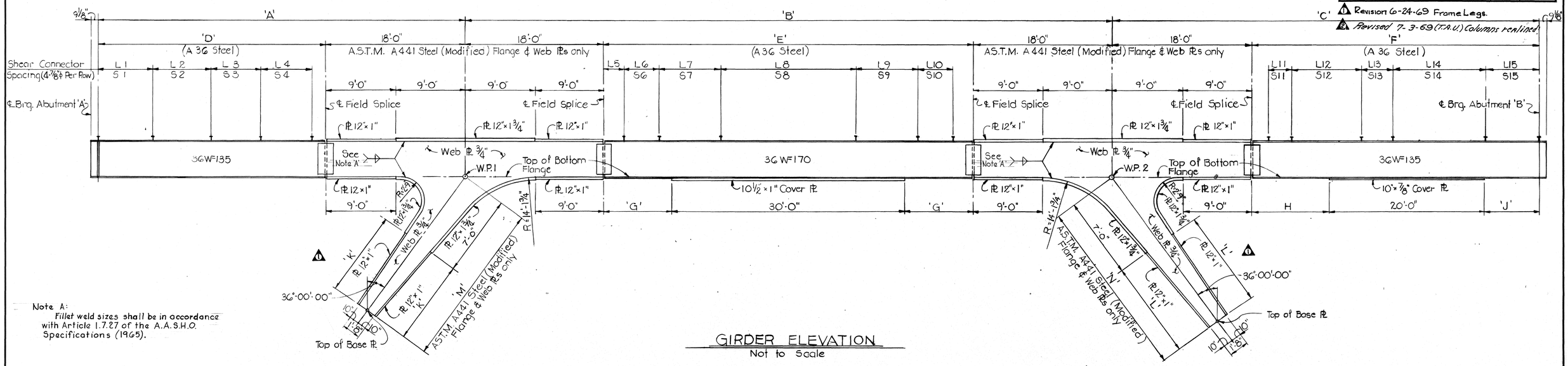

Note A:
Fillet weld sizes shall be in accordance with Article 1.7.27 of the A.A.S.H.O. Specifications (1965).

GIRDER ELEVATION
Not to Scale

Note:
Longitudinal dimensions given are horizontal to top of bottom flange.

GIRDER SCHEDULE

GIRDER	℄ BRG. TO ℄ BRG. ABUT.	A	B	C	D	E	F	G	H	J	K	L	M	N
G1	190'-5 11/16"	47'-5 9/16"	87'-10 5/16"	55'-0 5/16"	29'-5 13/16"	51'-10 5/16"	37'-0 5/16"	10'-11 1/2"	10'-3 3/16"	6'-9 3/4"	7'-2 5/8"	8'-2 3/8"	14'-2 5/8"	15'-2 3/8"
G2	190'-8 9/16"	47'-11 5/16"	87'-1 1/8"	55'-7 1/4"	29'-11 5/16"	51'-1 1/8"	37'-7 1/4"	10'-6 3/16"	10'-5 5/8"	7'-1 5/8"	8'-0 3/8"	9'-0 3/8"	15'-0 1/8"	16'-0 1/8"
G3	190'-11"	48'-6 1/16"	86'-3 5/16"	56'-1 5/8"	30'-6 1/16"	50'-3 5/16"	38'-1 5/8"	10'-1 5/8"	10'-10 3/4"	7'-2 3/8"	8'-9 9/16"	9'-9 7/8"	15'-9 7/16"	16'-9 7/8"
G4	191'-1 7/8"	49'-0 3/16"	85'-5 5/8"	56'-8 1/8"	31'-0 3/16"	49'-5 5/8"	38'-8 1/8"	9'-8 3/16"	11'-2 3/4"	7'-3 1/2"	9'-7 1/8"	10'-7 3/8"	16'-7 1/16"	17'-7 3/16"
G5	191'-4 13/16"	49'-6 3/8"	84'-7 3/4"	57'-2 1/2"	31'-6 3/8"	48'-7 3/4"	39'-2 1/2"	9'-4"	11'-6 3/8"	7'-8 1/8"	10'-4 5/8"	11'-5 1/4"	17'-4 1/2"	18'-5 1/4"
G6	191'-7 7/8"	50'-0 7/16"	83'-10 3/8"	57'-8 5/16"	32'-0 9/16"	47'-10 3/8"	39'-8 5/16"	8'-11 3/16"	11'-10 3/16"	7'-10 3/4"	11'-2"	12'-3"	18'-2"	19'-3"
G7	191'-11 1/16"	50'-4 9/16"	83'-4 11/16"	58'-1 9/16"	32'-4 9/16"	47'-4 11/16"	40'-1 9/16"	8'-8 5/16"	12'-1 1/16"	8'-0 5/8"	11'-8 5/8"	12'-9 3/8"	18'-8 1/16"	19'-9 7/16"
G8	191'-11 1/16"	50'-5"	83'-4 3/8"	58'-1 11/16"	32'-5"	47'-4 3/8"	40'-1 11/16"	8'-8 3/16"	12'-1 3/16"	8'-0 5/8"	11'-8 7/8"	12'-9 3/8"	18'-8 1/16"	19'-9 3/16"
G9	192'-4 11/16"	50'-8 9/16"	83'-1 1/2"	58'-6 1/4"	32'-8 5/16"	47'-1 1/2"	40'-6 1/4"	8'-6 3/4"	12'-3 7/8"	8'-2 3/8"	12'-1 5/8"	13'-3 5/8"	19'-1 1/4"	20'-3 1/8"
G10	192'-10 5/8"	51'-3 3/16"	82'-5 1/4"	59'-1 9/16"	33'-3 3/16"	46'-5 1/4"	41'-1 9/16"	8'-2 5/8"	12'-8 3/16"	8'-5 1/4"	12'-10 7/16"	14'-1 1/4"	19'-10 9/16"	21'-1 1/4"
G11	193'-4 7/8"	51'-10 11/16"	81'-9 1/16"	59'-9 11/16"	33'-10 11/16"	45'-9 1/16"	41'-9 11/16"	7'-10 9/16"	13'-0 11/16"	8'-8 3/4"	13'-0 3/8"	14'-11 3/4"	20'-8 3/16"	21'-11 3/16"
G12	193'-11 1/2"	52'-5 11/16"	81'-1 3/16"	60'-4 5/8"	34'-5 11/16"	45'-1 3/16"	42'-4 5/8"	7'-6 5/8"	13'-5 7/8"	8'-11 1/4"	14'-5 15/16"	15'-9 1/2"	21'-5 9/16"	22'-9 1/2"
G13	194'-6 3/8"	53'-0 3/4"	80'-5 7/16"	61'-0 3/4"	35'-0 3/4"	44'-5 7/16"	43'-0 3/4"	7'-2 3/4"	13'-9 13/16"	9'-2 3/8"	15'-3 3/8"	16'-7 5/8"	22'-3 1/2"	23'-7 5/8"
G14	195'-1 5/8"	53'-7 13/16"	79'-9 7/16"	61'-7 5/16"	35'-7 13/16"	43'-9 7/16"	43'-7 5/16"	6'-10 5/16"	14'-2 9/16"	9'-5"	16'-1 1/16"	17'-5 7/16"	23'-1 11/16"	24'-5 11/16"

STUD SHEAR CONNECTOR SPACING (4-7/8" ϕ Studs Per Row)

GIRDER	L1	S1	L2	S2	L3	S3	L4	S4	L5	L6	S6	L7	S7	L8	S8	L9	S9	L10	S10	L11	S11	L12	S12	L13	S13	L14	S14	L15	S15
G1	7'-0"	14@6"	7'-6	10@9"	6'-5"	7@11"	6'-8"	10@8"	2'-8 1/2"	4'-6"	9@6"	8'-8"	13@8"	20'-10	25@10	8'-0	12@8"	4'-6"	9@6"	3'-0"	6@6"	9'-0	12@9"	4'-0"	4@12	12'-0"	18@8"	7'-0"	14@6"
G2	7'-6	15@6"	7'-6"	10@9"	6'-5"	7@11"	6'-8"	10@8"	2'-8 1/2"	4'-6"	9@6"	8'-8"	13@8"	20'-0"	24@10	8'-0"	12@8"	4'-6"	9@6"	3'-6"	7@6"	9'-0	12@9"	4'-0"	4@12	12'-0"	18@8"	7'-0"	14@6"
G3	7'-0"	14@6"	6'-9	9@9"	8'-3"	9@11"	6'-8"	10@8"	2'-8 3/8"	4'-6"	9@6"	8'-8"	13@8"	19'-2"	23@10	8'-0"	12@8"	4'-6"	9@6"	3'-6"	7@6"	9'-0"	12@9"	4'-0"	4@12	12'-0"	18@8"	7'-6	15@6"
G4	7'-0"	14@6"	7'-6"	10@9"	7'-4"	8@11"	7'-4"	11@8"	2'-8 3/4"	4'-6"	9@6"	8'-8"	13@8"	18'-4	22@10	8'-0"	12@8"	4'-6"	9@6"	3'-6"	7@6"	9'-0"	12@9"	4'-0"	4@12"	12'-8"	19@8"	7'-6"	15@6"
G5	7'-6"	15@6"	7'-6"	10@9"	7'-4"	8@11"	7'-4"	11@8"	2'-8"	4'-6"	9@6"	8'-0"	12@8"	18'-4"	22@10"	8'-0"	12@8"	4'-6"	9@6"	3'-6"	7@6"	9'-0"	12@9"	4'-0"	4@12"	12'-8"	19@8"	8'-0"	16@6"
G6	8'-0"	6@6"	7'-6"	10@9"	7'-4"	8@11"	7'-4"	11@8"	2'-8 1/8"	4'-6"	9@6"	8'-0"	12@8"	17'-6"	21@10	8'-0"	12@8"	4'-6"	9@6"	3'-6"	7@6"	9'-9"	13@9"	4'-0"	4@12"	12'-8	19@8"	8'-0"	16@6"
G7	7'-6"	15@6"	7'-6"	10@9"	7'-4"	8@11"	8'-0"	12@8"	2'-8 3/4"	4'-6"	9@6"	8'-0"	12@8"	17'-6"	21@10	8'-0"	12@8"	4'-0"	8@6"	4'-0"	8@6"	9'-9"	13@9"	4'-0"	4@12"	12'-0"	18@8"	8'-6"	17@6"
G8	7'-6"	15@6"	7'-6"	10@9"	7'-4"	8@11"	8'-0"	12@8"	2'-8 1/4"	4'-6"	9@6"	8'-0"	12@8"	17'-6"	21@10	8'-0"	12@8"	4'-0"	8@6"	4'-0"	8@6"	9'-9"	13@9"	4'-0"	4@12"	12'-0"	18@8"	8'-6"	17@6"
G9	8'-0"	16@6"	7'-6"	10@9"	7'-4"	8@11"	8'-0"	12@8"	2'-9 3/4"	4'-0"	8@6"	8'-0"	12@8"	17'-6"	21@10	8'-0"	12@8"	4'-0"	8@6"	4'-0"	8@6"	9'-0"	12@9"	5'-0"	5@12"	12'-0"	18@8"	8'-6"	17@6"
G10	7'-6	15@6"	7'-6"	10@9"	8'-3"	9@11"	8'-0"	12@8"	2'-8 3/4"	4'-0	8@6"	8'-0"	12@8"	17'-6"	21@10	8'-0"	12@8"	3'-6	7@6"	4'-0"	8@6"	9'-0"	12@9"	5'-0"	5@12"	12'-8"	19@8"	8'-6"	17@6"
G11	7'-6	15@6"	7'-6"	10@9"	8'-3"	9@11"	8'-8"	13@8"	2'-7 5/8"	3'-6"	7@6"	8'-0"	12@8"	17'-6"	21@10	8'-0"	12@8"	3'-6"	7@6"	4'-0"	8@6"	9'-9"	13@9"	5'-0"	5@12"	12'-8"	19@8"	8'-6"	17@6"
G12	8'-0"	16@6"	7'-6"	10@9"	8'-3"	9@11"	8'-8"	13@8"	2'-7 5/8"	3'-6"	7@6"	8'-0"	12@8"	17'-6"	21@10	7'-4"	11@8"	3'-6"	7@6"	4'-6"	9@6"	9'-9"	13@9"	5'-0"	5@12"	12'-8	19@8"	8'-6"	17@6"
G13	8'-6"	17@6"	8'-3"	11@9"	8'-3"	9@11"	8'-0"	12@8"	2'-7 3/4"	3'-6	7@6"	7'-4"	11@8"	17'-6"	21@10	7'-4"	11@8"	3'-6"	7@6"	4'-6"	9@6"	9'-9"	13@9"	5'-0"	5@12"	12'-8"	19@8"	9'-0"	18@6"
G14	8'-6"	17@6"	8'-3"	11@9"	8'-3"	9@11"	8'-8"	13@8"	2'-8"	3'-6"	7@6"	7'-4"	11@8"	17'-6"	21@10	6'-8"	10@8"	3'-6"	7@6"	4'-6"	9@6"	10'-6"	14@9"	5'-0"	5@12"	12'-8"	19@8"	9'-0"	18@6"

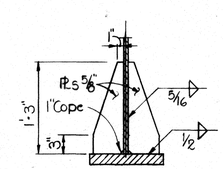

SECTION 46B
Scale: 1"=1'-0"

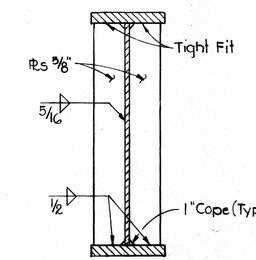

SECTION 46C
Scale: 1"=1'-0"

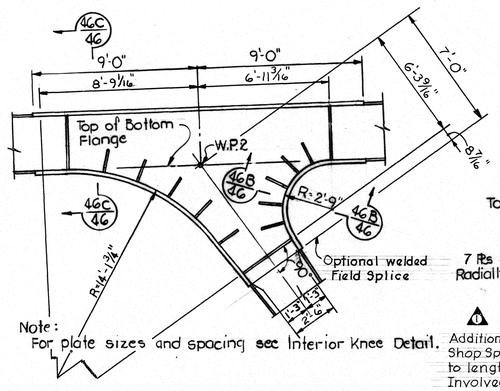

Note:
For plate sizes and spacing see Interior Knee Detail.

FASCIA GIRDER KNEE DETAIL
THIS DETAIL ONLY APPLIES TO OUTSIDE OF FASCIA GIRDER
Scale: 1/4"=1'-0"

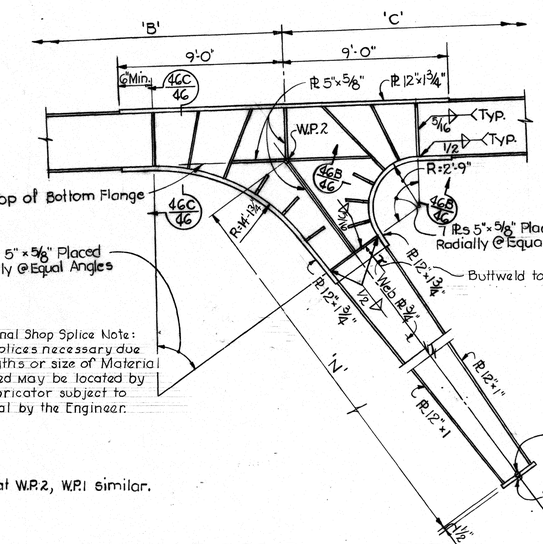

7 Pls 5" × 5/8" Placed Radially @ Equal Angles

1 Additional Shop Splice Note: Shop Splices necessary due to lengths or size of Material Involved may be located by the fabricator subject to approval by the Engineer.

Note:
Knee details are shown at W.P.2, W.P.1 similar.

INTERIOR GIRDER KNEE DETAIL
THIS DETAIL ALSO APPLIES TO INSIDE OF FASCIA GIRDER
Scale: 1/4"=1'-0"

Note: Field connections shall be 7/8" ϕ High Tensile Strength Bolts ASTM-A325 unless otherwise shown. See AASHO Specifications Art. 2-10-20. All field connections are friction type.

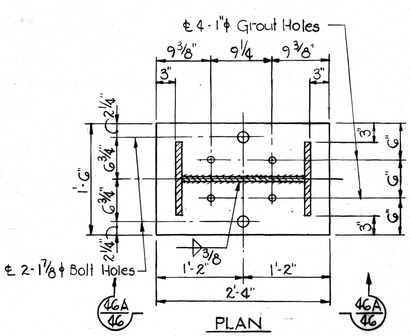

PLAN

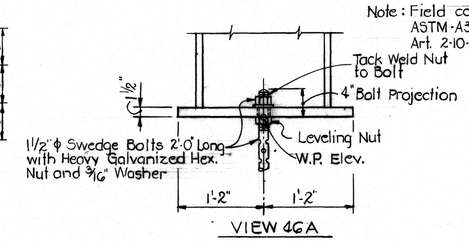

VIEW 46A

BASE PLATE DETAIL
Scale: 1"=1'-0"

STATE OF TENNESSEE
DEPARTMENT OF HIGHWAYS
NASHVILLE

STRUCTURE NO. 24 AT STA. 500+05.68 I-40
I-40 OVER CHARLOTTE AVENUE.
DAVIDSON COUNTY
GIRDER DETAILS

KNOERLE, BENDER, STONE & ASSOCIATES, INC.
NASHVILLE, TENN. BALTIMORE, MD.

CORRECT _____ BRIDGE ENGINEER
APPROVED _____ STATE HIGHWAY ENGINEER

K-80-46

DESIGNED BY T.L.T. DATE 5-6-68
DRAWN BY L.A.I. DATE 5-17-68
TRACED BY L.A.I. DATE 5-17-68
CHECKED BY D.S. DATE 10-18-68

MICROFILMED

FED ROAD DIST. NO	STATE	FED AID PROJ. NO	FISCAL YEAR	SHEET NO.	TOTAL SHEETS
3	TENN	I 40-4(20)208	1967	135	360

1 8-2-71 CFC Revised Median Barrier Detail

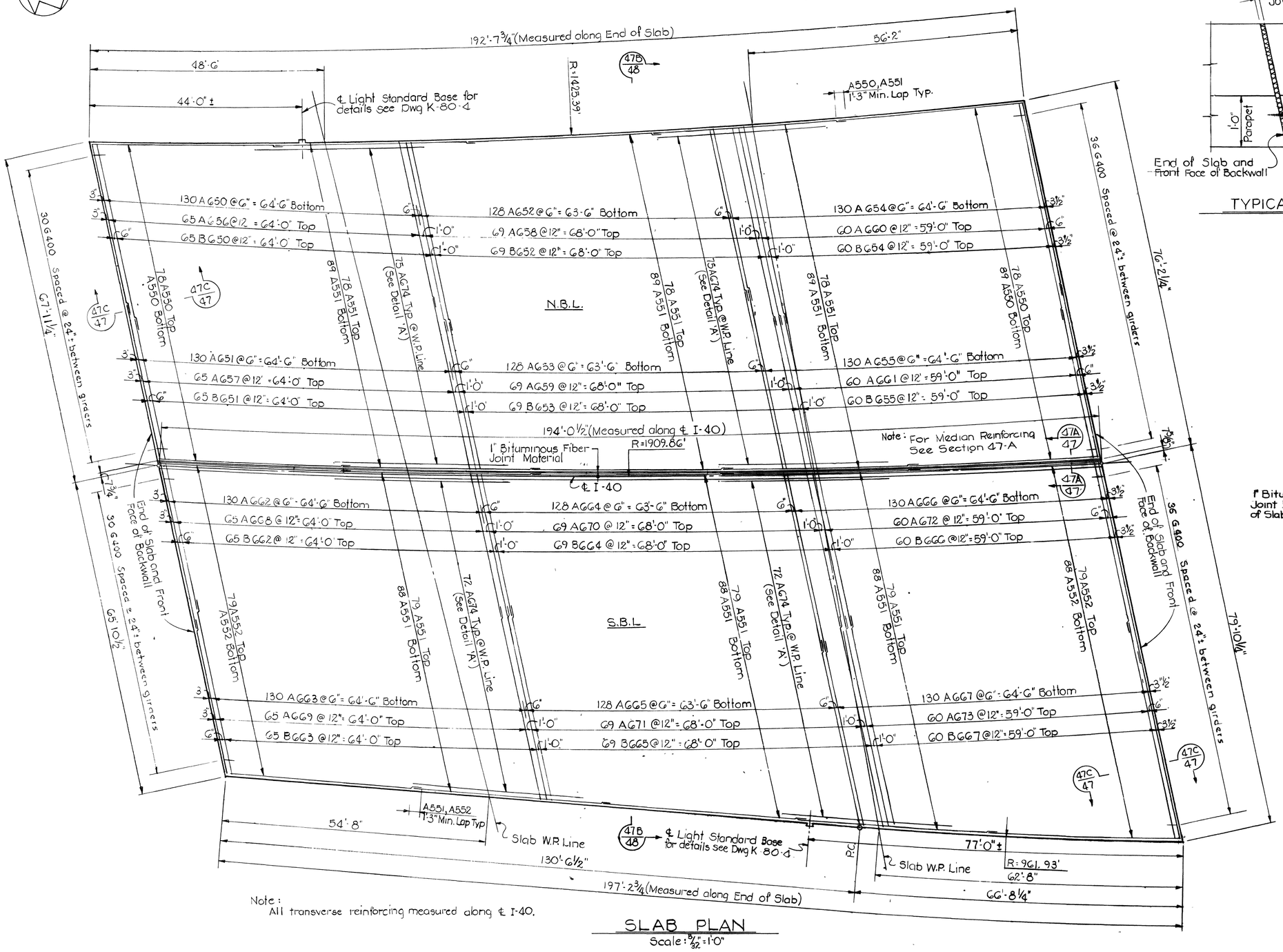

Note:
All transverse reinforcing measured along ℄ I-40.

SLAB PLAN
Scale: 5/32" = 1'-0"

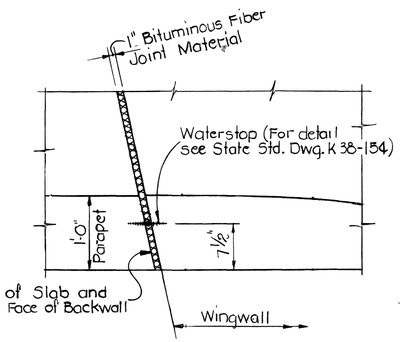

TYPICAL CORNER DETAIL
Scale: 1" = 1'-0"

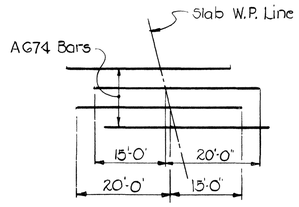

DETAIL 'A'
Not to Scale

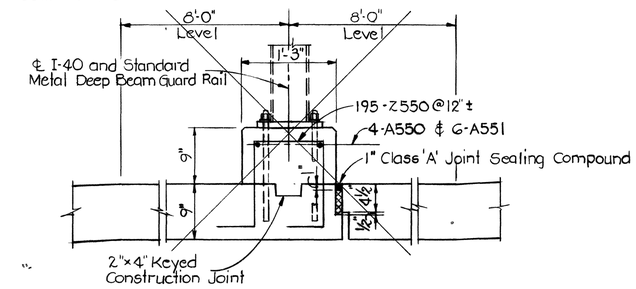

SECTION 47 A
Scale: 1" = 1'-0"

1 See Reinforced Concrete Median Barrier Detail, Dwg. K-80-48.

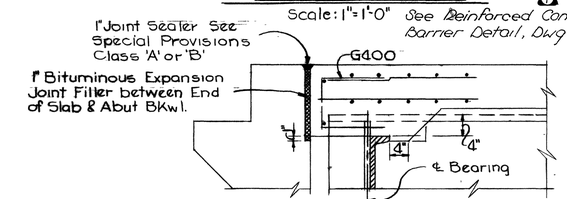

SECTION 47C
Scale: ¾" = 1'-0"

Notes:
1. For Cross Sections see Dwg. K-80-48
2. When pouring deck slab, provisions shall be made for setting reinforcing steel for concrete parapet. See Tenn. Std Dwg. K-38-154.
3. Bridge Rail to conform to horizontal curve.

ESTIMATED QUANTITIES	
CONCRETE CLASS 'A' C.Y.	REINFORCING STEEL L.BS.
803.4	246,850

STATE OF TENNESSEE
DEPARTMENT OF HIGHWAYS
NASHVILLE

STRUCTURE NO. 24 AT STA. 500+05.68 I-40
I-40 OVER CHARLOTTE AVENUE
DAVIDSON COUNTY
SLAB PLAN

KNOERLE, BENDER, STONE & ASSOCIATES, INC.
NASHVILLE, TENN. BALTIMORE, MD.

CORRECT _____ BRIDGE ENGINEER
APPROVED _____ STATE HIGHWAY ENGINEER

K-80-47

DESIGNED BY	T.L.T.	DATE	5-7-68
DRAWN BY	L.A.I.	DATE	5-27-68
TRACED BY	L.A.I.	DATE	5-27-68
CHECKED BY	D.S.	DATE	10-18-68

1 8-2-71 CEC Added Reinf. Conc. Med Barrier Details

FED. ROAD DIST. NO	STATE	FED. AID PROJ. NO	FISCAL YEAR	SHEET NO.	TOTAL SHEETS
3	TENN.	I 40-4(20)208	1967	136	360

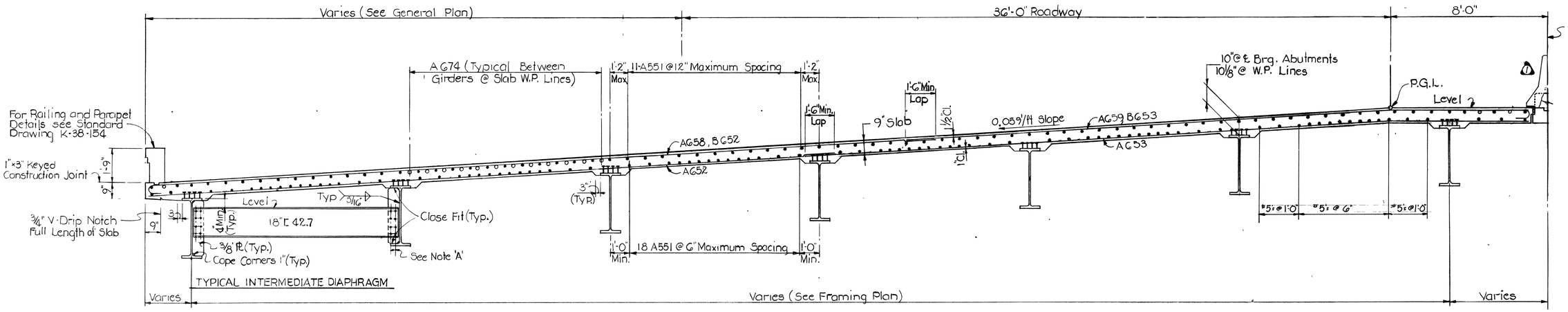

SECTION 47 B

Scale : 3/8" = 1'-0"

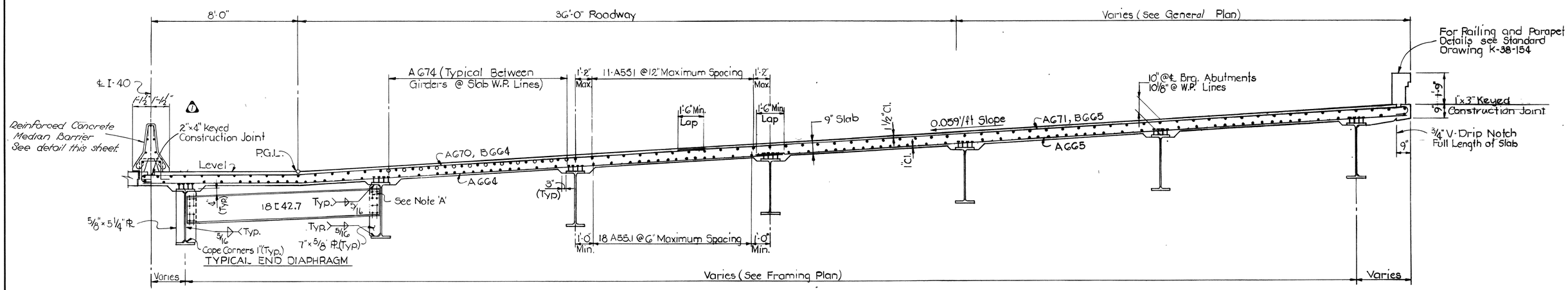

Note 'A'

Field connections shall be 7/8" ϕ high tensile strength bolts ASTM A325, unless otherwise shown. See A.A.S.H.O. Specifications Article 2.10.20. All high strength bolted connections are friction type.

SECTION 47 B

Scale : 3/8" = 1'-0"

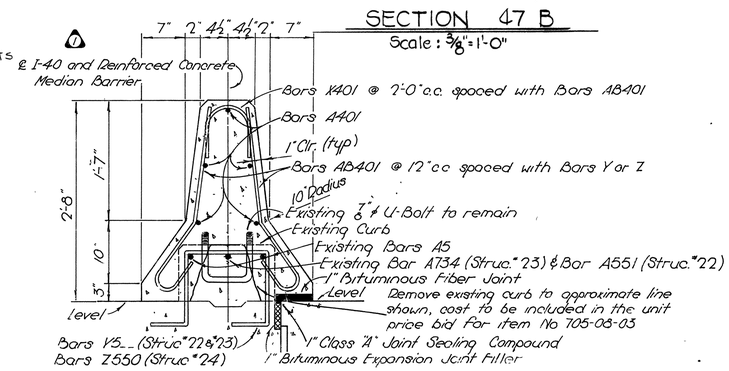

REINFORCED CONCRETE MEDIAN BARRIER DETAIL (Showing Longitudinal Construction Joint)

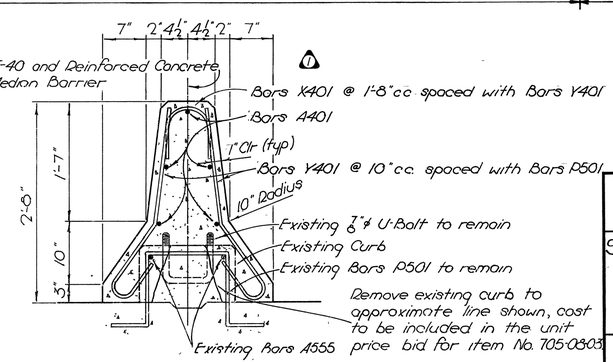

REINFORCED CONCRETE MEDIAN BARRIER DETAIL

STATE OF TENNESSEE
DEPARTMENT OF HIGHWAYS
NASHVILLE

STRUCTURE NO. 24 AT STA. 500+05.68 I-40
I-40 OVER CHARLOTTE AVENUE
DAVIDSON COUNTY
SLAB SECTION

KNOERLE, BENDER, STONE & ASSOCIATES, INC.
NASHVILLE, TENN. BALTIMORE, MD.

CORRECT _____ BRIDGE ENGINEER
APPROVED _____ STATE HIGHWAY ENGINEER

K-80-18

DESIGNED BY	T.L.T.	DATE	5-7-68
DRAWN BY	L.A.I.	DATE	5-29-68
TRACED BY	L.A.I.	DATE	5-29-68
CHECKED BY	D.S.	DATE	10-18-68

FED ROAD DIST. NO.	STATE	FED. AID PROJ. NO.	FISCAL YEAR	SHEET NO.	TOTAL SHEETS
3	TENN.	I40-4(20)208	1967	137	360

SLABS

MARK	BAR	NUMBER		SIZE	LENGTH	BENDING DIMENSIONS a	b	c	d	e	f	LOCATION
A550	A	338		5	39'-3"							Slab/Median
A551	A	1002		5	40'-0"							"
A552	A	334		5	40'-10"							Slab
AG50	A	130		6	34'-6 to 36'-3 (26 Ea V.B 5¼")							Slab
AG51	A	130		6	32'-10 to 37'-2 (26 Ea V.B 13")							"
AG52	A	128		6	34'-6 to 35'-10 (32 Ea V.B 5¼")							"
AG53	A	128		6	37'-2 to 38'-6 (32 Ea. V.B. 3¼")							"
AG54	A	130		6	35'-10 to 40'-0 (26 Ea. V.B. 10")							"
AG55	A	130		6	37'-4 to 38'-0 (26 Ea V.B 2")							"
AG56	A	65		6	39'-9 to 41'-0 (13 Ea V.B. 5¼")							"
AG57	A	65		6	27'-9 to 32'-0 (13 Ea V.B 10¼")							"
AG58	A	69		6	39'-9 to 42'-4 (23 Ea V.B 1 3/2")							"
AG59	A	69		6	32'-0 to 32'-10 (23 Ea V.B 5")							"
AG60	A	60		6	42'-4 to 45'-9 (12 Ea V.B. 10¼")							"
AG61	A	60		6	31'-8 to 32'-10 (12 Ea V.B 3½")							"
AG62	A	130		6	35'-10"							"
AG63	A	130		6	32'-4 to 35'-8 (26 Ea. V.B. 10")							"
AG64	A	128		6	35'-8 to 38'-0 (32 Ea V.B 9¼")							"
AG65	A	128		6	35'-8 to 39'-0 (32 Ea V.B 11¼")							"
AG66	A	130		6	38'-0 to 42'-5 (26 Ea V.B. 1' 1¼")							"
AG67	A	130		6	39'-0 to 40'-0 (26 Ea. V.B 3")							"
AG68	A	65		6	30'-8"							"
AG69	A	65		6	37'-8 to 41'-0" (13 Ea. V.B. 10")							"
AG70	A	69		6	30'-6 to 32'-6 (23 Ea V.B 10")							"
AG71	A	69		6	42'-6 to 45'-0 (23 Ea V.B 1' 3")							"
AG72	A	60		6	32'-6 to 36'-4 (12 Ea V.B 11½")							"
AG73	A	60		6	45'-0 to 46'-0 (12 Ea V.B 3")							"
AG74	A	294		6	35'-0"							"
BG50	B	65		6	40'-9 to 42'-0" (13 Ea V.B 5¼") ← 39'-9 to 41'-0" (13 Ea V.B 5¼")							Slab
BG51	B	65		6	28'-9 to 33'-0 (13 Ea V.B 10¾")							"
BG52	B	69		6	40'-9 to 43'-4 (23 Ea V.B 1' 3½") ← 39'-9 to 42'-4 (23 Ea. V.B 1' 3½")							"
BG53	B	69		6	33'-0 to 33'-10 (23 Ea. V.B 5") ← 32'-0 to 32'-10 (23 Ea. V.B. 5")							"
BG54	B	60		6	43'-4 to 46'-9 (12 Ea. V.B. 10¼") ← 42'-4 to 45'-9 (12 Ea V.B 10¼")							"
BG55	B	60		6	32'-8 to 33'-10 (12 Ea V.B 3½") ← 31'-8 to 32'-10 (12 Ea. V.B 3½")							"
BG62	B	65		6	31'-4"	30'-8"						"
BG63	B	65		6	38'-8 to 42'-0" (13 Ea V.B 10") ← 37'-8 to 41'-0" (13 Ea V.B 10")							"
BG64	B	69		6	31'-6 to 33'-6 (23 Ea V B 1'-0") ← 30'-6 to 32'-6 (23 Ea. V.B 1'-0")							"
BG65	B	69		6	43'-6 to 46'-0 (23 Ea V.B 1' 3") ← 42'-6 to 46'-0 (23 Ea V.B 1' 3")							"
BG66	B	60		6	33'-6 to 37'-4 (12 Ea V.B 11½") ← 32'-6 to 36'-4 (12 Ea. V.B 11½")							"
BG67	B	60		6	46'-0 to 47'-0 (12 Ea V.B 3") ← 45'-0 to 46'-0 (12 Ea V.B 3")							" △7
GD00	G	132		4	3'-4"	1'-3"	10"					
ZS50	Z	195		5	4'-3"	1'-2"	11"	1'-2"	6"	6"		Median
			△5		REINFORCED CONCRETE MEDIAN BARRIER							
A401	A	25		4	39'-7"							Median Barrier
AB401	AB	195		4	2'-6"	1'-0"	1'-0"					" "
X401	X	98		4	2'-2"	8½"	11"	8½"	3½"	7"		Median Barrier
												Wingwall & Ftg

PEDESTALS

MARK	BAR	NUMBER					SIZE	LENGTH	BENDING DIMENSIONS a	b	c	d	e	f	LOCATION
A470	A	392					4	4'-4 to 15'-4 (2 Ea V.B. 1'-10")							Pedestal
A471	A	56					4	16'-0"							"
A570	A	364					5	3'-6"							Footing
AG70	A	112					6	17'-6"							Footing
AG71	A	112					6	18'-0"							Pedestal
CG70	C	672					6	4'-5"	3'-6"	11"					Footing
GG70	G	112					6	3'-9"	1'-0"	1'-9"					Pedestal
GG71	G	280					6	5'-5 to 27'-5" (1 Ea. V.B. 2'-5¼")		1'-9"					"
								1'-10 to 12'-10" (1 Ea. V.B 1'-2⅝")							
GG72	G	28					6	26'-3"	12'-3"	1'-9"					"
GG73	G	28					6	24'-9"	11'-6"	1'-9"					"
LG70	L	112					6	4'-0"	2'-6"	1'-6"	1'-2"	11⅛"			Pedestal

ABUTMENTS

MARK	BAR	NUMBER ABUT A SBL	ABUT A NBL	ABUT B SBL	ABUT B NBL	SIZE	LENGTH	BENDING DIMENSIONS a	b	c	d	e	f	LOCATION
A401	A	2	2	2	2	4	3'-0"							Wingpost
A402	A	2	2	2	2	4	3'-3"							"
A403	A	2	2	2	2	4	3'-6"							"
A404	A	2	2	2	2	4	3'-8"							" △1
A405	A	6	6	6	6	4	3'-10"							"
A406	A	6	6	6	6	4	5'-8"							"
A510	A	134	122	178	142	5	4'-7"							Wingwall & Bkwl.
A511	A	152	154	182	172	5	3'-0"							"
A512	A	10	1			5	28'-6"							Backwall
A513	A	11	11			5	37'-3"							Bkwl.
A514	A	1				5	27'-0"							
A515	A	5	10			5	29'-3"							Bkwl. & Footing
A516	A	5	5			5	39'-6"							Footing
A517	A	5		5		5	7'-9"							"
A518	A	2	2	2	2	5	4'-7"							Wingwall
A519	A	4	4	4	4	5	14'-10"							Wingwall
A520	A	2	2		2	5	14'-8"							"
A521	A	2	2	2	2	5	12'-6"							"
A522	A	4	4			5	3'-4" & 3'-8" (4 Ea Length)							"
A523	A	14				5	4'-6"							"
A524	A	4		4		5	3'-10"							"
A525	A		14		14	5	4'-4"							Wingwall & Bkwl.
A526	A		5	10	10	5	29'-9"							Footing
A527	A		5	5		5	8'-6"							"
A528	A				4	5	3'-6" & 4'-0" (4 Ea Length)							Wingwall
A529	A		14			5	4'-2"							"
A530	A		4		4	5	3'-6"							"
A531	A				12	5	4'-3"							Backwall
△2 A532	A			28	28	5	27'-3"							"
△2 A533	A				8	5	19'-10"							"
A534	A				1	5	18'-10"							"
A535	A				5	5	19'-4"							Footing
△2 A536	A			13		5	25'-2"							Backwall
A537	A			6		5	24'-6"							Bkwl. & Footing
A538	A			2		5	14'-4"							Wingwall
△1 A539	A			4		5	3'-9" & 4'-5" (2 Ea. Length)							"
△3 A540	A			82	77	5	3'-7"							Backwall

ABUTMENTS

MARK	BAR	NUMBER ABUT A SBL	ABUT A NBL	ABUT B SBL	ABUT B NBL	SIZE	LENGTH	BENDING DIMENSIONS a	b	c	d	e	f	LOCATION
AG10	A	4				6	29'-3"							Footing
AG11	A	4	4			6	39'-9"							"
AG12	A	2		2	6		7'-9"							"
AG13	A		4	8	8	6	29'-9"							"
AG14	A		2	2		6	8'-6"							"
AG15	A				4	6	20'-4"							"
AG16	A			4		6	25'-4"							"
A710	A	4				7	29'-3"							Footing
A711	A	4	4			7	40'-0"							"
A712	A	3			3	7	7'-9"							"
A713	A		4	8		7	29'-9"							"
A714	A		3	3		7	8'-6"							"
A715	A				4	7	20'-4"							"
A716	A			4		7	25'-4"							"
C510	C	8	8	8	8	5	2'-0"	1'-6"	0'-6"					Backwall
H410	H	66	67	82	76	4	5'-0"	0'-6"	1'-8"	0'-6"	2'-4"	1'-7¾"	1'-7¾"	Backwall
△6 G500	G			21	21	5	5'-0"	0'-10"	3'-4"					Riser Block
L510	L		2			5	7'-7"	5'-0"	2'-7"	0'-8"	2'-7"			Wingwall
L511	L	2			2	5	7'-7"	5'-0"	2'-7"	0'-10"	2'-6"			"
L512	L			2		5	7'-10"	5'-3"	2'-7"	1'-0"	2'-5"			"
N510	N	63	64	88	82	5	9'-8"	2'-6"	2'-1"	0'-6"				Footing
N511	N	8	8	8	8	5	8'-8"	2'-0"	2'-1"	0'-6"				"
C511	C	2	2	2	2	5	13'-5"	12'-10"	8"					Wingwall
C512	C	2	2	2	2	5	3'-3"	2'-8"	8"					"
C513	C	2	2		2	5	3'-6"	2'-11"	8"					"
C514	C			2		5	3'-8"	3'-1"	8"					"

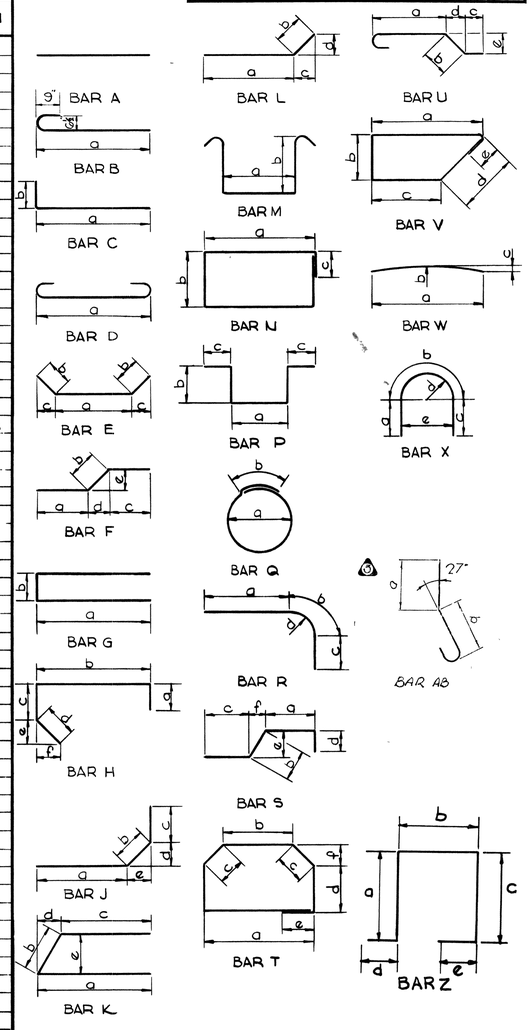

NOTES:
1. Reinforcing steel detailed as per Manual of Standard Practice for Reinforced Concrete Structures A.C.I.

△1 6-2-69 D.W.F. Wingwall Reinforcement Revisions

△2 3-10-70 R.M.D. Abutment Reinforcement Revisions

△3 8-2-71 CEC—Added Reinf. Conc Med Barrier

DESIGNED BY T.L.T. DATE 6-11-68
DRAWN BY T.A.L. DATE 6-11-68
TRACED BY J.C.R. DATE 6-11-68
CHECKED BY D.S. DATE 10-18-68

STATE OF TENNESSEE
DEPARTMENT OF HIGHWAYS
NASHVILLE

STRUCTURE NO. 24 AT STA. 500+05.68 I-40
I-40 OVER CHARLOTTE AVENUE
DAVIDSON COUNTY
REINFORCING STEEL SCHEDULE

KNOERLE, BENDER, STONE & ASSOCIATES, INC.
NASHVILLE, TENN. BALTIMORE, MD.

CORRECT _____ BRIDGE ENGINEER
APPROVED _____ STATE HIGHWAY ENGINEER

K-80-49

MICROFILMED

CONST NO. 19005-3153-44

PROJECT NO.	YEAR	SHEET NO.
IM-40-4(73)206	2002	

REVISIONS

NO.	DATE	BY	BRIEF DESCRIPTION
1	1-10-02	W.A.P.	ELEV., LIST OF DWG'S., LIST STD. DWG'S.
2	1-21-02	W.A.P.	REV. LIST OF DWG'S.
3	2-06-02	W.A.P.	REV. LIST OF DWG'S.

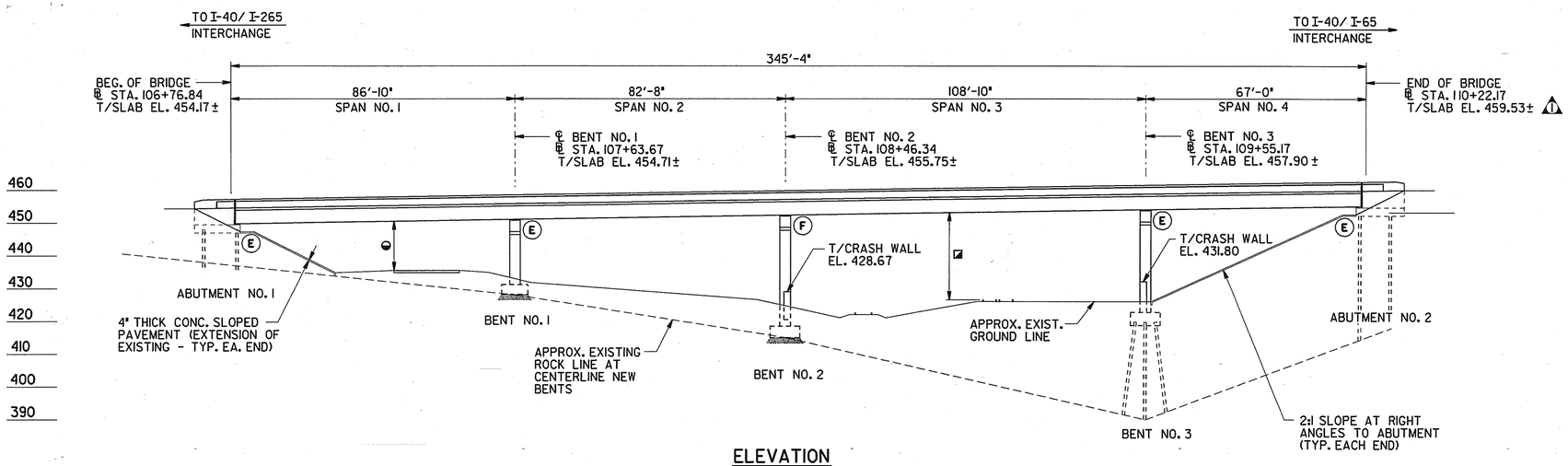

ELEVATION

(AT RIGHT ANGLES TO ℄ I-40 S.B.L.)
SCALE: 1" = 20'

NOTE: THE FILLS AT THE ENDS OF THE BRIDGE SHALL BE IN PLACE AND THOROUGHLY COMPACTED BEFORE ANY ABUTMENT PILES ARE DRIVEN.

◯ DENOTES: EXISTING AND PROPOSED SUPPORT CONDITION

E DENOTES: EXPANSION

F DENOTES: FIXED

◪ DENOTES: EXISTING VERT. CLEARANCE = 26'-9"
PROPOSED VERT. CLEARANCE = 26'-9½"

◒ DENOTES: EXISTING MINIMUM VERT. CLEARANCE = 15'-0"
PROPOSED MINIMUM VERT. CLEARANCE = 15'-0½"

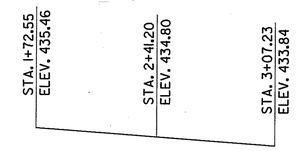

GRAPHICAL GRADE - HERMAN STREET

(LEFT EDGE OF PAVEMENT)

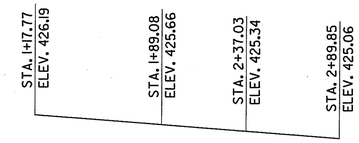

GRAPHICAL GRADE

(NASHVILLE AND WESTERN RAILROAD)

LIST OF DRAWINGS 1 2 3

DWG. NO.	LAST REV. DATE	DRAWING
M-427-25	2-06-02	ELEVATION OF BRIDGE NO. 1
M-427-26	1-21-02	PLAN OF BRIDGE NO. 1
M-427-27		GENERAL NOTES
M-427-28	2-06-02	ESTIMATED QUANTITIES
M-427-29		FOUNDATION DATA
M-427-30		SUPERSTRUCTURE
M-427-31		SUPERSTRUCTURE DETAILS
M-427-32		SUPERSTRUCTURE DETAILS
M-427-33		FRAMING PLAN
M-427-34		STRUCTURAL STEEL DETAILS
M-427-35		STRUCTURAL STEEL DETAILS
M-427-36		BRIDGE SCREED
M-427-37	1-10-02	ABUTMENT NO. 1
M-427-38		ABUTMENT NO. 1 DETAILS
M-427-39	1-10-02	ABUTMENT NO. 2
M-427-40		ABUTMENT NO. 2 DETAILS
M-427-41	1-10-02	BENT NOS. 1, 2 AND 3
M-427-42		BENT DETAILS
M-427-43		FINAL FOUNDATION DATA
M-427-44		BILL OF STEEL
M-427-45		BILL OF STEEL

* REFERENCE DRAWINGS

DWG. NOS. K-80-5 THRU K-80-12, BR-46-93, BR-46-100, BR-46-101, BR-46-103

*DENOTES: THESE DRAWINGS ARE TO BE PRINTED WITH PLANS.

LIST OF STANDARD DRAWINGS 1

DWG. NO.	LAST REV. DATE	DRAWING
STD-1-1	7-31-00	BRIDGE RAILING CONCRETE PARAPET
STD-1-2	1-05-01	STEEL SLIDER PLATE ASSEMBLIES FOR CONCRETE PARAPET AND BRIDGE DECK DRAIN DETAILS
STD-1-5	7-31-00	REINFORCED CONCRETE PAVEMENT AT BRIDGE ENDS
STD-1-6	4-28-97	BRIDGE END DRAIN DETAILS 2'x8'-7" AND 4'x8'-7" WITH PAVEMENT AT BRIDGE ENDS
STD-1-7	7-31-00	BRIDGE END DRAIN DETAILS 2'x8'-7" AND 4'x8'-7" WITH PAVEMENT AT BRIDGE ENDS
STD-1-9	5-01-95	BRIDGE END DRAIN DETAILS 4'x8'-7" WITH PAVEMENT AT BRIDGE ENDS
STD-3-1	2-14-94	STRIP SEAL EXPANSION JOINT NEW CONSTRUCTION
STD-3-2	2-14-94	STRIP SEAL EXPANSION JOINT NEW CONSTRUCTION
STD-4-1	5-21-99	STANDARD PRECAST PRESTRESSED BRIDGE DECK PANELS GENERAL DETAILS
STD-4-2	6-10-96	STANDARD PRECAST PRESTRESSED BRIDGE DECK PANELS DESIGN CRITERIA
STD-4-3	6-10-96	STANDARD PRECAST PRESTRESSED BRIDGE DECK PANELS GENERAL DETAILS
STD-4-4	6-10-96	STANDARD PRECAST PRESTRESSED BRIDGE DECK PANELS CONSTRUCTION DETAILS
STD-5-1	10-25-93	STANDARD PILE DETAILS
STD-5-2	5-21-99	STANDARD PILE DETAILS
STD-8-2	9-01-91	LIGHT STANDARD-SUPPORT DETAILS
STD-9-1	12-19-94	REINFORCING BAR SUPPORT DETAILS FOR CONCRETE SLABS
STD-10-1	5-11-92	MISCELLANEOUS ABUTMENT AND DRAINAGE DETAILS
RD-SA-1	5-27-98	SAFETY APPROACH TO UNDERPASSES GRADING DESIGN AND SLOPE PROTECTION

LIST OF SPECIAL PROVISIONS

NO.	LAST REV. DATE	REGARDING
105A	12-15-97	APPROVAL OF SHOP DRAWINGS
602	3-18-96	STEEL STRUCTURES
604CR	2-19-96	REPAIR OF BRIDGE DECK CRACKS
604S	5-01-00	STRIP SEAL EXPANSION DEVICE

*DENOTES: THESE DRAWINGS ARE TO BE PRINTED WITH PLANS.

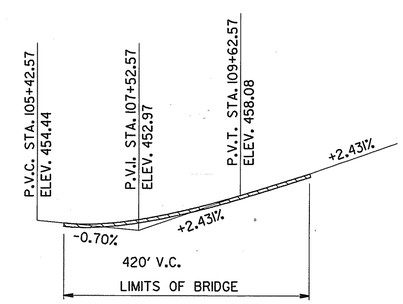

PROPOSED GRADE AT TOP OF SLAB

(FOR BRIDGE CONSTRUCTION ONLY)

NOTE: TOP OF SLAB TO BE 3¼"± BELOW FINAL ASPHALT GRADES AS SHOWN ON ROADWAY PLANS.

LARRY W. MILLER
REGISTERED ENGINEER
No. 022284
STATE OF TENNESSEE
3-7-02

ESTIMATED ADT (2022) = 50,200

DESIGN SPEED = 55 M.P.H.

84'-0" ROADWAY WITH TYPE STD-1-1 (MODIFIED) CONCRETE PARAPET

STATE OF TENNESSEE
DEPARTMENT OF TRANSPORTATION

ELEVATION OF BRIDGE NO. 1
WIDENING OF INTERSTATE 40
OVER
HERMAN STREET AND
NASHVILLE AND WESTERN RAILROAD
STATION 107+33.78 (LOG MI. 16.62)
BRIDGE ID. NO. 19I00400061
DAVIDSON COUNTY
2002

M-427-25

DESIGNED BY L. MILLER DATE 12/01
DRAWN BY t.wilson DATE 12/01
SUPERVISED BY PETRONE DATE 12/01
CHECKED BY WILSON, PETRONE DATE 12/01

TWilson
2/7/02
12:53:30
PM
1 copies
D:\LOCAL\FULL\$DWG\29938\583846\583846_TWilson.prf

DECK SEALANT QUANTITY 995 S.Y.

PORTABLE BARRIER RAIL 346 FEET

CONST NO. 19005-3153-44

PROJECT NO.	YEAR	SHEET NO.
IM-40-4(73)206	2002	

REVISIONS

NO.	DATE	BY	BRIEF DESCRIPTION
1	1-10-02	W.A.P.	MIN. CLR. POINT AND P.A.B.E. NOTE
2	1-21-02	W.A.P.	ADDED SECTION "A-A"

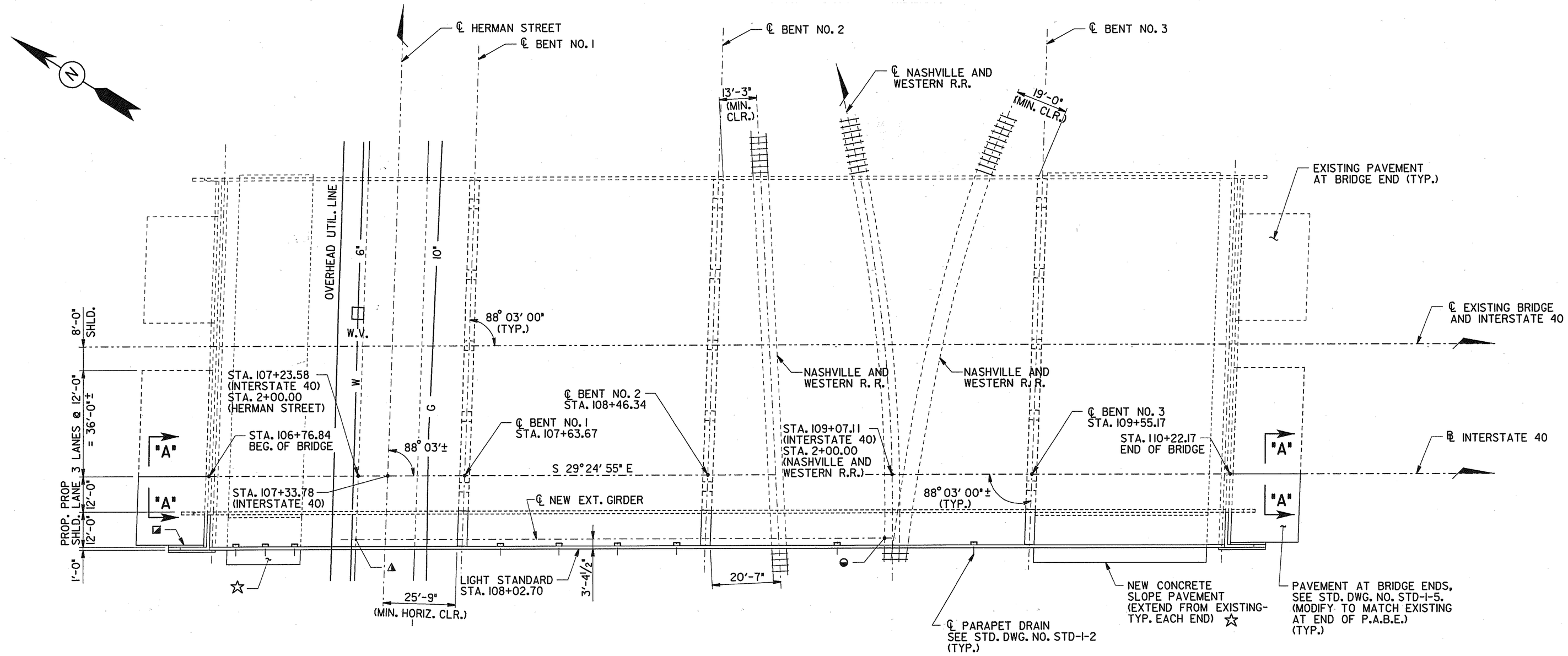

PLAN 1 2

SCALE: 1" = 20'-0"

◪ DENOTES: END OF BRIDGE DRAIN. SEE STD. DWG NOS. STD-1-6, STD-1-7, STD-1-9

△ DENOTES: POINT OF MINIMUM VERTICAL CLEARANCE - HERMAN STREET.
EXISTING = 15'-0"
PROPOSED = 15'-0½"

◒ DENOTES: POINT OF MINIMUM VERTICAL CLEARANCE - NASHVILLE AND WESTERN RAILROAD
EXISTING = 26'-9"
PROPOSED = 26'-9½"

☆ DENOTES: 4" THICK REINFORCED CONCRETE SLOPE PAVEMENT. SEE GENERAL NOTES ON M-427-27 FOR CONSTRUCTION REQUIREMENTS AND LIMITS.

NOTE: SEE STD. DWG. NO. STD-8-2, FOR LIGHT STANDARD SUPPORT DETAILS.

PARAPET DRAIN LOCATIONS

STA. 106+86
STA. 106+96
STA. 107+06
STA. 107+76
STA. 107+96
STA. 108+16
STA. 108+36
STA. 108+90
STA. 109+36

NOTE: COST OF NINE (9) PARAPET DRAINS TO BE INCLUDED IN THE UNIT PRICE BID FOR CONCRETE PARAPET.

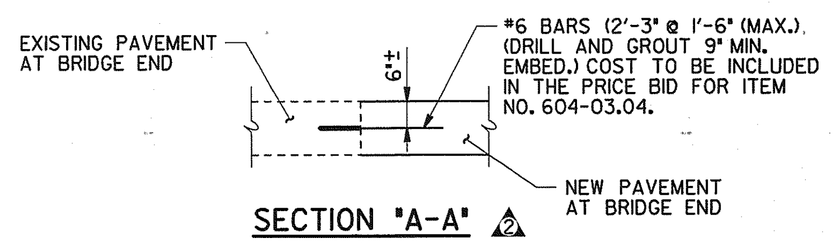

SECTION "A-A" 2

STATE OF TENNESSEE
DEPARTMENT OF TRANSPORTATION

PLAN OF BRIDGE NO. 1
WIDENING OF INTERSTATE 40
OVER
HERMAN STREET AND
NASHVILLE AND WESTERN RAILROAD
STATION 107+33.78 (LOG MI. 16.62)
BRIDGE ID. NO. 19I00400061
DAVIDSON COUNTY
2002

LARRY W. MILLER REGISTERED ENGINEER AGRICULTURE COMMERCE No. 022281 STATE OF TENNESSEE 1-21-02

M-427-26

DESIGNED BY L. MILLER DATE 12/01
DRAWN BY T. WILSON DATE 12/01
SUPERVISED BY PETRONE DATE 12/01
CHECKED BY WILSON, PETRONE DATE 12/01

Twilson
1/21/02
10:00 AM
Plot Scales 1
DN:\LOCALVOL1\BIND\27622.58384\6.83846pln_Twilson.pnt

NOT HERE

CONST NO. 19005-3153-44

PROJECT NO.	YEAR	SHEET NO.
IM-40-4(73)206	2002	

REVISIONS

NO.	DATE	BY	BRIEF DESCRIPTION
1	2-06-02	W.A.P.	REV. FOOTNOTE 14 AND PAINTING NOTES

ESTIMATED QUANTITIES

ITEM NO.	202-04.01	204-02.01	204-04.01	204-05	303-01.02	602-04.01	603-02.01	603-05.20	604-02.03	604-03.01	604-03.02	604-03.04	604-03.09
ITEM	REMOVAL OF STRUCTURES (BRIDGE NO. 1) (STA. 108+46.34) L.S. (4)	DRY EXCAVATION (BRIDGES) C.Y. (1)	ROCK EXCAVATION (BRIDGES) C.Y. (1)	ROCK DRILLING (BRIDGES) L.F. (1)	GRANULAR BACKFILL (BRIDGES) TON (3)	STEEL STRUCTURES (BRIDGE NO. 1) L.S. (7)	REPAINTING EXISTING STEEL STRUCTURES (BRIDGE NO. 1) L.S. (14)	CONTAINMENT AND DISPOSAL OF WASTE (BRIDGE NO. 1) L.S.	EPOXY COATED REINFORCING STEEL LBS.	CLASS "A" CONCRETE (BRIDGES) C.Y.	STEEL BAR REINFORCEMENT (BRIDGES) LBS.	PAVEMENT AT BRIDGE ENDS S.Y. (5)	CLASS "D" CONCRETE (BRIDGE DECK) C.Y.
SUPERSTRUCTURE									34,551				140
ABUTMENT NO. 1		30			4				338	14	1,985		
BENT NO. 1		21	2	6						18	1,959		
BENT NO. 2		37	2	6						23	3,443		
BENT NO. 3		30								23	3,407		
ABUTMENT NO. 2		30			4				338	14	1985		
TOTAL	1	148	4	12	8	1	1	1	35,227	92	12,779	64	140

ESTIMATED QUANTITIES (CONT'D.)

ITEM NO.	604-04.01	604-04.02	604-11.01	606-03.03	606-03.06	617-02	617-05	620-03.10	709-04	710-09.01	710-09.02	714-01.01	908-21.01	908-21.02	908-21.03
ITEM	APPLIED TEXTURE FINISH (NEW STRUCTURES) S.Y.	APPLIED TEXTURE FINISH (EXIST. STRUCTURES) S.Y.	EXPANSION DEVICE (STRIPSEAL) (11) L.F. (13)	STEEL PILES (12 INCH) L.F.	PILE TIPS (STEEL PILES, 12 INCH) EACH (12)	BRIDGE DECK CRACK SEALING L.F. (8)	SEALANT (HMWM) GAL. (9)	CONCRETE PARAPET (STD-1-1) (MODIFIED) L.F.	REINFORCED CONCRETE SLOPE PAVEMENT C.Y.	6" PERF. PIPE W/VERTICAL DRAIN SYSTEM L.F. (2)	6" PIPE UNDERDRAIN L.F.	STRUCTURAL LIGHTING (BRIDGE NO. 1) L.S. (10)	BEARINGS (ABUTMENTS) EACH (15)	BEARINGS (BENT NOS. 1 AND 3) EACH (15)	BEARINGS (BENT NO. 2) EACH (15)
SUPERSTRUCTURE															
ABUTMENT NO. 1			16	48	4					23	16		2		
BENT NO. 1														2	
BENT NO. 2															2
BENT NO. 3				179	6										
ABUTMENT NO. 2			16	150	4					23	16		2	2	
TOTAL	571	1,561	32	377	14	343	5	371	21	46	32	1	4	4	2

FOOTNOTES

(1) EXCAVATION BASED ON EXISTING GROUND.

(2) COST OF POLYETHYLENE SHEETING AND ALL MISCELLANEOUS ITEMS NECESSARY FOR INSTALLATION TO BE INCLUDED IN THE UNIT PRICE BID FOR PERFORATED PIPE.

(3) GRANULAR BACKFILL SHALL BE CLASS "A" GRADING "D" MATERIAL. SEE STANDARD DRAWING STD-10-1.

(4) THE COST OF REMOVING THE EXTERIOR PORTION OF THE EXISTING SLAB, PORTIONS OF THE EXISTING ABUTMENT, LIGHT STANDARD, AND THE BRIDGERAIL SHALL BE INCLUDED IN THE UNIT PRICE BID FOR ITEM 202-04.01.

(5) PRIOR TO CONSTRUCTION OF THE PAVEMENT AT BRIDGE ENDS, THE CONTRACTOR SHALL SUBMIT A PROPOSED BILL OF STEEL TO THE ENGINEER FOR APPROVAL. IN ADDITION PRICE BID SHALL INCLUDED THE COST OF ONE (1) END OF BRIDGE DRAIN.

(6) THE COST OF BITUMINOUS-FIBERBOARD, AND ALL MISCELLANEOUS JOINT MATERIAL TO BE INCLUDED IN THE UNIT PRICE BID FOR OTHER ITEMS.

(7) LUMP SUM: TOTAL ESTIMATED WEIGHT OF 93,131 LBS. OF STRUCTURAL STEEL (9,871 LBS. GRADE 36 AND 83,260 LBS. GRADE 50), INCLUDES PLATES, ANGLES, SHEAR STUDS, BOLTS, ETC. ALSO SEE TENNESSEE STANDARD SPECIFICATIONS SECTION 602.49 AND 602.50.

(8) INCLUDES ALL COST FOR INSTALLING THE BRIDGE DECK CRACK SEALER (HMWM) INCLUDING CRACK PREPARATION, CLEANING, LABOR, AND ALL MISCELLANEOUS MATERIALS REQUIRED TO SEAL THE LONGITUDINAL CONSTRUCTION JOINT AT BASE OF PARAPET ACCORDING TO SPECIAL PROVISION 604CR AND MANUFACTURERS SPECIFICATIONS. THIS ITEM DOES NOT INCLUDE THE COST OF FURNISHING THE BRIDGE CRACK SEALANT ITSELF.

(9) INCLUDES ALL COST FOR FURNISHING THE SEALER MATERIAL (HMWM) FOR SEALING CRACKS. THE SEALER (HMWM) SHALL BE IN ACCORDANCE WITH SPECIAL PROVISION 604CR.

(10) LUMP SUM FOR STRUCTURAL LIGHTING, ITEM NO. 714-01.01 INCLUDES 680 FT. 2" CONDUIT WITH PULL WIRES, 1 JUNCTION BOX, 2 PULL BOXES, 4-ANCHOR BOLTS AND ALL OTHER NECESSARY MATERIALS FOR INSTALLATION OF STRUCTURAL LIGHTING.

(11) THE PRICE BID FOR ROADWAY EXPANSION DEVICE TO INCLUDE THE COST OF 32 S.Y. OF CONCRETE SEAL REQUIRED. SEE GENERAL NOTES FOR DESCRIPTION OF CONCRETE SEAL.

(12) THE UNIT PRICE BID FOR THE CAST STEEL POINTS SHALL INCLUDE FURNISHING AND INSTALLATION TO THE PILES.

(13) THE EXPANSION JOINT AT ABUTMENT NOS. 1 AND 2 SHALL BE IN ACCORDANCE WITH SPECIAL PROVISION 604S AND STANDARD DRAWING STD-3-1 AND STD-3-2. THE TOTAL REQUIRED MOVEMENT IS 4 INCHES. SHOP DRAWINGS SHALL BE SUBMITTED TO THE ENGINEER OF STRUCTURES FOR APPROVAL. PRICE BID FOR ITEM 604-11.01 EXPANSION DEVICE (STRIPSEAL) SHALL INCLUDE COST TO FURNISH AND INSTALL 68'-10" OF ELASTOMERIC MEMBRANE.

1 (14) INCLUDES ALL LABOR AND MATERIALS NECESSARY FOR SURFACE PREPARATION AND PAINTING OF 30 TOTAL EXISTING BEARING DEVICES AT ABUTMENT NOS. 1 AND 2. SEE CLEANING AND PAINTING NOTES, THIS SHEET.

(15) INCLUDES ALL LABOR AND MATERIALS NECESSARY TO FURNISH AND INSTALL ELASTOMERIC BEARING DEVICES AS SHOWN IN DETAILS ON DWG. NO. M-427-32.

CLEANING AND PAINTING NOTES 1

ALL ABUTMENT BEARING DEVICES SHALL BE CLEANED AND PAINTED. CLEANING SHALL BE IN ACCORDANCE WITH TENNESSEE STANDARD SPECIFICATION SECTION 603.05(a). HAND OR POWER TOOL CLEANING SHALL REMOVE ALL RUST, SCALE, LOOSE PAINT AND DIRT. AFTER CLEANING, THE BEARINGS SHALL BE PAINTED WITH AN APPROVED EPOXY MASTIC PAINT APPLIED AT A MINIMUM DRY FILM THICKNESS OF 4.0 MILS. THE COLOR OF THE FINISH COAT SHALL COMPLY WITH FEDERAL STANDARD NO. 595A, FEDERAL SPECIFICATION NO. 24110 (BRIGHT GREEN). SEE SECTIONS 603 AND 910 OF THE STANDARD SPECIFICATIONS.

SEE TENNESSEE DEPARTMENT OF TRANSPORTATION'S QUALIFIED PRODUCTS LIST FOR ACCEPTABLE BRANDS OF EPOXY MASTIC. ALL PRODUCTS USED, INCLUDING THINNERS SHALL BE SUPPLIED BY THE SAME MANUFACTURER.

APPLICATION: THE COATING APPLICATOR SHALL FOLLOW THE MANUFACTURER'S PRINTED INSTRUCTIONS AND SHALL HAVE THESE INSTRUCTIONS ON SITE DURING THE COURSE OF THE WORK.

LARRY W. MILLER REGISTERED ENGINEER AGRICULTURE CONTRACT No. 02228 STATE OF TENNESSEE 2-7-02

STATE OF TENNESSEE
DEPARTMENT OF TRANSPORTATION

ESTIMATED QUANTITIES
WIDENING OF INTERSTATE 40
OVER
HERMAN STREET AND
NASHVILLE AND WESTERN RAILROAD
STATION 107+33.78 (LOG MI. 16.62)
BRIDGE ID. NO. 19I00400061
DAVIDSON COUNTY
2002

M-427-28

DESIGNED BY	L. MILLER	DATE	12/01
DRAWN BY	t. wilson	DATE	12/01
SUPERVISED BY	PETRONE	DATE	12/01
CHECKED BY	WILSON, PETRONE	DATE	12/01

TWilson
2/7/02
8:39 AM
Pw:\\LOCALTILL\DND\29098.153346.838146\gnt.TWilson.prf

CONST NO. 19005-3153-44

PROJECT NO.	YEAR	SHEET NO.
IM-40-4(73)206	2002	

REVISIONS

NO.	DATE	BY	BRIEF DESCRIPTION

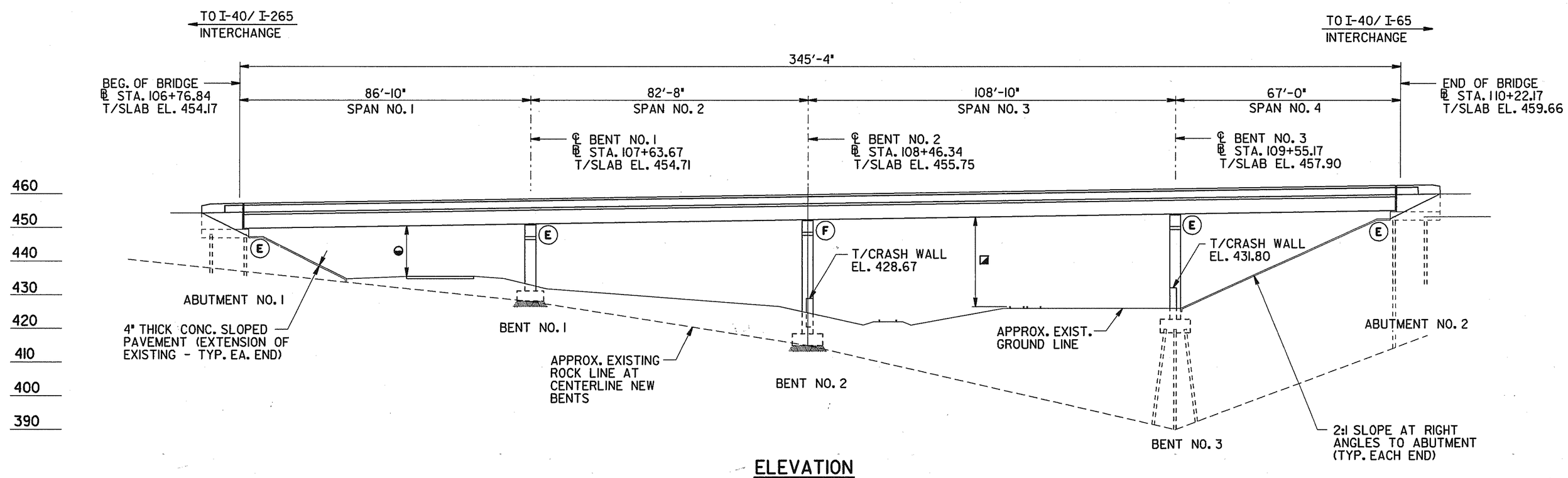

ELEVATION

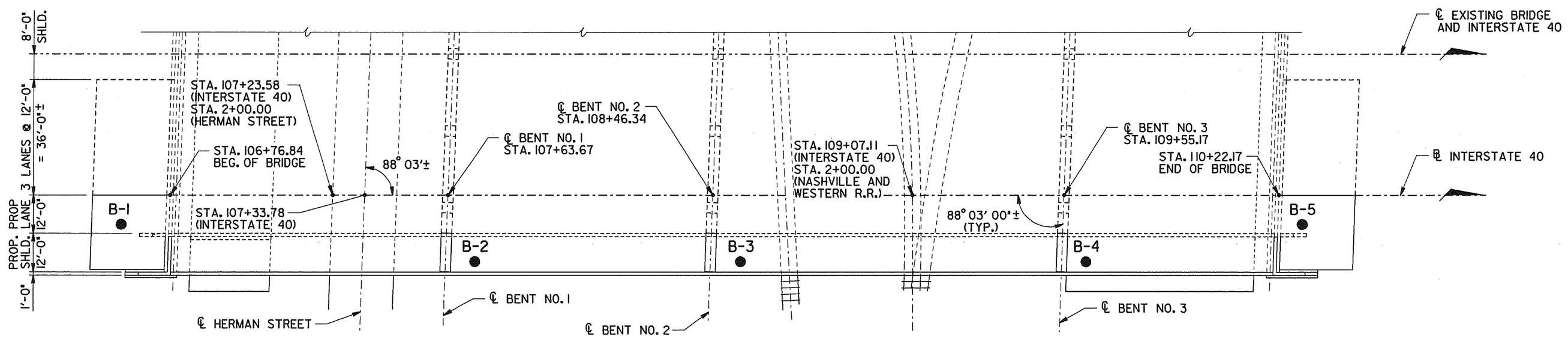

PLAN

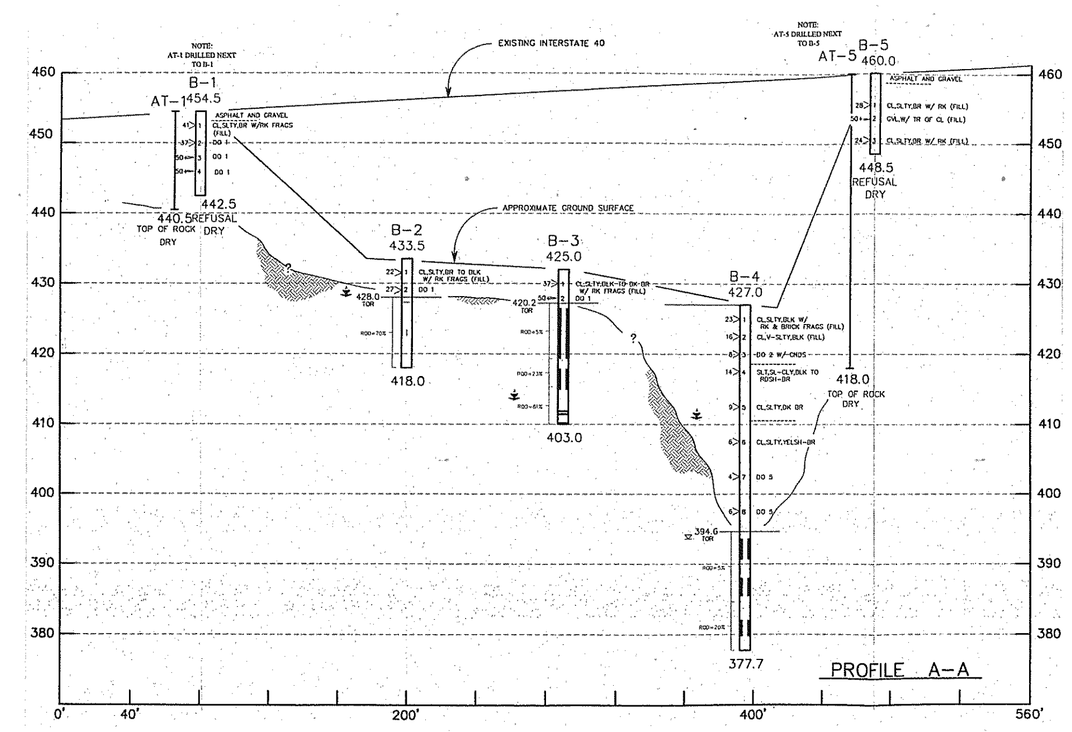

REQUIRED INFORMATION

APPROXIMATE EXISTING GROUND LINE AND ROCK LINE.

SUFFICIENT GROUND AND CORING INFORMATION FOR BRIDGE FOUNDATION.

NOTE

THIS SHEET IS FOR FOUNDATION INVESTIGATION PURPOSE ONLY AND IS NOT TO BE USED FOR FINAL CONSTRUCTION STAKE-OUT PURPOSES.

LARRY W. MILLER REGISTERED ENGINEER GRADUATE ENGINEER No. 022293 STATE OF TENNESSEE 12/10/01

STATE OF TENNESSEE
DEPARTMENT OF TRANSPORTATION

FOUNDATION DATA
WIDENING OF INTERSTATE 40
OVER
HERMAN STREET AND
NASHVILLE AND WESTERN RAILROAD
STATION 107+33.78 (LOG MI. 16.62)
BRIDGE ID. NO. 19I0040006I
DAVIDSON COUNTY
2002

M-427-29

DESIGNED BY L. MILLER DATE 12/01
DRAWN BY t.wilson DATE 12/01
SUPERVISED BY PETRONE DATE 12/01
CHECKED BY WILSON, PETRONE DATE 12/01

t.wilson 12/10/01 1 copies Plot: D:\LOCALVOL1\BOND\2495\583846\83846find_t.wilson.prf

CONST NO. 19005-3153-44

PROJECT NO.	YEAR	SHEET NO.
IM-40-4(73)206	2002	

REVISIONS

NO.	DATE	BY	BRIEF DESCRIPTION

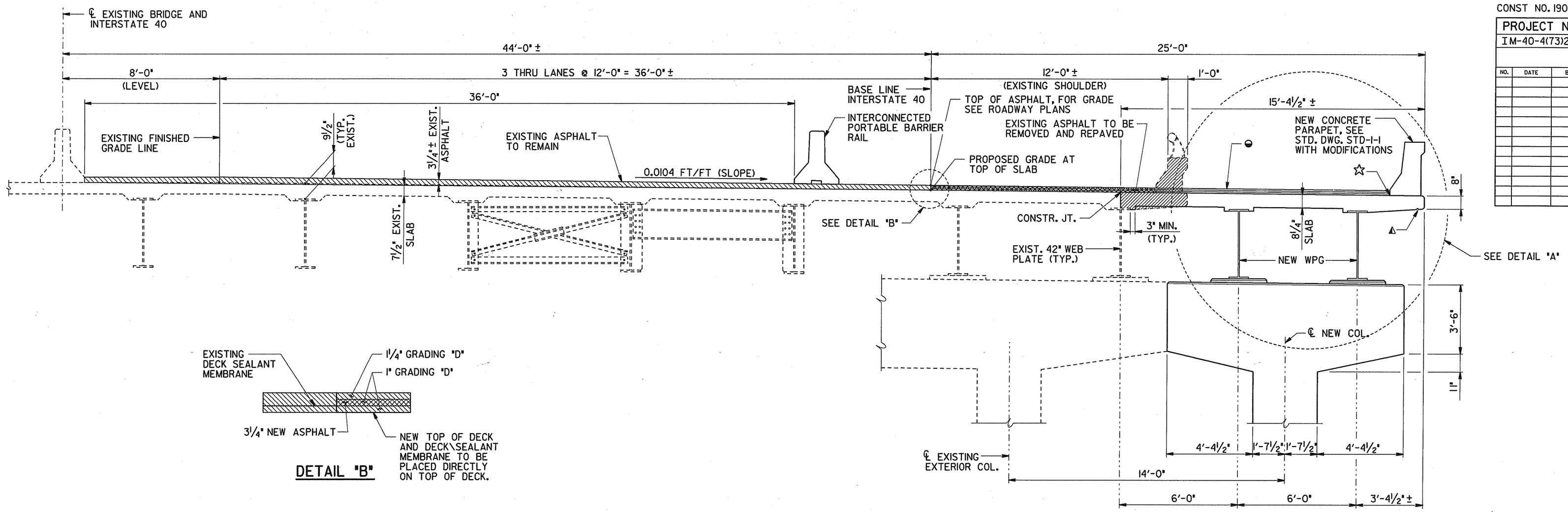

DETAIL "B"

TYPICAL CROSS SECTION

SCALE: ⅜" = 1'-0"

DENOTES: AREA OF EXISTING STRUCTURE TO BE REMOVED.

▲ DENOTES: 1" TRIANGULAR NOTCH DRIP BEAD TO RUN FULL LENGTH OF SLAB. (TYP.)

☆ DENOTES: CONTRACTOR TO SEAL LONGITUDINAL DECK CRACK WITH (HMWM) CRACK SEALANT.

◒ DENOTES: FOR NEW ASPHALT ON TOP OF NEW 8¼" SLAB. SEE DETAIL "B" AND ROADWAY PLANS FOR BRIDGE DECK ASPHALT OVERLAY DETAILS.

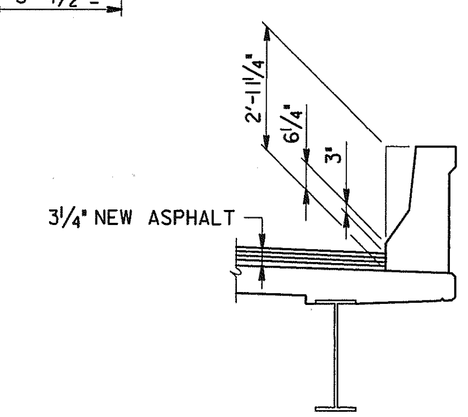

MODIFICATION TO PARAPET HEIGHT

NOTE: FOR DIMENSIONS AND DETAILS NOT SHOWN, SEE DWG. STD-I-I. ADD 3" TO ALL VERTICAL BAR LENGTHS.

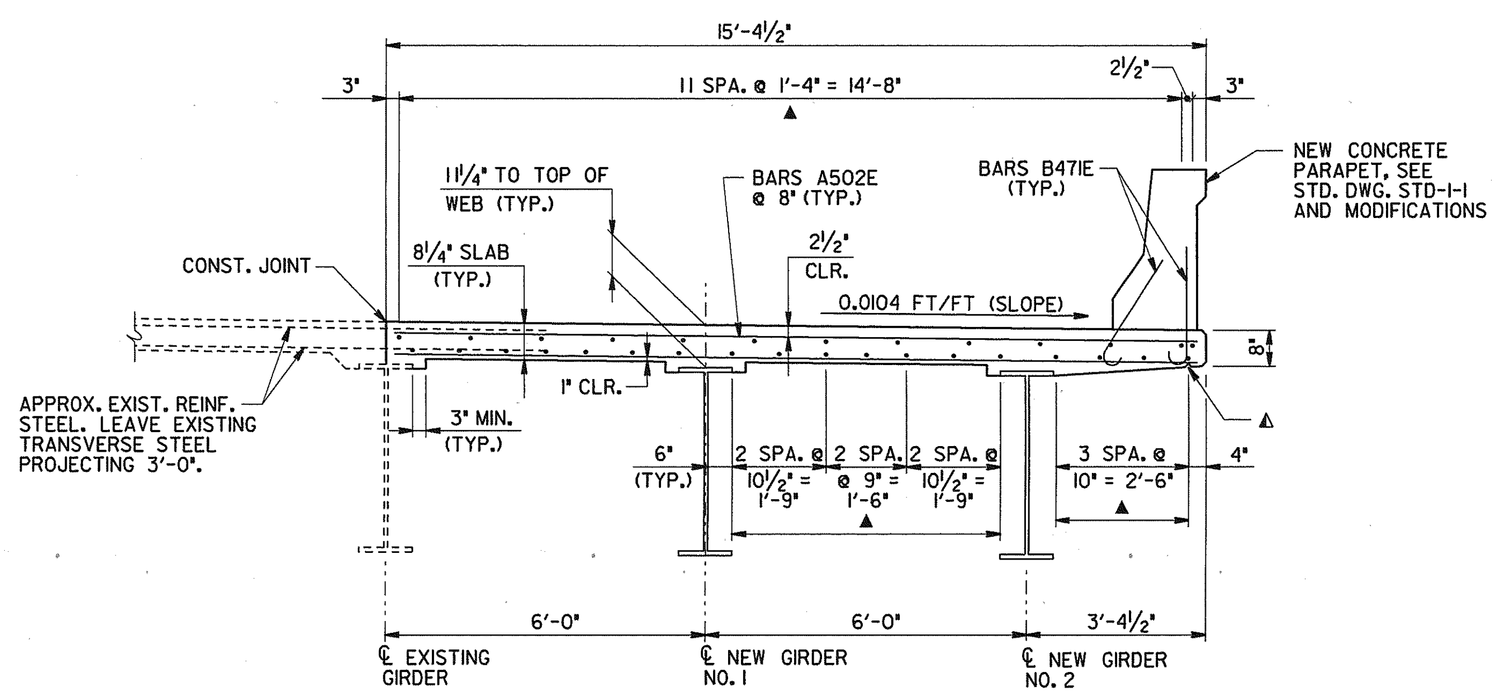

DETAIL "A"

▲ DENOTES: BARS A500E s/w BARS A500E s/w BARS A501E

NOTE: PROVISIONS SHALL BE MADE DURING SLAB REMOVAL TO PROTECT THE EXISTING TRANSVERSE REINFORCEMENT. THE EXISTING REINFORCING STEEL SHALL BE COMPLETELY CLEANED, REALIGNED AND INCORPORATED INTO THE NEW SLAB CONSTRUCTION.

NOTE: WHEN POURING SLAB, PROVISIONS SHALL BE MADE FOR SETTING REINFORCING STEEL FOR PARAPET. THE PARAPET SHALL NOT BE POURED UNTIL THE SLAB IS POURED AND CURED. ALSO SEE DRAWING NO. STD-I-I.

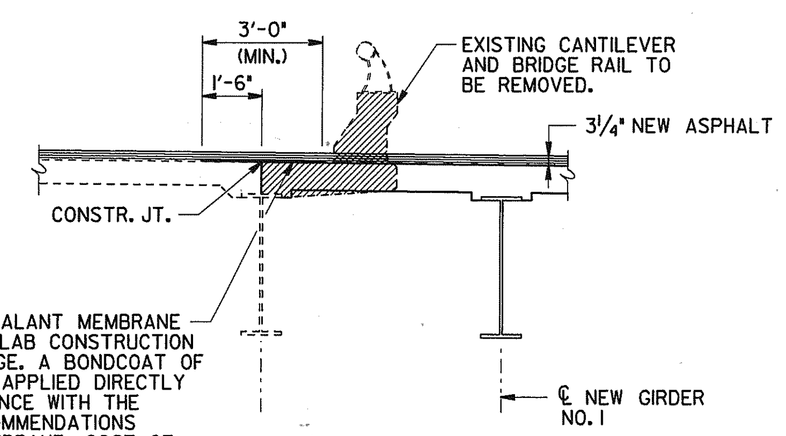

✱ ONE (1) LAYER OF BRIDGE DECK SEALANT MEMBRANE SHALL BE PLACED ACROSS THE SLAB CONSTRUCTION JOINT FOR FULL LENGTH OF BRIDGE. A BONDCOAT OF ACCEPTABLE ADHESIVE SHALL BE APPLIED DIRECTLY TO THE BRIDGE DECK IN ACCORDANCE WITH THE MEMBRANE MANUFACTURER'S RECOMMENDATIONS JUST PRIOR TO PLACING THE MEMBRANE. COST OF MEMBRANE, BONDING ADHESIVE AND ALL OTHER MATERIALS, EQUIPMENT AND LABOR NECESSARY FOR INSTALLATION AS SHOWN SHALL BE INCLUDED UNDER ITEM NO. 617-01, BRIDGE DECK SEALANT.

DECK SEALANT DETAIL

✱ DENOTES: SEE SECTIONS 617 AND 906.04 OF THE TENNESSEE STANDARD SPECIFICATIONS FOR ROAD AND BRIDGE CONSTRUCTION.

ESTIMATED QUANTITIES

CLASS "D" CONCRETE (BRIDGE DECK) C.Y.	EPOXY COATED REINFORCING STEEL LBS.
140	34,551

STATE OF TENNESSEE
DEPARTMENT OF TRANSPORTATION

SUPERSTRUCTURE
WIDENING OF INTERSTATE 40
OVER
HERMAN STREET AND
NASHVILLE AND WESTERN RAILROAD
STATION 107+33.78 (LOG MI. 16.62)
BRIDGE ID. NO. 19I00400061
DAVIDSON COUNTY
2002

LARRY W. MILLER REGISTERED ENGINEER AGRICULTURE CONSULTING No. 022281 STATE OF TENNESSEE 12/10/01

M-427-30

DESIGNED BY L. MILLER DATE 12/01
DRAWN BY t. wilson DATE 12/01
SUPERVISED BY PETRONE DATE 12/01
CHECKED BY WILSON, PETRONE DATE 12/01

twilson
12/10/01
12:03:40
pw:\\pw-wp02.tn.gov:wp02pw1
D:\LOCAL\FULL\800\12495\1583846\838463\tr_twilson.prf

CONST NO. 19005-3153-44

PROJECT NO.	YEAR	SHEET NO.
IM-40-4(73)206	2002	

REVISIONS

NO.	DATE	BY	BRIEF DESCRIPTION

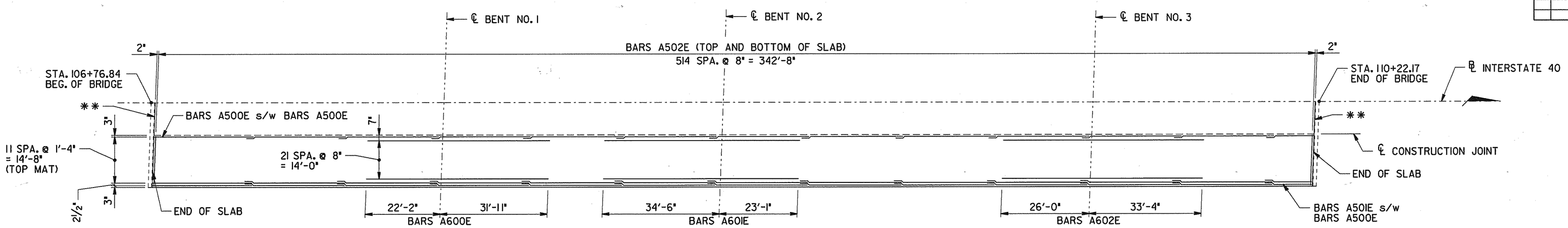

SLAB PLAN

NOTE: MIN. LAP NO. 5 BARS = 2'-0"

** DENOTES: SEE STD. STRIP SEAL INSTALLATION DRAWINGS FOR ADDITIONAL REINFORCEMENT.

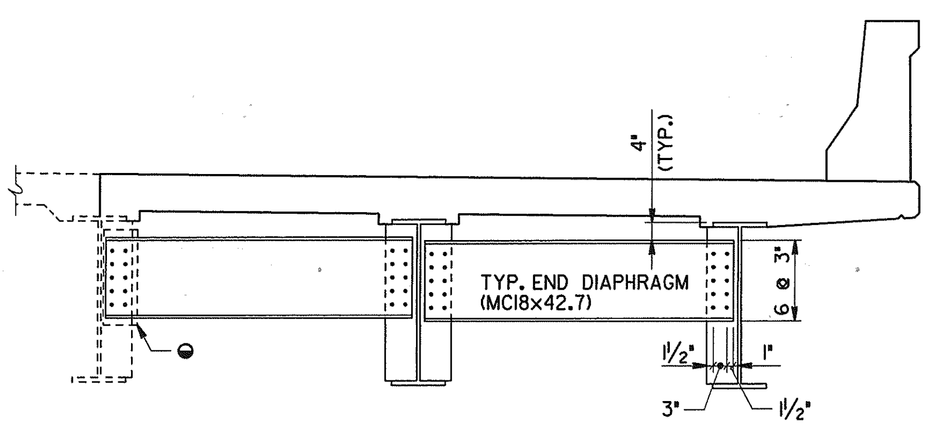

TYPICAL END DIAPHRAGM DETAIL

◒ DENOTES: CONTRACTOR HAS THE OPTION TO FIELD WELD THIS CONNECTION.

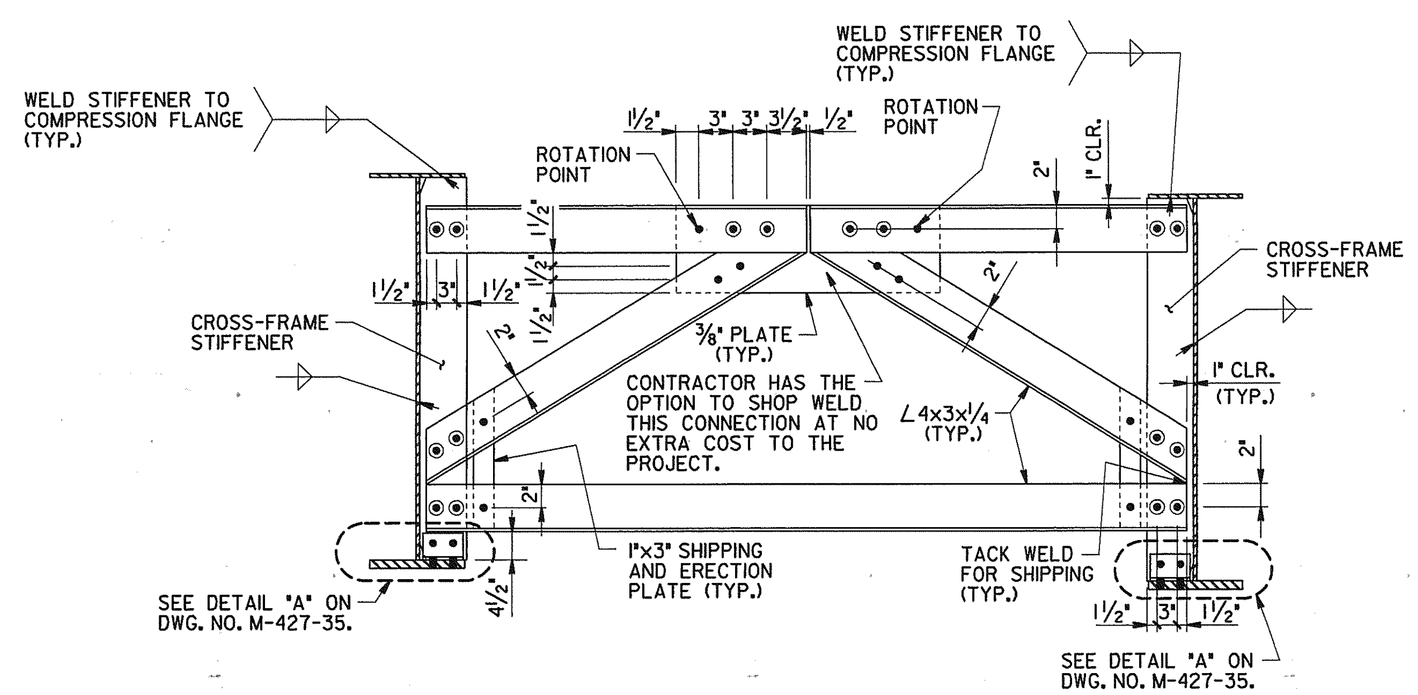

TYPICAL CROSS-FRAME DETAIL

NOTE: ALL BOLTS CIRCLED TO BE FIELD BOLTED.

NOTE: BOLTS AT ROTATION POINTS ARE TO BE HAND TIGHT WITH MEMBER IN THE DOWN POSITION FOR SHIPPING.

STATE OF TENNESSEE
DEPARTMENT OF TRANSPORTATION

SUPERSTRUCRURE DETAILS
WIDENING OF INTERSTATE 40
OVER
HERMAN STREET AND
NASHVILLE AND WESTERN RAILROAD
STATION 107+33.78 (LOG MI. 16.62)
BRIDGE ID. NO. 19100400061
DAVIDSON COUNTY
2002

M-427-31

DESIGNED BY	L. MILLER	DATE	12/01
DRAWN BY	t.wilson	DATE	12/01
SUPERVISED BY	PETRONE	DATE	12/01
CHECKED BY	WILSON, PETRONE	DATE	12/01

twilson
12/10/01
Rb24-1
Plot 1 copies :
BNLOCAL\FILL\BONDV2499\J583846\583846sdi.twilson.prt

CONST NO. 19005-3153-44

PROJECT NO.	YEAR	SHEET NO.
IM-40-4(73)206	2002	

REVISIONS

NO.	DATE	BY	BRIEF DESCRIPTION

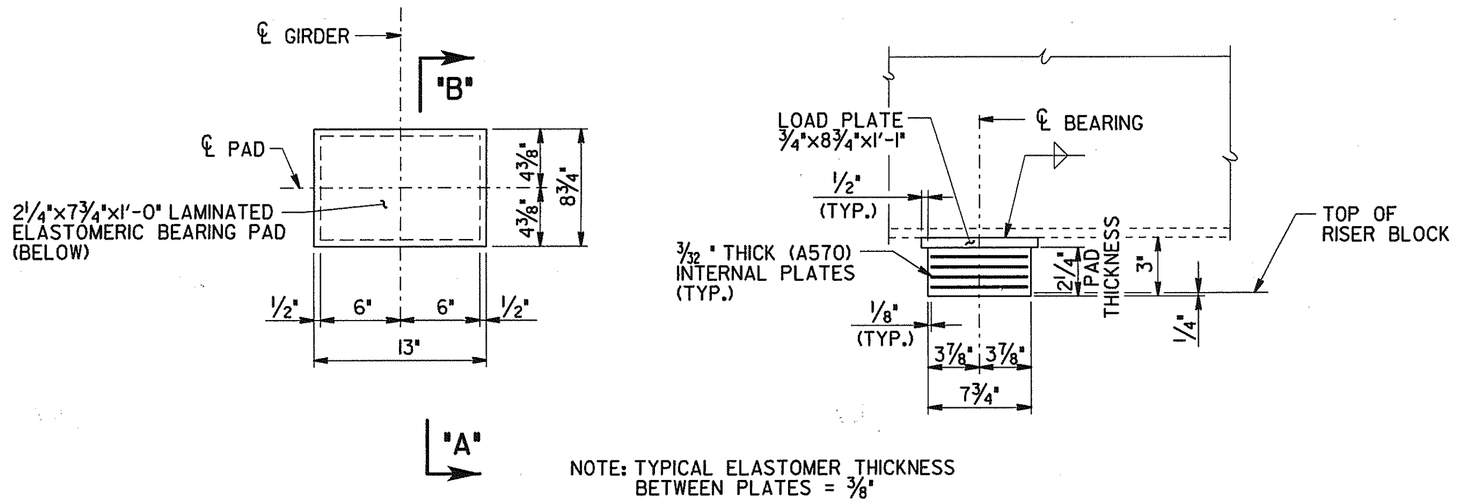

NOTE: TYPICAL ELASTOMER THICKNESS BETWEEN PLATES = ⅜"

PLAN

SECTION "B-B"

BEARING DETAILS AT ABUTMENTS

(4-REQUIRED)

NOTE: COST OF LAMINATED ELASTOMERIC BEARING PADS AND LOAD PLATES TO BE INCLUDED IN THE PRICE BID FOR ITEM NO. 908-21.01, BEARINGS (ABUTMENTS).

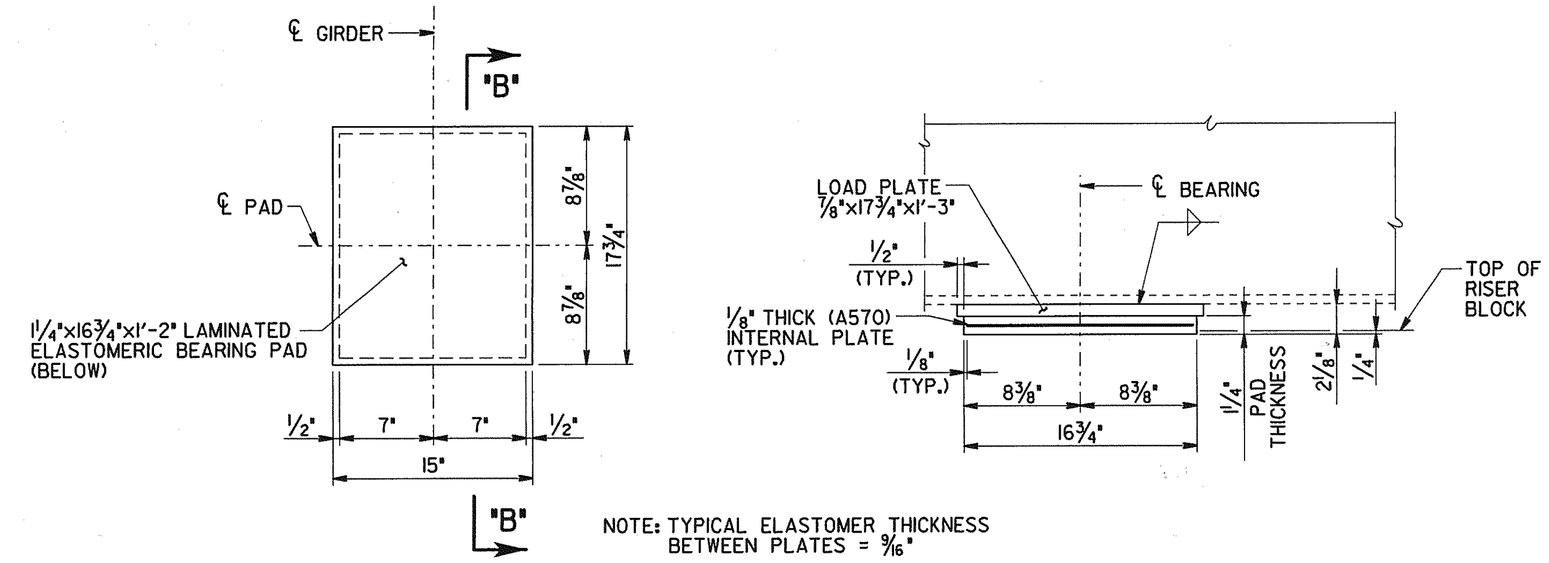

NOTE: TYPICAL ELASTOMER THICKNESS BETWEEN PLATES = 9/16"

PLAN

SECTION "B-B"

BEARING DETAILS AT BENT NOS. 1 AND 3

(4-REQUIRED)

NOTE: COST OF LAMINATED ELASTOMERIC BEARING PADS AND LOAD PLATES TO BE INCLUDED IN THE PRICE BID FOR ITEM NO. 908-21.02, BEARINGS (BENT NOS. 1 AND 3).

NOTE: ELASTOMERIC PORTION OF BEARING PAD SHALL BE FACTORY BONDED TO LOAD PLATE.

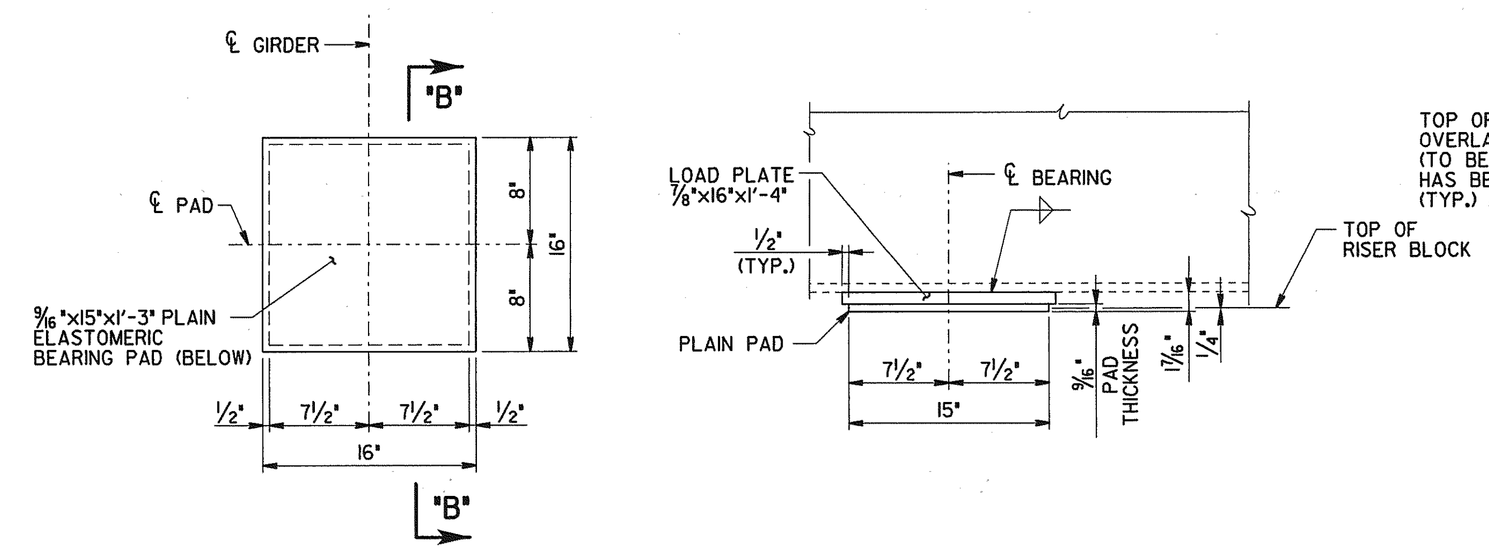

PLAN

SECTION "B-B"

BEARING DETAILS AT BENT NO. 2

(2-REQUIRED)

NOTE: COST OF LAMINATED ELASTOMERIC BEARING PADS AND LOAD PLATES TO BE INCLUDED IN THE PRICE BID FOR ITEM NO. 908-21.03, BEARINGS (BENT NO. 2).

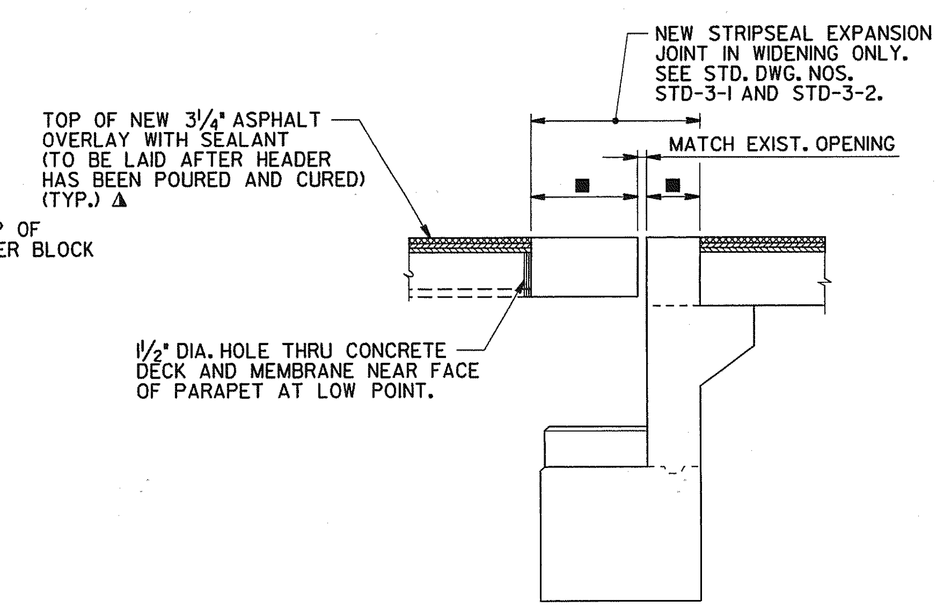

EXPANSION JOINT DETAIL

(TYPICAL AT ABUTMENTS)

▲ DENOTES: SEE SECTIONS 617 AND 906.04 OF THE TENNESSEE STANDARD SPECIFICATIONS FOR ROAD AND BRIDGE CONSTRUCTION.

■ DENOTES: NEW CONCRETE HEADER REQUIRED AT EACH SIDE OF JOINT. ACTUAL IN-PLACE HEADER WIDTH TO MATCH EXISTING.

NOTE: BRIDGE DECK SEALANT MEMBRANE, TDOT ITEM NO. 617-01 TO BE PLACED ON BRIDGE DECK SIDE OF JOINT ONLY.

NOTE: COST OF ALL LABOR AND MATERIALS NECESSARY TO INSTALL NEW EXPANSION JOINT, INCLUDING ANY MISCELLANEOUS MATERIALS TO BE INCLUDED IN THE PRICE BID FOR ITEM NO. 604-11.01, EXPANSION DEVICE (STRIPSEAL).

BRIDGE JOINT SYSTEM NOTES

NEW STRIP SEAL EXTENSION SHALL BE ONFLEX STRIP SEAL SYSTEM. THE STEEL RETAINER SHALL BE WELDED (IN ALIGNMENT) TO EXISTING RETAINER.

NOTE: THE RUBBER GLAND SHALL BE ONE PIECE (NO SPLICES). THE EXISTING GLAND SHALL BE REMOVED, THE RETAINER CLEANED AND A ONE PIECE GLAND INSTALLED FROM MEDIAN BARRIER TO THE EDGE OF BRIDGE. COST OF NEW STRIP SEAL (RETAINER LENGTH ONLY), REMOVAL OF GLAND, CLEANING EXISTING RETAINER, INSTALLATION OF NEW GLAND AND MISCELLANEOUS MATERIALS AND LABOR FOR COMPLETE STRIP SEAL INSTALLATION SHALL BE PAID FOR UNDER ITEM NO. 604-11.01.

STATE OF TENNESSEE
DEPARTMENT OF TRANSPORTATION

SUPERSTRUCTURE DETAILS
WIDENING OF INTERSTATE 40
OVER
HERMAN STREET AND
NASHVILLE AND WESTERN RAILROAD
STATION 107+33.78 (LOG MI. 16.62)
BRIDGE ID. NO. 19I00400061
DAVIDSON COUNTY
2002

M-427-32

DESIGNED BY L. MILLER DATE 12/01
DRAWN BY t. wilson DATE 12/01
SUPERVISED BY PETRONE DATE 12/01
CHECKED BY WILSON, PETRONE DATE 12/01

twellson
12/10/01
Page 1 of 1
pw:c:\temp\es
BA\LOCAL\FULL\60ND\24951.053846.83846sd2.twellson.prf

CONST NO. 19005-3153-44

PROJECT NO.	YEAR	SHEET NO.
IM-40-4(73)206	2002	

REVISIONS

NO.	DATE	BY	BRIEF DESCRIPTION

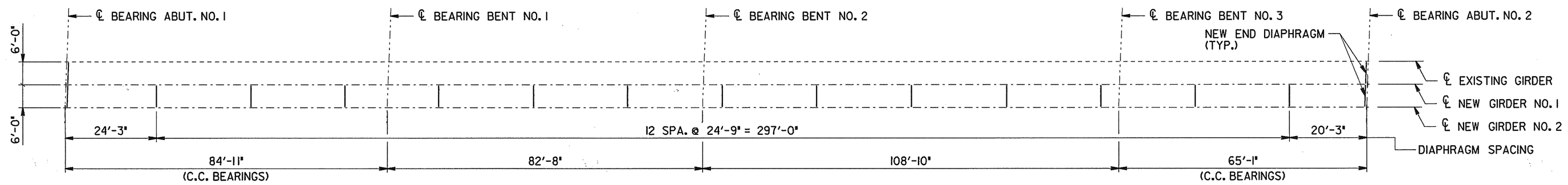

FRAMING PLAN

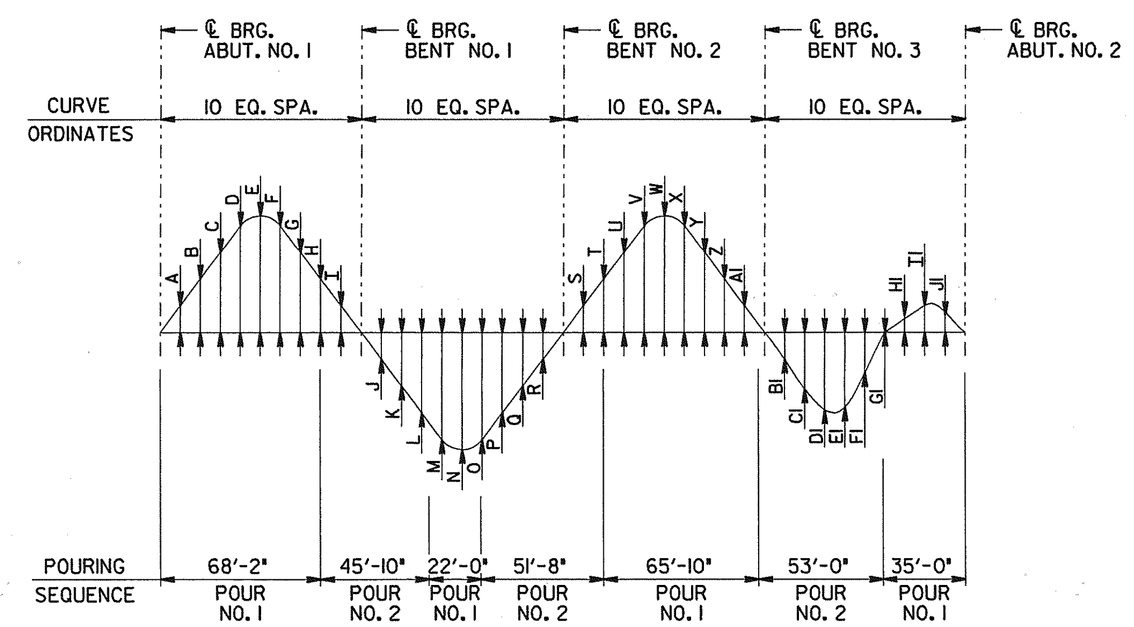

DEAD LOAD CORRECTION AND POURING SEQUENCE

(GIRDER NO. 1 AND NO. 2)

TABLE OF DIMENSIONS

	ITEM	A	B	C	D	E	F	G	H	I	J	K	L	M	N	O	P	Q	R	S	T	U	V	W	X	Y	Z	AI	BI	CI	DI	EI	FI	GI	HI	II	JI
TOTAL DEAD LOAD	GIRDER NO. 1	15/16"	1 3/4"	2 1/4"	2 9/16"	2 1/2"	2 1/4"	1 3/4"	1 1/8"	1/2"	-1/4"	-3/8"	-3/8"	-3/8"	-3/8"	-3/8"	-7/16"	-7/16"	-5/16"	3/4"	1 11/16"	2 9/16"	3 1/8"	3 5/16"	3 1/16"	2 7/16"	1 1/2"	5/8"	-3/16"	-1/4"	-1/4"	-3/16"	-1/16"	0	1/16"	1/16"	1/16"
	GIRDER NO. 2	15/16"	1 3/4"	2 1/4"	2 9/16"	2 1/2"	2 1/4"	1 3/4"	1 1/8"	1/2"	-1/4"	-3/8"	-3/8"	-3/8"	-3/8"	-3/8"	-7/16"	-7/16"	-5/16"	3/4"	1 11/16"	2 9/16"	3 1/8"	3 5/16"	3 1/16"	2 7/16"	1 1/2"	5/8"	-3/16"	-1/4"	-1/4"	-3/16"	-1/16"	0	1/16"	1/16"	1/16"
GIRDER DEAD LOAD	GIRDER NO. 1	1/8"	3/16"	1/4"	5/16"	5/16"	1/4"	3/16"	1/8"	1/16"	0	-1/16"	-1/16"	-1/16"	-1/16"	-1/16"	-1/16"	-1/16"	-1/16"	1/16"	3/16"	5/16"	3/8"	3/8"	3/8"	5/16"	3/16"	1/16"	0	0	0	0	0	0	0	0	0
	GIRDER NO. 2	1/8"	3/16"	1/4"	5/16"	5/16"	1/4"	3/16"	1/8"	1/16"	0	-1/16"	-1/16"	-1/16"	-1/16"	-1/16"	-1/16"	-1/16"	-1/16"	1/16"	3/16"	5/16"	3/8"	3/8"	3/8"	5/16"	3/16"	1/16"	0	0	0	0	0	0	0	0	0

DEAD LOAD CORRECTION CURVE: GIRDERS SHALL BE CAMBERED TO COMPENSATE FOR DEAD LOAD DEFLECTION AND VERTICAL CURVE.

DECK CONCRETE POURING SEQUENCE: ALL POURS SHALL BE MADE IN NUMERICAL SEQUENCE.

NOTE: POSITIVE DENOTES DOWNWARD DEFLECTION.

NOTE: IF PRESTRESSED DECK PANELS ARE USED AND THE BEAMS ARE PROFILED AFTER PANELS ARE IN PLACE, REDUCE THE DEAD LOAD CORRECTION VALUES SHOWN BY 25%.

NOTE: THE CONCRETE DECK SHALL NOT BE POURED UNTIL ALL STRUCTURAL STEEL IS ERECTED AND ALL WELDING OR BOLTING IS COMPLETE. THE CONTRACTOR SHALL MAKE ADEQUATE PROVISIONS DURING PLACEMENT OF THE SLAB TO PREVENT THE EXTERIOR BEAM FROM TWISTING. NO PORTION OF THE PARAPET SHALL BE POURED UNTIL THE ENTIRE SLAB IS IN PLACE.

STATE OF TENNESSEE
DEPARTMENT OF TRANSPORTATION

FRAMING PLAN
WIDENING OF INTERSTATE 40
OVER
HERMAN STREET AND
NASHVILLE AND WESTERN RAILROAD
STATION 107+33.78 (LOG MI. 16.62)
BRIDGE ID. NO. 19I00400061
DAVIDSON COUNTY
2002

M-427-33

DESIGNED BY L. MILLER DATE 12/01
DRAWN BY t. wilson DATE 12/01
SUPERVISED BY PETRONE DATE 12/01
CHECKED BY WILSON, PETRONE DATE 12/01

twilson
12/10/01
12:03:03
pw:D:\LOCALVFILL\BOND\2495\.583846\d583846d3.twilson.prf

CONST NO. 19005-3153-44

PROJECT NO.	YEAR	SHEET NO.
IM-40-4(73)206	2002	

REVISIONS

NO.	DATE	BY	BRIEF DESCRIPTION

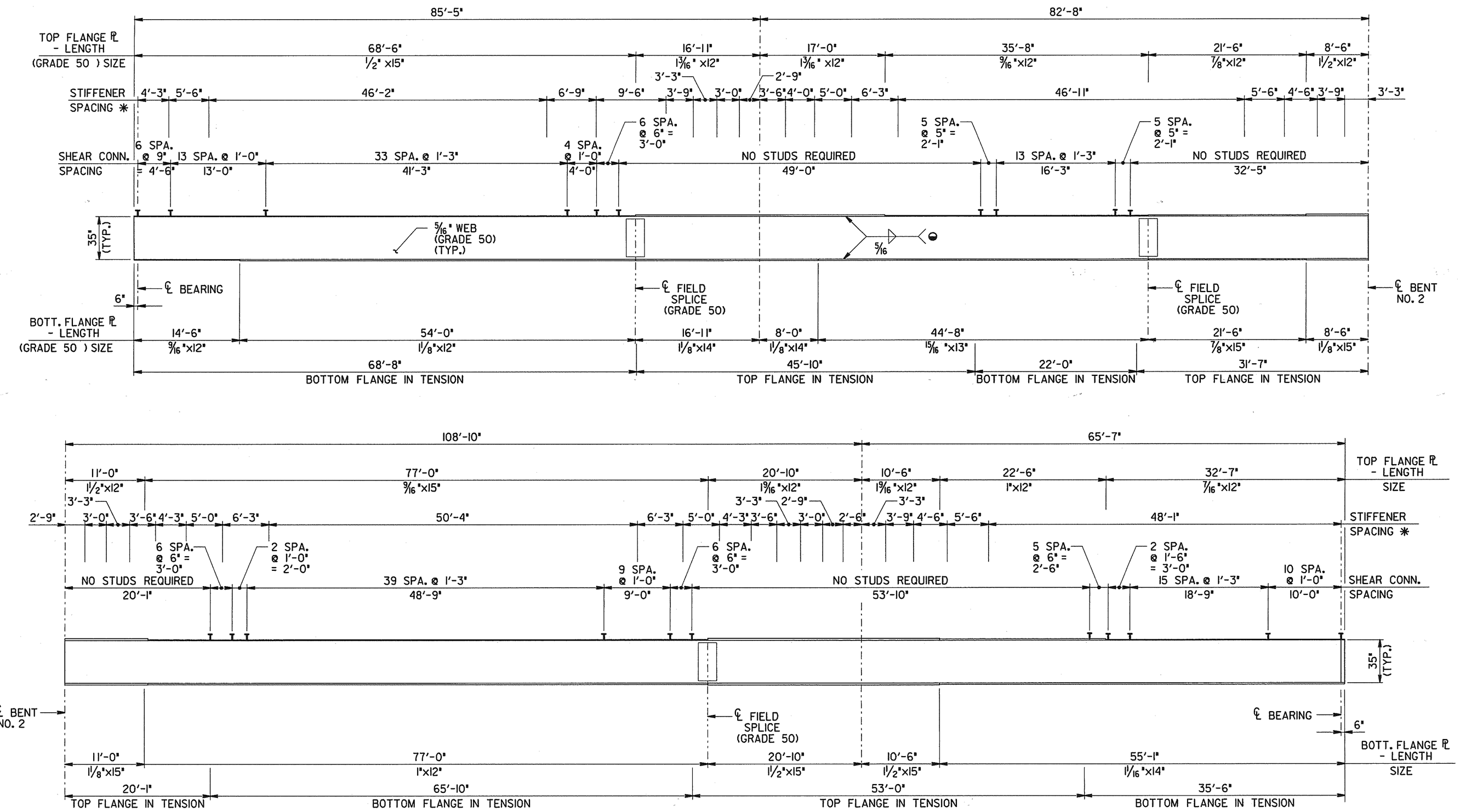

GIRDER ELEVATION

NOTE: FOR STIFFENER SPACINGS NOT SHOWN, SEE FRAMING PLAN.

* DENOTES: ADJUST SPACING SO AS TO COORDINATE WITH CROSS-FRAME CONNECTOR PLATE SPACING. CROSS-FRAME CONNECTOR PLATE TO SERVE AS STIFFENER AT CROSS-FRAME LOCATIONS.

◒ DENOTES: WELDS TO BE BUILT OUT TO OBTAIN FULL THROAT THICKNESS.

NOTES

APPROVAL OF MATERIALS: NO FABRICATION SHALL BE STARTED UNTIL THE MATERIALS INVOLVED HAVE BEEN APPROVED BY THE TENNESSEE DEPARTMENT OF TRANSPORTATION, DIVISION OF MATERIALS AND TESTS.

IDENTITY OF MAIN MATERIALS: SEE SECTION 602 OF THE STANDARD SPECIFICATIONS.

STRUCTURAL STEEL: SHALL CONFORM TO AASHTO M270 (ASTM A709) GRADE 36 UNLESS OTHERWISE NOTED. ALL STRUCTURAL STEEL FOR GIRDER FLANGES IN TENSION AND ALL WEBS SHALL MEET THE SUPPLEMENTAL REQUIREMENTS FOR LONGITUDINAL CHARPY V-NOTCH TESTS SPECIFIED IN AASHTO MATERIAL SPECIFICATIONS. ZONE 2 OF NON-FRACTURE CRITICAL CRITERIA SHALL APPLY.

WELDING: ANSI/AASHTO/AWS D1.5-95 BRIDGE WELDING CODE AND SECTION 602 OF THE STANDARD SPECIFICATIONS.

FIELD CONNECTIONS: SHALL BE 7/8" DIA. HIGH TENSILE STRENGTH BOLTS ASTM-A325 UNLESS OTHERWISE SHOWN. SEE AASHTO SPECIFICATIONS ART. 11.3.2 DIVISION II AND SECTION 602 OF THE STANDARD SPECIFICATIONS.

ADDITIONAL SHOP SPLICE NOTE: SHOP SPLICES NECESSARY DUE TO LENGTHS OR SIZE OF MATERIAL INVOLVED MAY BE ADDED BY THE FABRICATOR SUBJECT TO APPROVAL BY THE ENGINEER AND SHALL BE AT NO ADDITIONAL COST TO THE PROJECT.

ADDITIONAL FIELD SPLICE NOTE: FIELD SPLICES NECESSARY DUE TO LENGTHS INVOLVED MAY BE ADDED BY THE FABRICATOR SUBJECT TO APPROVAL BY THE ENGINEER AND SHALL BE AT NO ADDITIONAL COST TO THE PROJECT.

SHOP ASSEMBLY: PROGRESSIVE SHOP ASSEMBLY WILL BE ALLOWED. SEE AASHTO STANDARD SPECIFICATIONS FOR HIGHWAY BRIDGES, ART. 11.5.3.1 DIVISION II.

STATE OF TENNESSEE
DEPARTMENT OF TRANSPORTATION

STRUCTURAL STEEL DETAILS
WIDENING OF INTERSTATE 40
OVER
HERMAN STREET AND
NASHVILLE AND WESTERN RAILROAD
STATION 107+33.78 (LOG MI. 16.62)
BRIDGE ID. NO. 19I00400061
DAVIDSON COUNTY
2002

M-427-34

DESIGNED BY L. MILLER DATE 12/01
DRAWN BY t. wilson DATE 12/01
SUPERVISED BY PETRONE DATE 12/01
CHECKED BY WILSON, PETRONE DATE 12/01

twilson
12/10/01
Plot 1:1
Plot 1 copies
D:\LOCAL\WILL\BRIDG\2495\083846\83846sti.twwilson.prt

CONST NO. 19005-3153-44

PROJECT NO.	YEAR	SHEET NO.
IM-40-4(73)206	2002	

REVISIONS

NO.	DATE	BY	BRIEF DESCRIPTION

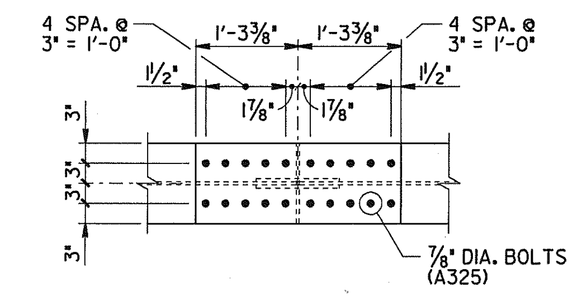

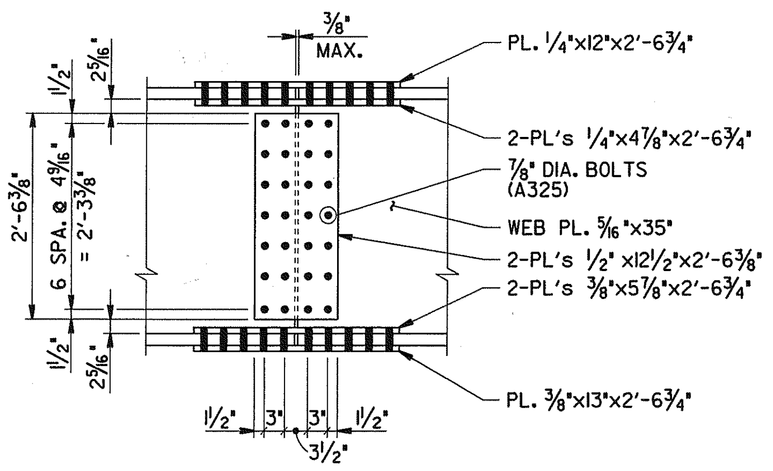

GIRDER FIELD SPLICE

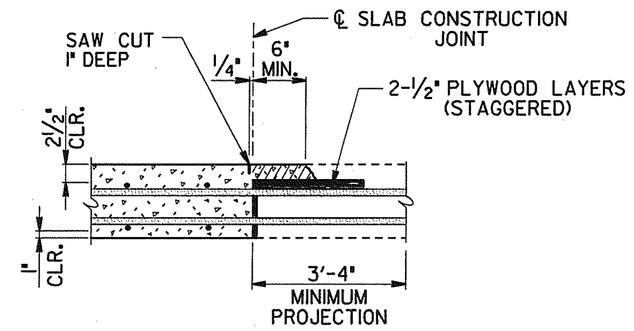

TRANSVERSE SLAB CONSTRUCTION JOINT DETAIL

NOTE: THE CONTRACTOR SHALL MAKE ADEQUATE PROVISIONS DURING PLACEMENT OF SLAB TO PREVENT THE EXTERIOR BEAM FROM TWISTING. NO EQUIPMENT SHALL BE PERMITTED ON THE BRIDGE UNTIL ALL POURS ARE MADE AND THE CONCRETE IS PROPERLY CURED.

NOTE: ALL SLAB CONSTRUCTION JOINTS SHALL BE IN ACCORDANCE WITH THE SLAB CONSTRUCTION JOINT DETAIL.

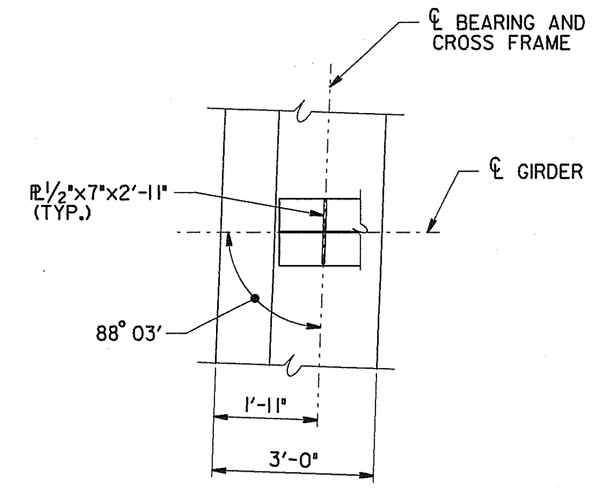

PLAN AT ABUTMENT

(SHOWING BEARING STIFFENER)

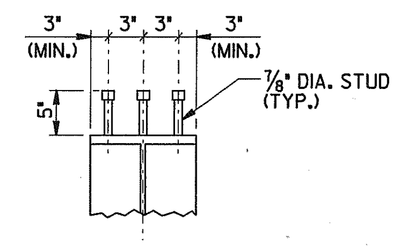

STUD DETAIL

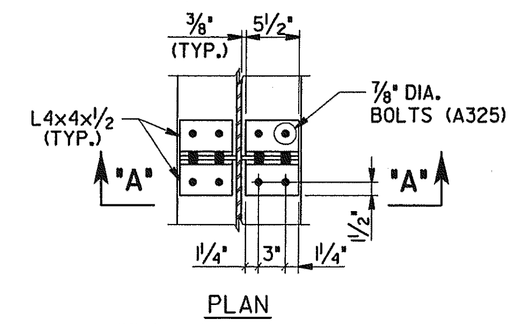

PLAN

(TYP. AT TENSION FLANGE)

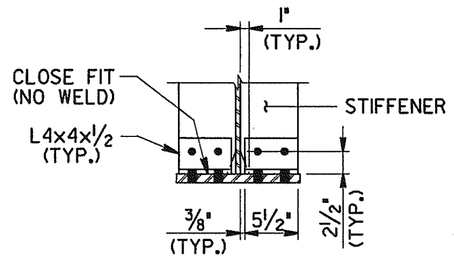

SECTION "A-A"

DETAIL "A"

BOLTS TO BE TORQUED TO AASHTO SPEC. FOR FRICTION CONNECTION.

CLOSE FIT IS AS DEFINED IN AWS D1.1

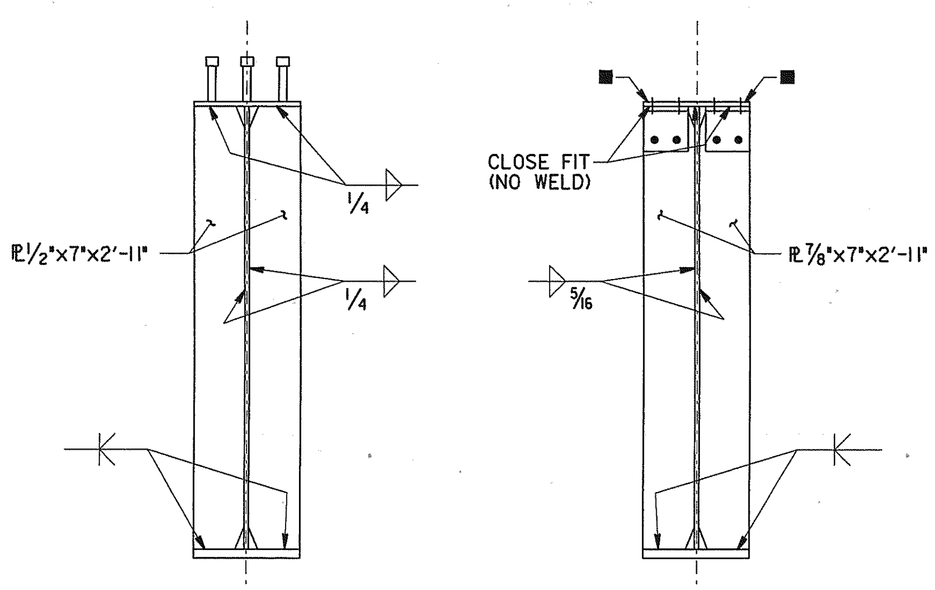

AT ABUTMENTS

AT BENT (TOP FLANGE IN TENSION)

BEARING STIFFENER DETAILS

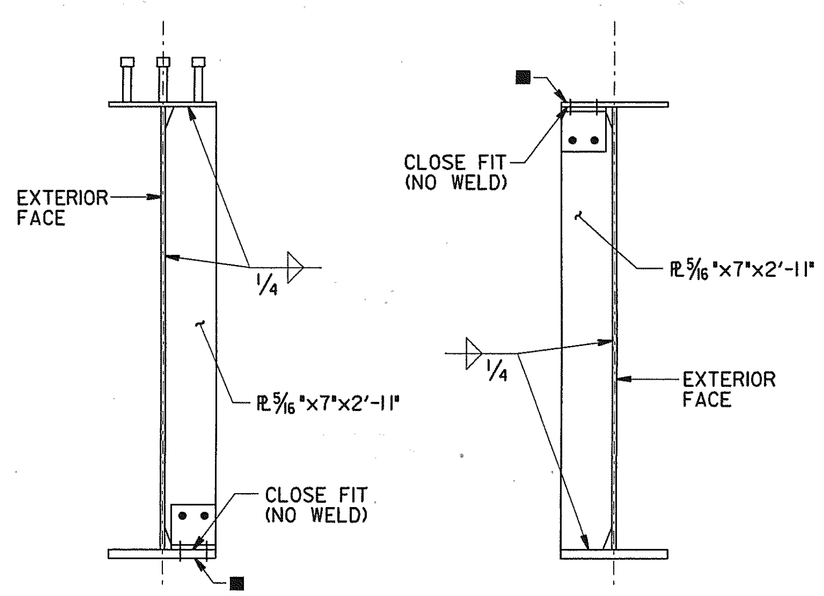

BOT. FLANGE IN TENSION

TOP FLANGE IN TENSION

CROSS FRAME CONNECTOR PLATES

■ DENOTES: SEE DETAIL "A", FOR TENSION FLANGE CONNECTION AND TYPICAL STIFFENER CLIP DIMENSIONS.

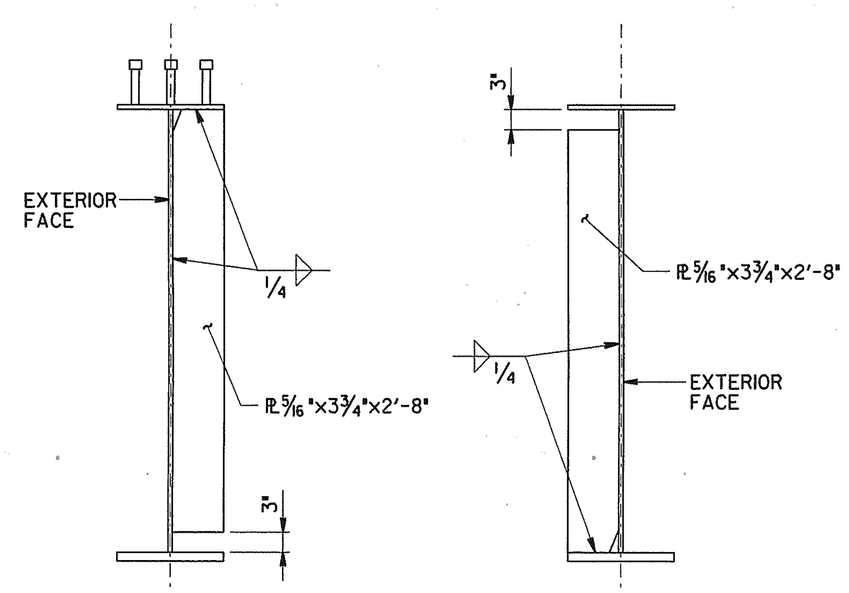

BOT. FLANGE IN TENSION

TOP FLANGE IN TENSION

INTERMEDIATE STIFFENER DETAILS

STATE OF TENNESSEE
DEPARTMENT OF TRANSPORTATION

STRUCTURAL STEEL DETAILS
WIDENING OF INTERSTATE 40
OVER
HERMAN STREET AND
NASHVILLE AND WESTERN RAILROAD
STATION 107+33.78 (LOG MI. 16.62)
BRIDGE ID. NO. 19I00400061
DAVIDSON COUNTY
2002

LARRY W. MILLER
REGISTERED ENGINEER
No. 022283
STATE OF TENNESSEE
12/10/01

M-427-35

DESIGNED BY L. MILLER DATE 12/01
DRAWN BY t. wilson DATE 12/01
SUPERVISED BY PETRONE DATE 12/01
CHECKED BY WILSON, PETRONE DATE 12/01

twilson
12/10/01
10:07 am
Plot Scale: 1
DN:\Local\TEL\BDNDN2495\583846.83846ss2.twilson.pr1

CONST NO. 19005-3153-44

PROJECT NO.	YEAR	SHEET NO.
IM-40-4(73)206	2002	

REVISIONS

NO.	DATE	BY	BRIEF DESCRIPTION

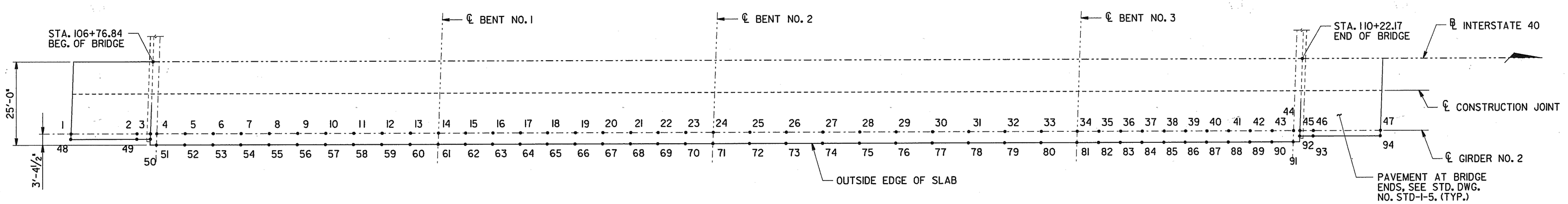

BRIDGE SCREED PLAN

TABLE OF STATIONS AND ELEVATIONS

POINT	STATION	ELEVATION	POINT	STATION	ELEVATION	POINT	STATION	ELEVATION	POINT	STATION	ELEVATION
1	106+52.10	453.90	25	108+56.49	455.69	49	106+72.05	453.92	73	108+67.25	455.84
2	106+72.10	453.93	26	108+67.37	455.87	50	106+76.05	453.93	74	108+78.14	456.03
3	106+76.10	453.94	27	108+78.25	456.07	51	106+77.91	453.92	75	108+89.02	456.23
4	106+78.02	453.96	28	108+89.14	456.27	52	106+84.67	453.94	76	108+99.90	456.44
5	106+84.79	453.97	29	109+00.02	456.48	53	106+93.35	453.97	77	109+10.79	456.66
6	106+93.47	454.01	30	109+10.90	456.69	54	107+02.04	454.01	78	109+21.67	456.88
7	107+02.15	454.05	31	109+21.78	456.92	55	107+10.72	454.06	79	109+32.55	457.12
8	107+10.84	454.09	32	109+32.67	457.16	56	107+19.40	454.11	80	109+43.44	457.36
9	107+19.52	454.14	33	109+43.55	457.40	57	107+28.09	454.16	81	109+54.32	457.62
10	107+28.20	454.20	34	109+54.43	457.65	58	107+36.77	454.23	82	109+61.02	457.78
11	107+36.88	454.26	35	109+61.13	457.82	59	107+45.45	454.29	83	109+67.72	457.95
12	107+45.57	454.33	36	109+67.83	457.98	60	107+54.14	454.37	84	109+74.42	458.11
13	107+54.25	454.40	37	109+74.53	458.15	61	107+62.82	454.45	85	109+81.12	458.27
14	107+62.93	454.48	38	109+81.23	458.31	62	107+71.08	454.53	86	109+87.82	458.43
15	107+71.20	454.56	39	109+87.93	458.47	63	107+79.35	454.61	87	109+94.52	458.60
16	107+79.47	454.65	40	109+94.63	458.63	64	107+87.62	454.70	88	110+01.22	458.76
17	107+87.73	454.74	41	110+01.33	458.80	65	107+95.89	454.80	89	110+07.92	458.92
18	107+96.00	454.84	42	110+08.03	458.96	66	108+04.15	454.90	90	110+14.62	459.09
19	108+04.27	454.94	43	110+14.73	459.12	67	108+12.42	455.01	91	110+19.40	459.20
20	108+12.54	455.04	44	110+19.52	459.24	68	108+20.69	455.12	92	110+21.38	459.27
21	108+20.80	455.15	45	110+21.43	459.29	69	108+28.95	455.23	93	110+25.38	459.37
22	108+29.07	455.27	46	110+25.43	459.39	70	108+37.22	455.35	94	110+45.38	459.85
23	108+37.34	455.39	47	110+45.43	459.87	71	108+45.49	455.48			
24	108+45.60	455.52	48	106+52.05	453.88	72	108+56.37	455.65			

LARRY W. MILLER
REGISTERED ENGINEER
BRIDGE
No. 022024
12/10/01
STATE OF TENNESSEE

STATE OF TENNESSEE
DEPARTMENT OF TRANSPORTATION

BRIDGE SCREED
WIDENING OF INTERSTATE 40
OVER
HERMAN STREET AND
NASHVILLE AND WESTERN RAILROAD
STATION 107+33.78 (LOG MI. 16.62)
BRIDGE ID. NO. 19I0040006I
DAVIDSON COUNTY
2002

M-427-36

DESIGNED BY L. MILLER DATE 12/01
DRAWN BY t. wilson DATE 12/01
SUPERVISED BY PETRONE DATE 12/01
CHECKED BY WILSON, PETRONE DATE 12/01

twilson
12/03/01
8:09:01 am
Pw:\\Localus\Locala\Nashville\50ND\2495\153846\83846scr-twilson.prf

CONST NO. 19005-3153-44

PROJECT NO.	YEAR	SHEET NO.
IM-40-4(73)206	2002	

REVISIONS

NO.	DATE	BY	BRIEF DESCRIPTION
1	1-10-02	W.A.P.	ADDED RISER BLOCK PLAN VIEW

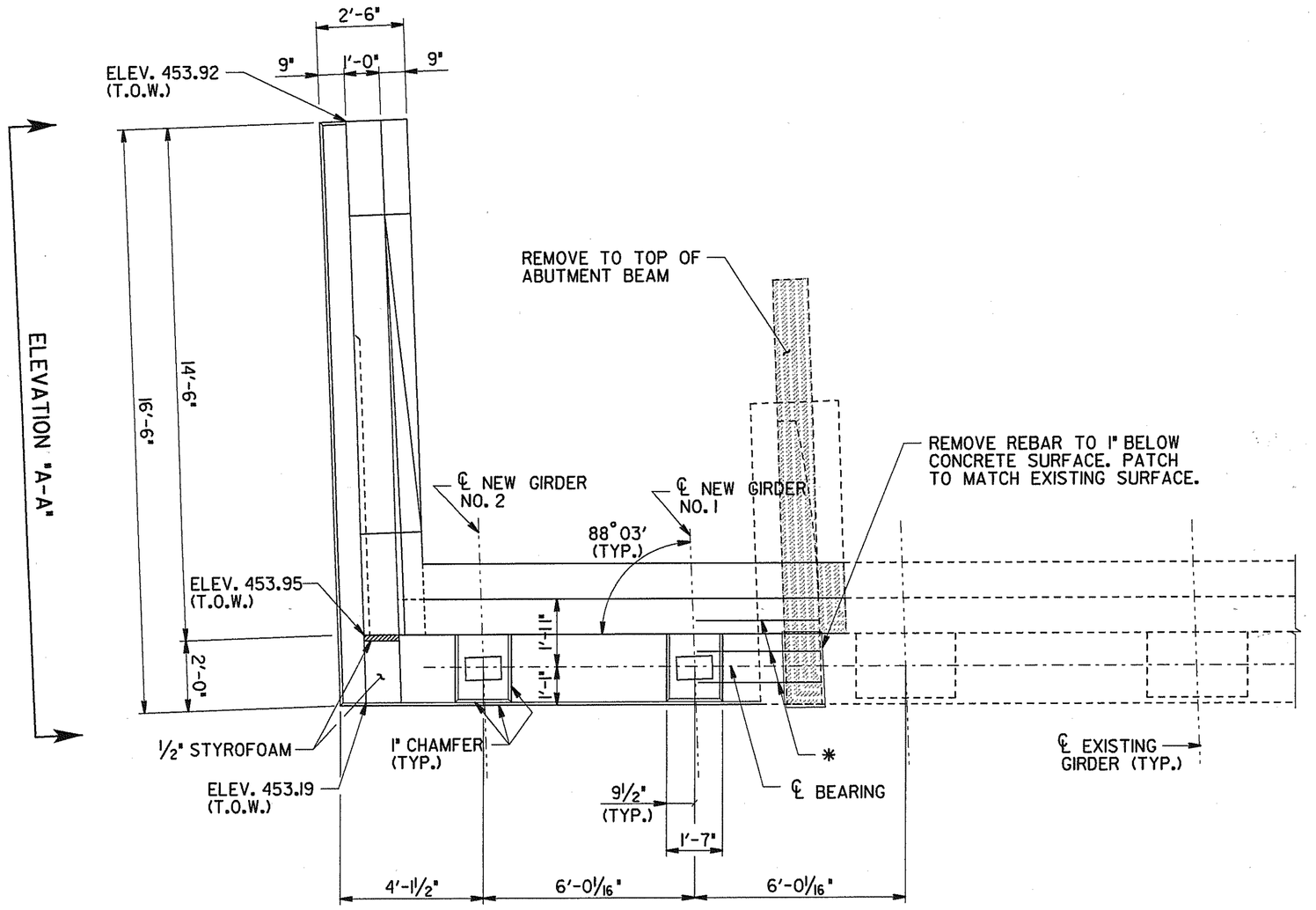

PLAN

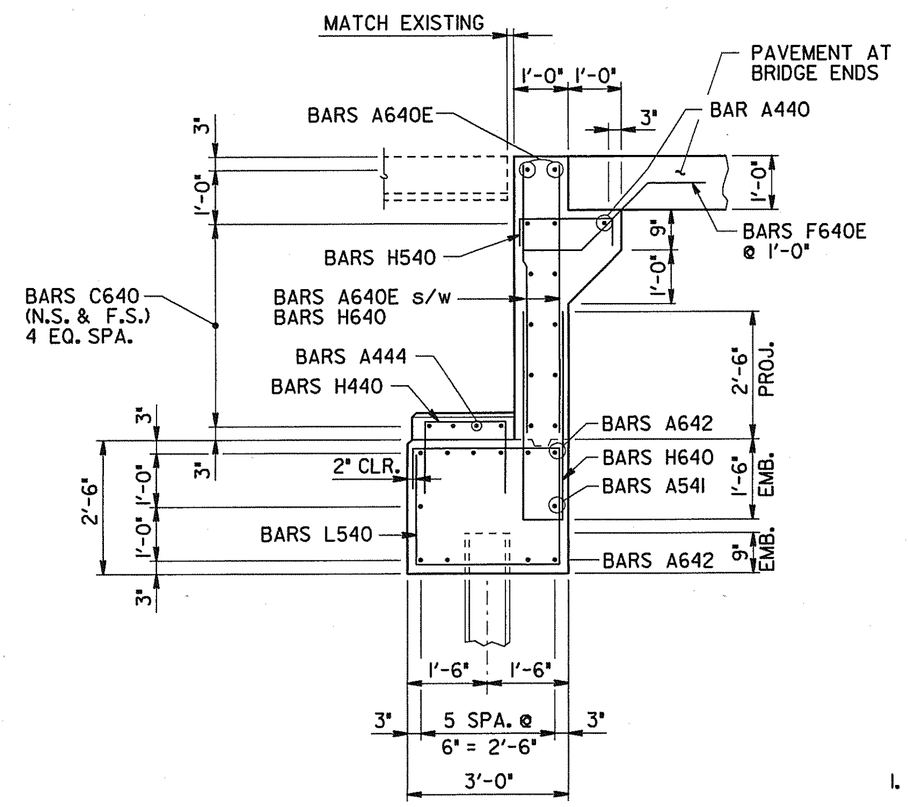

SECTION "B-B"

NOTES:

1. E - INDICATES BARS TO BE EPOXY COATED.
   N.S. - INDICATES NEAR SIDE
   F.S. - INDICATES FAR SIDE
   E.F. - INDICATES EACH FACE
2. WHEN POURING THE WINGWALLS, PROVISIONS SHALL BE MADE FOR SETTING REINFORCING STEEL FOR THE WINGPOSTS AND PARAPETS. FOR DETAILS OF WINGPOSTS AND PARAPETS SEE STANDARD DWG. STD-1-1.
3. RISER BLOCKS TO BE POURED MONOLITHCALLY WITH ABUTMENT BEAM.
4. BRIDGE SEAT ELEVATIONS ARE GIVEN AT THE INTERSECTION OF ℄ GIRDER AND ℄ BEARING.
5. FOR DRAINAGE DETAILS, SEE STD. DWG. NO. STD-10-1.
6. SEE STD. DWG. STD-6-1 FOR PILE DETAILS AND NOTES.
7. COST OF BRIDGE RAIL AND POST IS TO BE INCLUDED IN THE UNIT PRICE BID FOR THE BRIDGE RAIL SYSTEM.
8. DASH LINES INDICATE EXISTING ABUTMENT.
9. THE GIRDERS SHALL BE IN PLACE PRIOR TO POURING THE ABUTMENT BACKWALL. AT LEAST THE TOP 12 INCHES OF THE BACKWALL SHALL BE POURED CONCURRENTLY THE EXPANSION JOINT CLOSURE POUR.
10. TOP OF APRON WALL TO CONFORM TO BOTTOM OF ROADWAY SLAB.

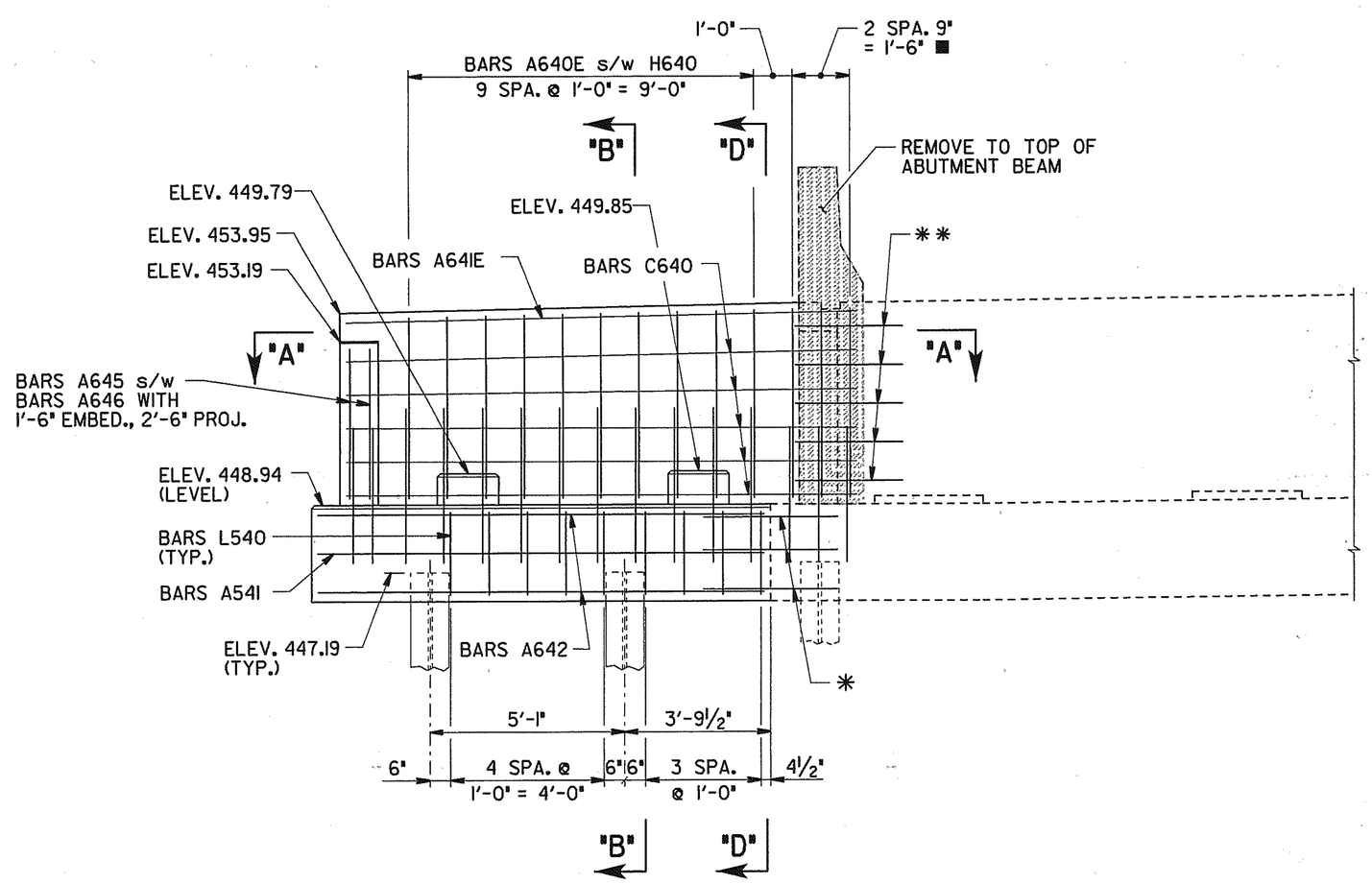

ELEVATION

(LOOKING BACK ON SURVEY)

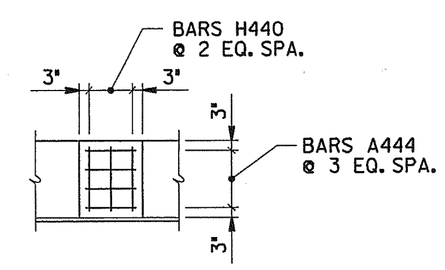

TYPICAL PLAN OF RISER BLOCK △1

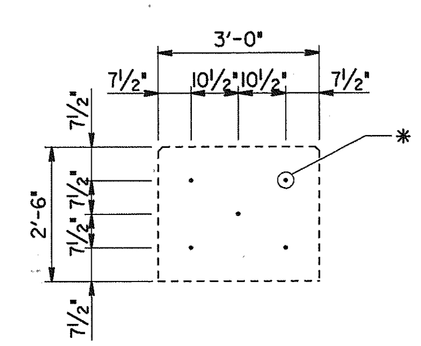

SECTION "D-D"

✱ INDICATES BARS DRILLED AND GROUTED INTO EXISTING CAP BEAM WITH 1'-9" EMBEDMENT. (BARS A641)

ESTIMATED QUANTITIES

CLASS "A" CONCRETE (BRIDGES) C.Y.	REINFORCING STEEL LBS.	EPOXY COATED REINFORCING STEEL LBS.
14	1,985	338

△1 INDICATES: RISER BLOCK TO BE REINFORCED, SEE SECTION "B-B".

✱✱ INDICATES: BARS A540 @ 1'-0" MAX. DRILLED AND GROUTED INTO EXISTING ENDWALL WITH 1'-0" EMBEDMENT.

■ INDICATES: BARS A640E s/w BARS A643 (DRILL AND GROUT) WITH 1'-6" EMBED., 2'-6" PROJ.

✱ INDICATES: BARS DRILLED AND GROUTED INTO EXISTING ABUTMENT BEAM WITH 1'-9" EMBEDMENT. (BARS A641)

DESIGNED BY	L. MILLER	DATE	12/01
DRAWN BY	t. wilson	DATE	12/01
SUPERVISED BY	PETRONE	DATE	12/01
CHECKED BY	WILSON, PETRONE	DATE	12/01

STATE OF TENNESSEE
DEPARTMENT OF TRANSPORTATION

ABUTMENT NO. 1
WIDENING OF INTERSTATE 40
OVER
HERMAN STREET AND
NASHVILLE AND WESTERN RAILROAD
STATION 107+33.78 (LOG MI. 16.62)
BRIDGE ID. NO. 19I0040006I
DAVIDSON COUNTY
2002

LARRY W. MILLER REGISTERED ENGINEER No. 022264 STATE OF TENNESSEE

M-427-37

twilson
17:09, 2
09/05/05
Microstation V8
D:\LOCAL\FILL\90\D\27163_153846_83846ab_twilson.dgn

CONST NO. 19005-3153-44

PROJECT NO.	YEAR	SHEET NO.
IM-40-4(73)206	2002	

REVISIONS

NO.	DATE	BY	BRIEF DESCRIPTION

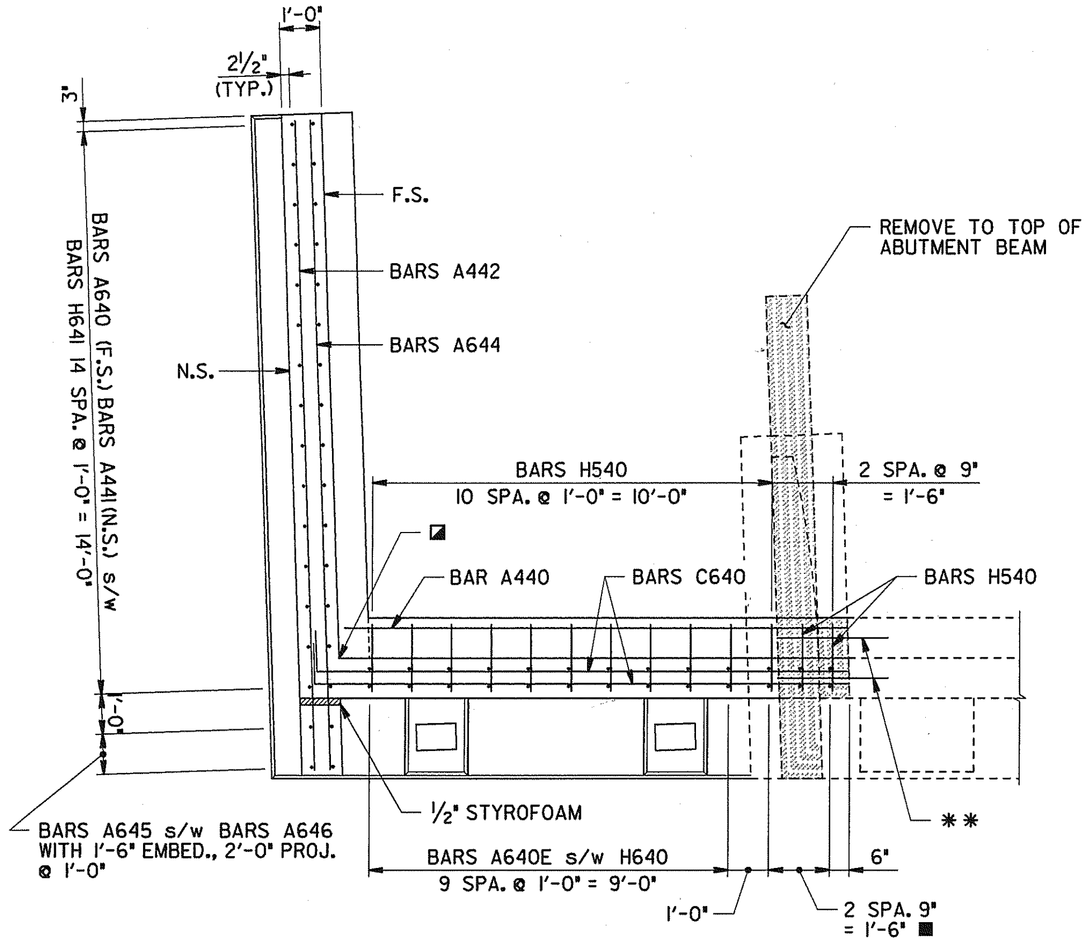

SECTION "A-A"

■ DENOTES: BARS A640E s/w BARS A643 (DRILL AND GROUT) WITH 1'-6" EMBED., 2'-6" PROJ.

** INDICATES: BARS A540 @ 1'-0" MAX. DRILLED AND GROUTED INTO EXISTING ENDWALL WITH 1'-0" EMBEDMENT.

◪ INDICATES ½"x3" BITUMINOUS FIBERBOARD SECURELY BONDED TO CONCRETE SURFACE TO RUN FROM TOP OF ABUTMENT BEAM TO BOTTOM OF ROADWAY BRACKET.

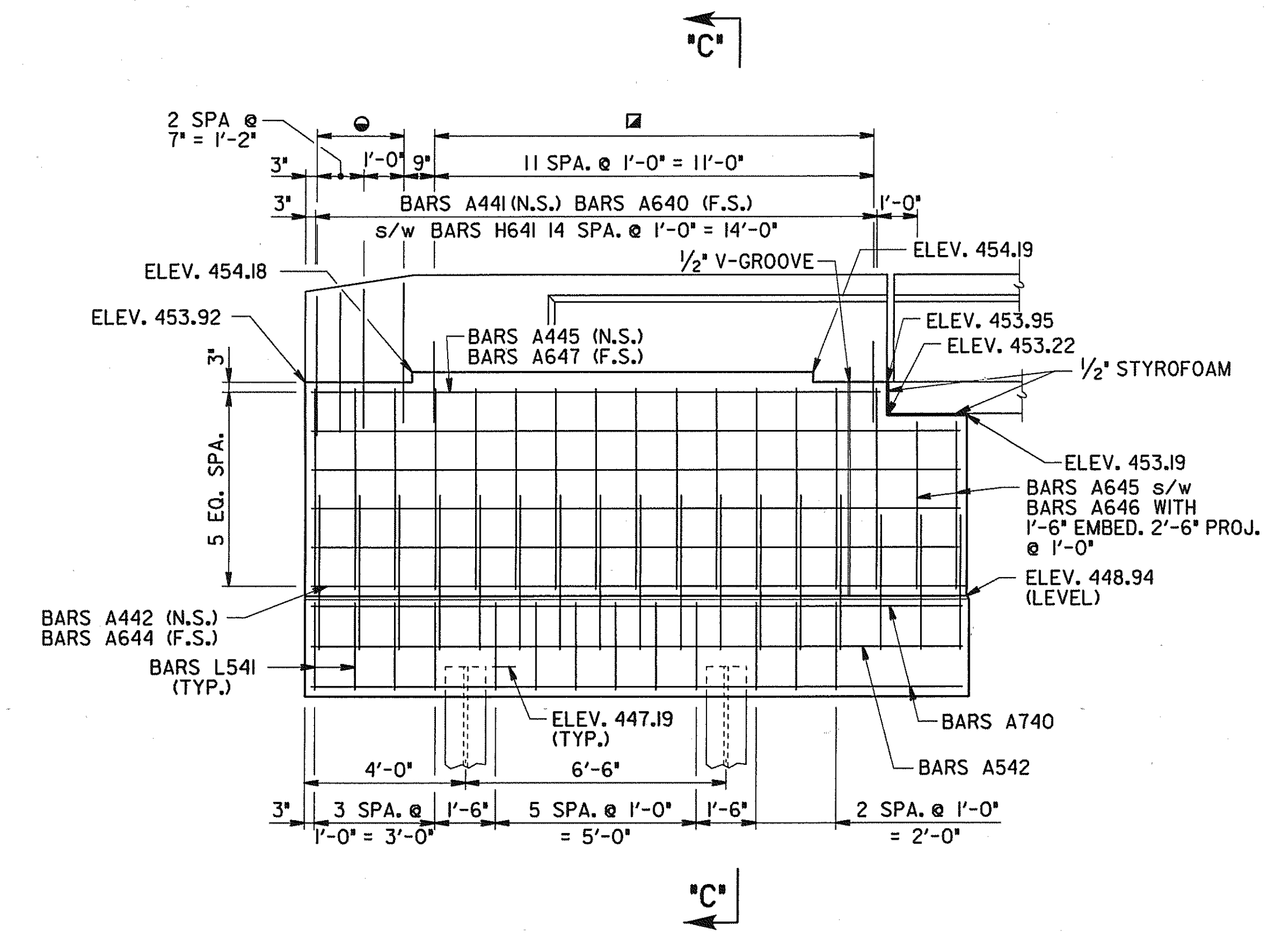

ELEVATION "A-A"

◒ DENOTES: BARS A470E (E.F.)

◪ DENOTES: BARS B470E (E.F.)

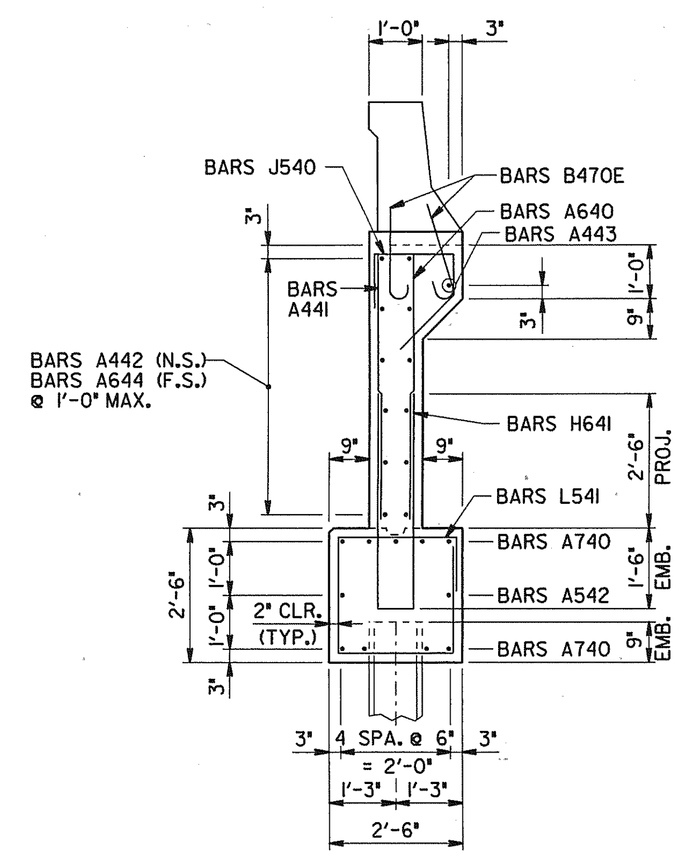

SECTION "C-C"

STATE OF TENNESSEE
DEPARTMENT OF TRANSPORTATION

ABUTMENT NO. 1 DETAILS
WIDENING OF INTERSTATE 40
OVER
HERMAN STREET AND
NASHVILLE AND WESTERN RAILROAD
STATION 107+33.78 (LOG MI. 16.62)
BRIDGE ID. NO. 19I00400061
DAVIDSON COUNTY
2002

M-427-38

DESIGNED BY L. MILLER DATE 12/01
DRAWN BY t. wilson DATE 12/01
SUPERVISED BY PETRONE DATE 12/01
CHECKED BY WILSON, PETRONE DATE 12/01

twilson
12/10/01
Plot: 2 copies 1
Plot: D:\LOCAL\FULL\BRNOV2495L.SB3846.B3846adl.twilson.pr f

CONST NO. 19005-3153-44

PROJECT NO.	YEAR	SHEET NO.
IM-40-4(73)206	2002	

REVISIONS

NO.	DATE	BY	BRIEF DESCRIPTION
1	1-10-02	W.A.P.	ADDED RISER BLOCK PLAN VIEW

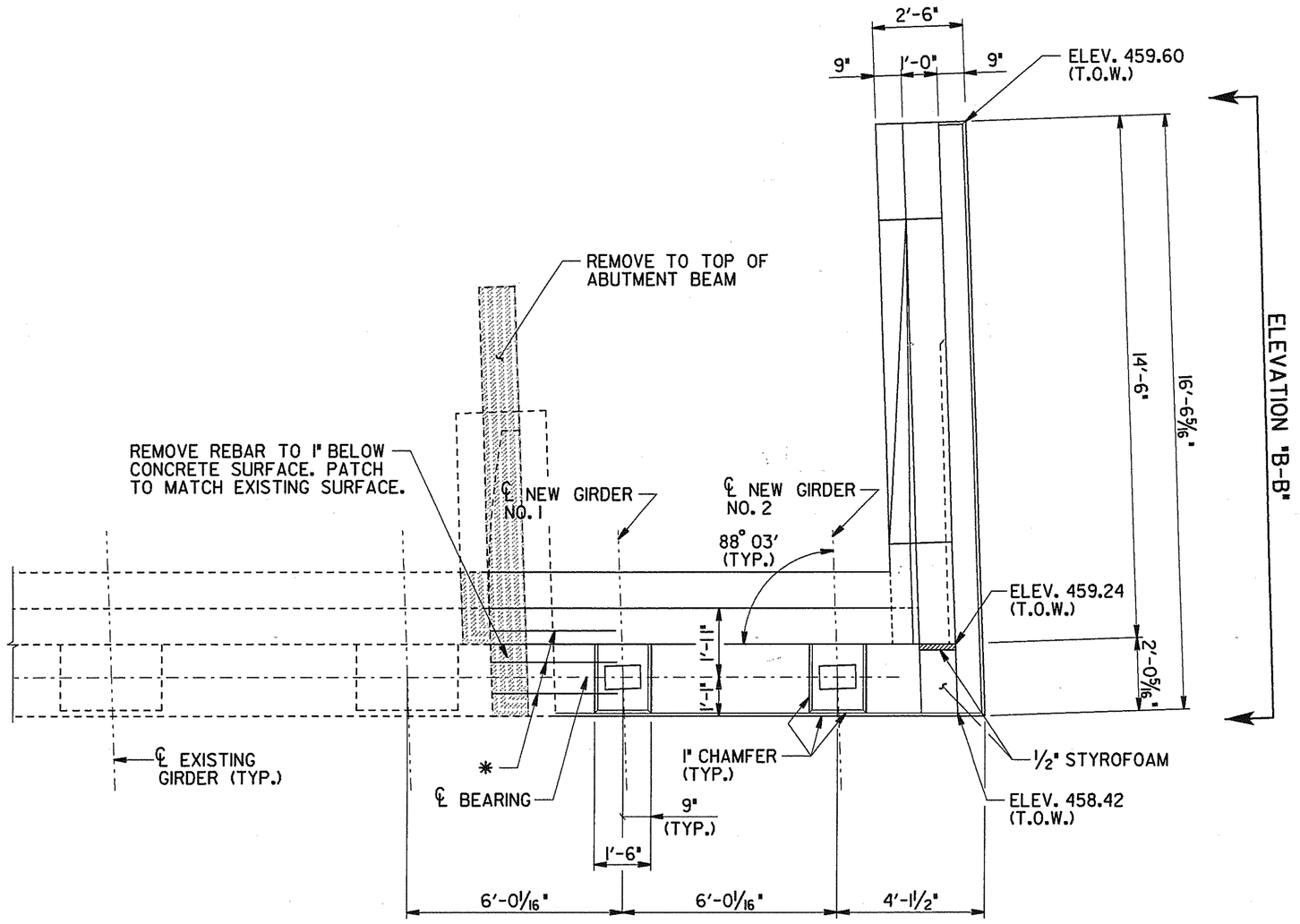

PLAN

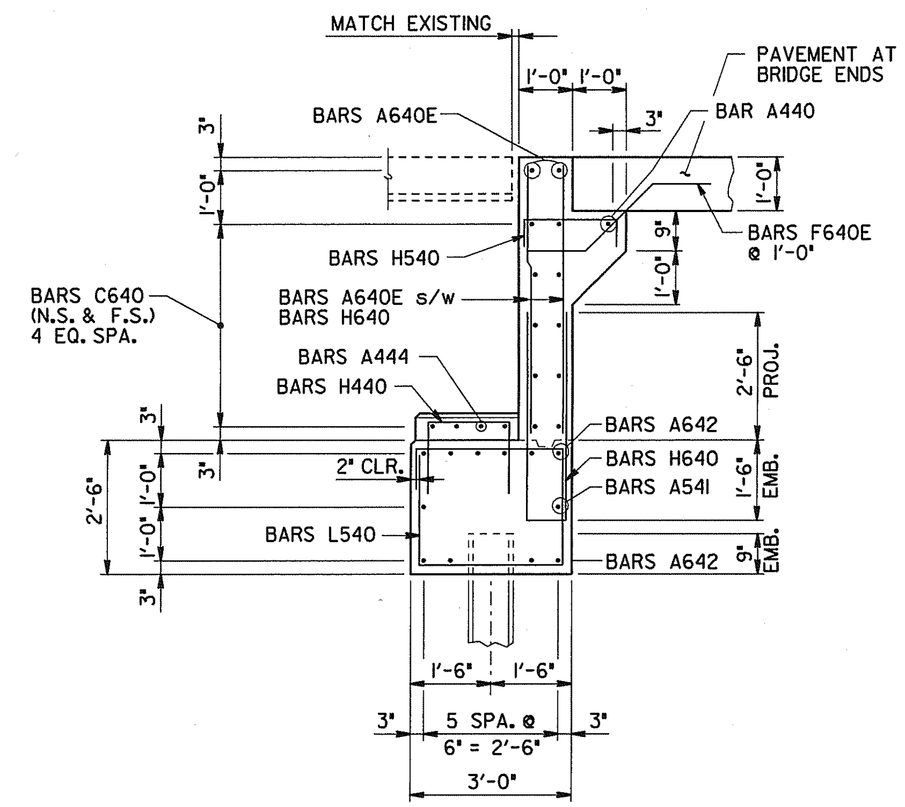

SECTION "B-B"

NOTES:

1. E - INDICATES BARS TO BE EPOXY COATED.
   N.S. - INDICATES NEAR SIDE
   F.S. - INDICATES FAR SIDE
   E.F. - INDICATES EACH FACE
2. WHEN POURING THE WINGWALLS, PROVISIONS SHALL BE MADE FOR SETTING REINFORCING STEEL FOR THE WINGPOSTS AND PARAPETS. FOR DETAILS OF WINGPOSTS AND PARAPETS SEE STANDARD DWG. STD-1-1.
3. RISER BLOCKS TO BE POURED MONOLITHCALLY WITH ABUTMENT BEAM.
4. BRIDGE SEAT ELEVATIONS ARE GIVEN AT THE INTERSECTION OF ℄ GIRDER AND ℄ BEARING.
5. FOR DRAINAGE DETAILS, SEE STD. DWG. NO. STD-10-1.
6. SEE STD. DWG. STD-6-1 FOR PILE DETAILS AND NOTES.
7. COST OF BRIDGE RAIL AND POST IS TO BE INCLUDED IN THE UNIT PRICE BID FOR THE BRIDGE RAIL SYSTEM.
8. DASH LINES INDICATE EXISTING ABUTMENT.
9. RISER BLOCK BEARING PAD SURFACES TO CONFORM TO BOTTOM OF BEAM GRADE.

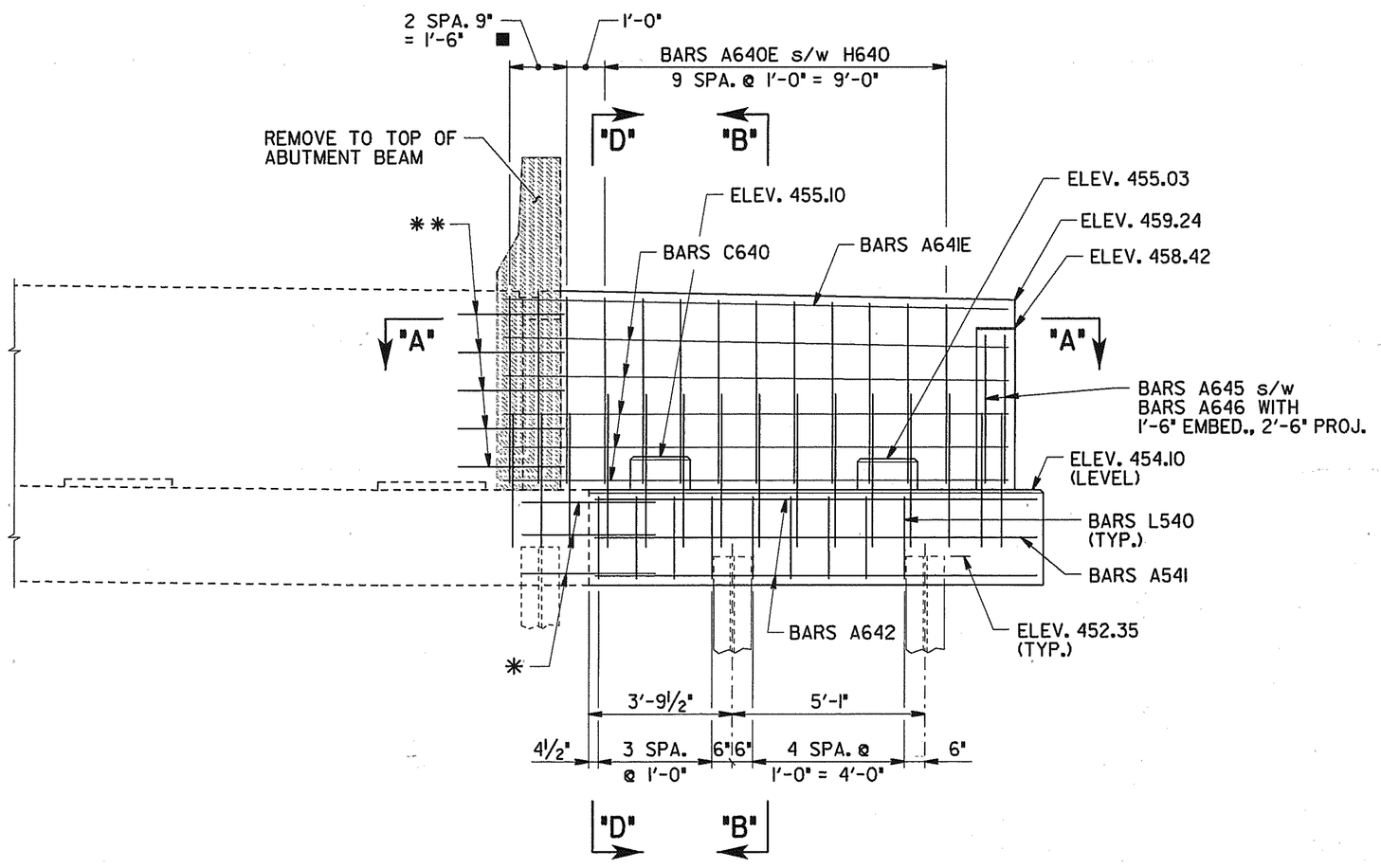

ELEVATION

(LOOKING BACK ON SURVEY)

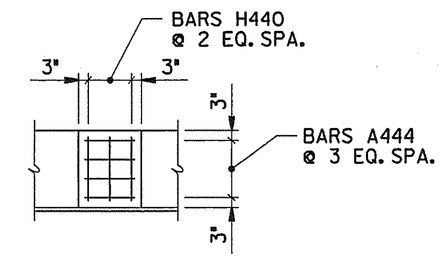

TYPICAL PLAN OF RISER BLOCK △1

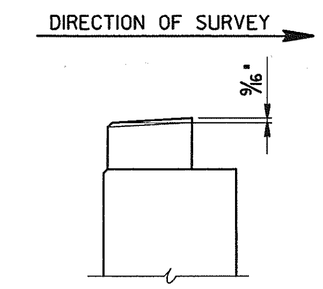

RISER BLOCK SLOPE DETAILS

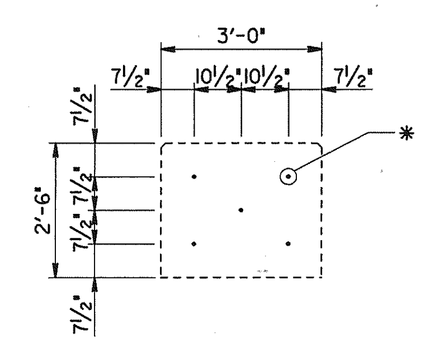

SECTION "D-D"

✱ INDICATES BARS DRILLED AND GROUTED INTO EXISTING CAP BEAM WITH 1'-9" EMBEDMENT. (BARS A641)

ESTIMATED QUANTITIES

CLASS "A" CONCRETE (BRIDGES) C.Y.	REINFORCING STEEL LBS.	EPOXY COATED REINFORCING STEEL LBS.
14	1,985	338

△ INDICATES: RISER BLOCK TO BE REINFORCED, SEE SECTION "B-B".

✱✱ INDICATES: BARS A540 @ 1'-0" MAX. DRILLED AND GROUTED INTO EXISTING ENDWALL WITH 1'-0" EMBEDMENT.

■ INDICATES: BARS A640E s/w BARS A643 (DRILL AND GROUT) WITH 1'-6" EMBED., 2'-6" PROJ.

✱ INDICATES: BARS DRILLED AND GROUTED INTO EXISTING ABUTMENT BEAM WITH 1'-9" EMBEDMENT. (BARS A641)

STATE OF TENNESSEE
DEPARTMENT OF TRANSPORTATION

ABUTMENT NO. 2
WIDENING OF INTERSTATE 40
OVER
HERMAN STREET AND
NASHVILLE AND WESTERN RAILROAD
STATION 107+33.78 (LOG MI. 16.62)
BRIDGE ID. NO. 19I00400061
DAVIDSON COUNTY
2002

M-427-39

DESIGNED BY L. MILLER DATE 12/01
DRAWN BY t. wilson DATE 12/01
SUPERVISED BY PETRONE DATE 12/01
CHECKED BY WILSON, PETRONE DATE 12/01

TWilson
1/15/02
Plot - Icopies
DN:\LOCAL\STILL\BRDNOV2760.5B3846.B3846do2.TWilson.prf

CONST NO. 19005-3153-44

PROJECT NO.	YEAR	SHEET NO.
IM-40-4(73)206	2002	

REVISIONS

NO.	DATE	BY	BRIEF DESCRIPTION

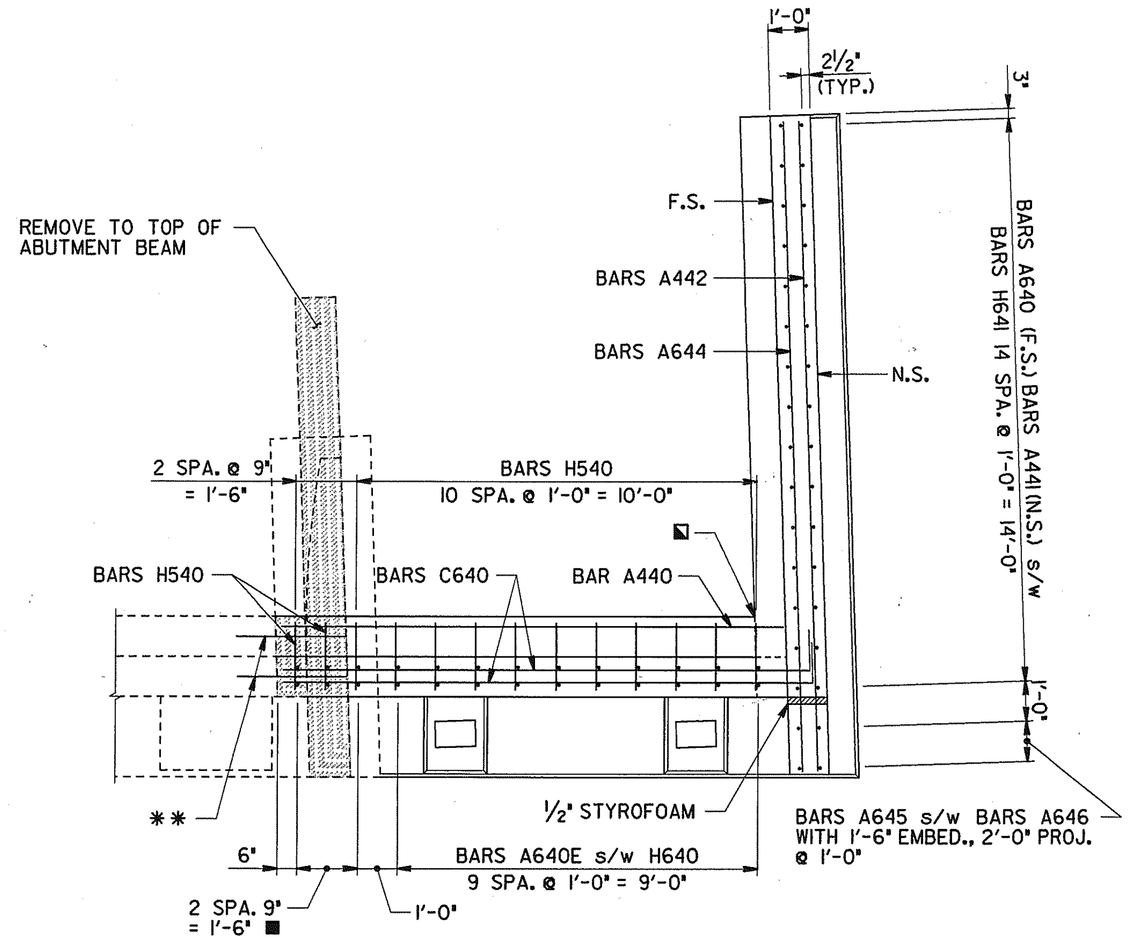

SECTION "A-A"

■ DENOTES: BARS A640E s/w BARS A643 (DRILL AND GROUT) WITH 1'-6" EMBED., 2'-6" PROJ.

** INDICATES: BARS A540 @ 1'-0" MAX. DRILLED AND GROUTED INTO EXISTING ENDWALL WITH 1'-0" EMBEDMENT.

◪ INDICATES ½"x3" BITUMINOUS FIBERBOARD SECURELY BONDED TO CONCRETE SURFACE TO RUN FROM TOP OF ABUTMENT BEAM TO BOTTOM OF ROADWAY BRACKET.

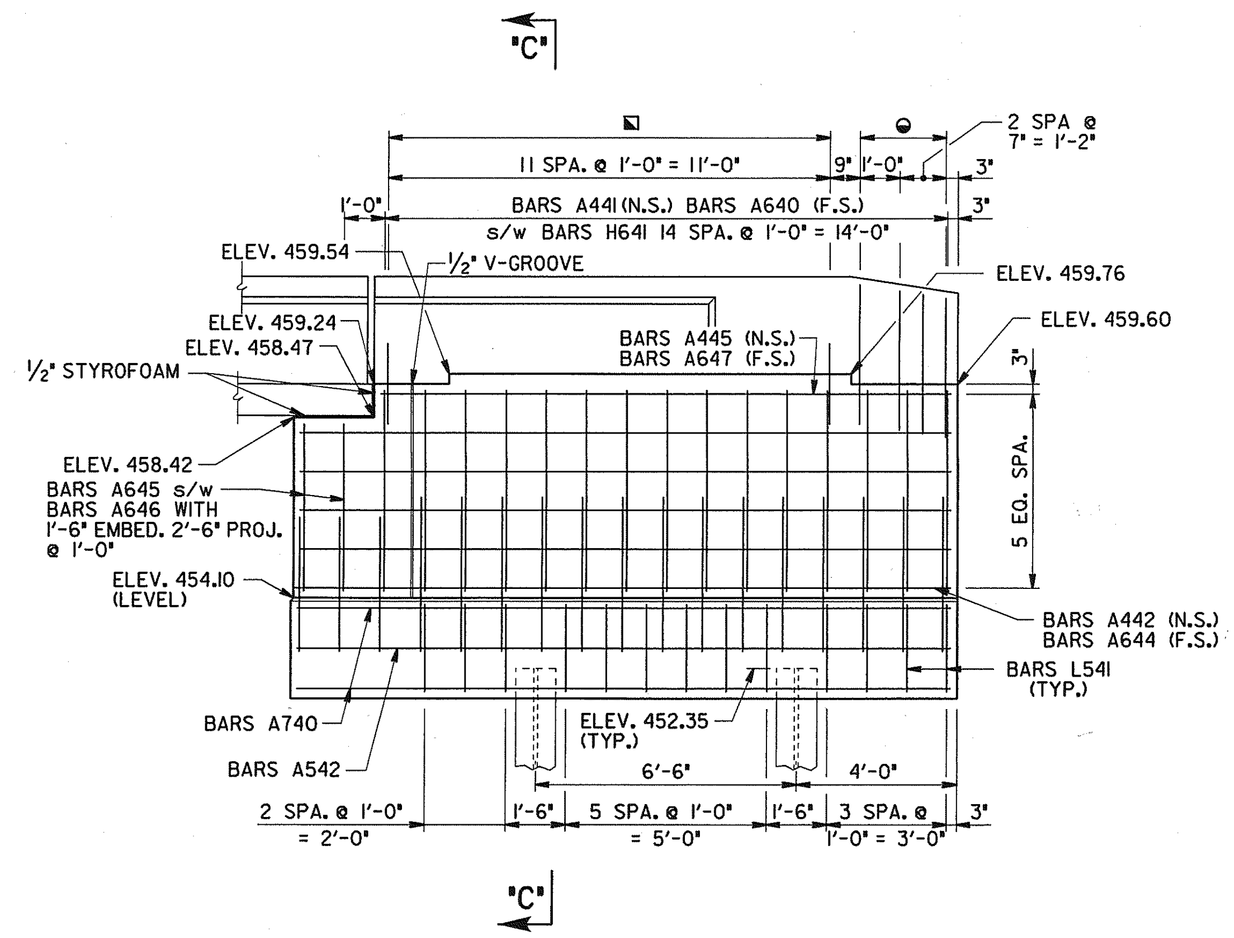

ELEVATION "B-B"

◒ DENOTES: BARS A470E (E.F.)

◪ DENOTES: BARS B470E (E.F.)

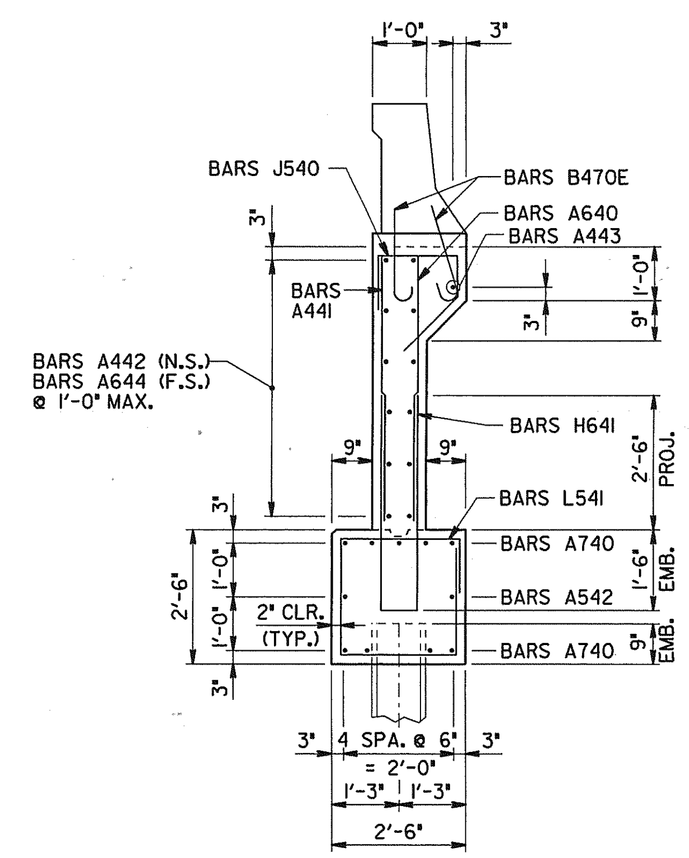

SECTION "C-C"

STATE OF TENNESSEE
DEPARTMENT OF TRANSPORTATION

ABUTMENT NO. 2 DETAILS
WIDENING OF INTERSTATE 40
OVER
HERMAN STREET AND
NASHVILLE AND WESTERN RAILROAD
STATION 107+33.78 (LOG MI. 16.62)
BRIDGE ID. NO. 19I00400061
DAVIDSON COUNTY
2002

M-427-40

DESIGNED BY	L. MILLER	DATE	12/01
DRAWN BY	t. wilson	DATE	12/01
SUPERVISED BY	PETRONE	DATE	12/01
CHECKED BY	WILSON, PETRONE	DATE	12/01

twilson
12/10/01
PROD=54
DGN=copies i
D:\LOCAL\FILL\SB0NO\2495J583846.83846cd2.1wwilson.prf

CONST NO. 19005-3153-44

PROJECT NO.	YEAR	SHEET NO.
IM-40-4(73)206	2002	

REVISIONS

NO.	DATE	BY	BRIEF DESCRIPTION
1	1-10-02	W.A.P.	ADDED RISER BLOCK PLAN VIEW, REV. SECTION "A-A" AND DIM. IN EL. VIEW

NOTE: RISER BLOCKS TO BE POURED MONOLITHICALLY WITH CAP BEAM.

NOTE: COLUMN STEEL TO EXTEND 2'-4" INTO CAP BEAM.

NOTE: ELEVATIONS GIVEN AT ℄ BENT AND ℄ GIRDER.

NOTE: RISER BLOCK BEARING SURFACE TO CONFORM TO BOTTOM OF BEAM GRADE.

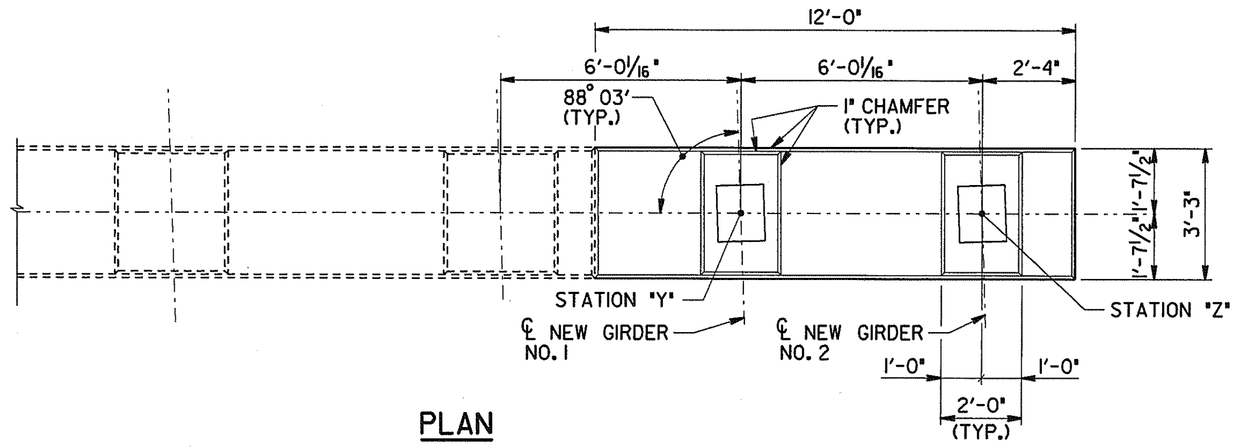

PLAN

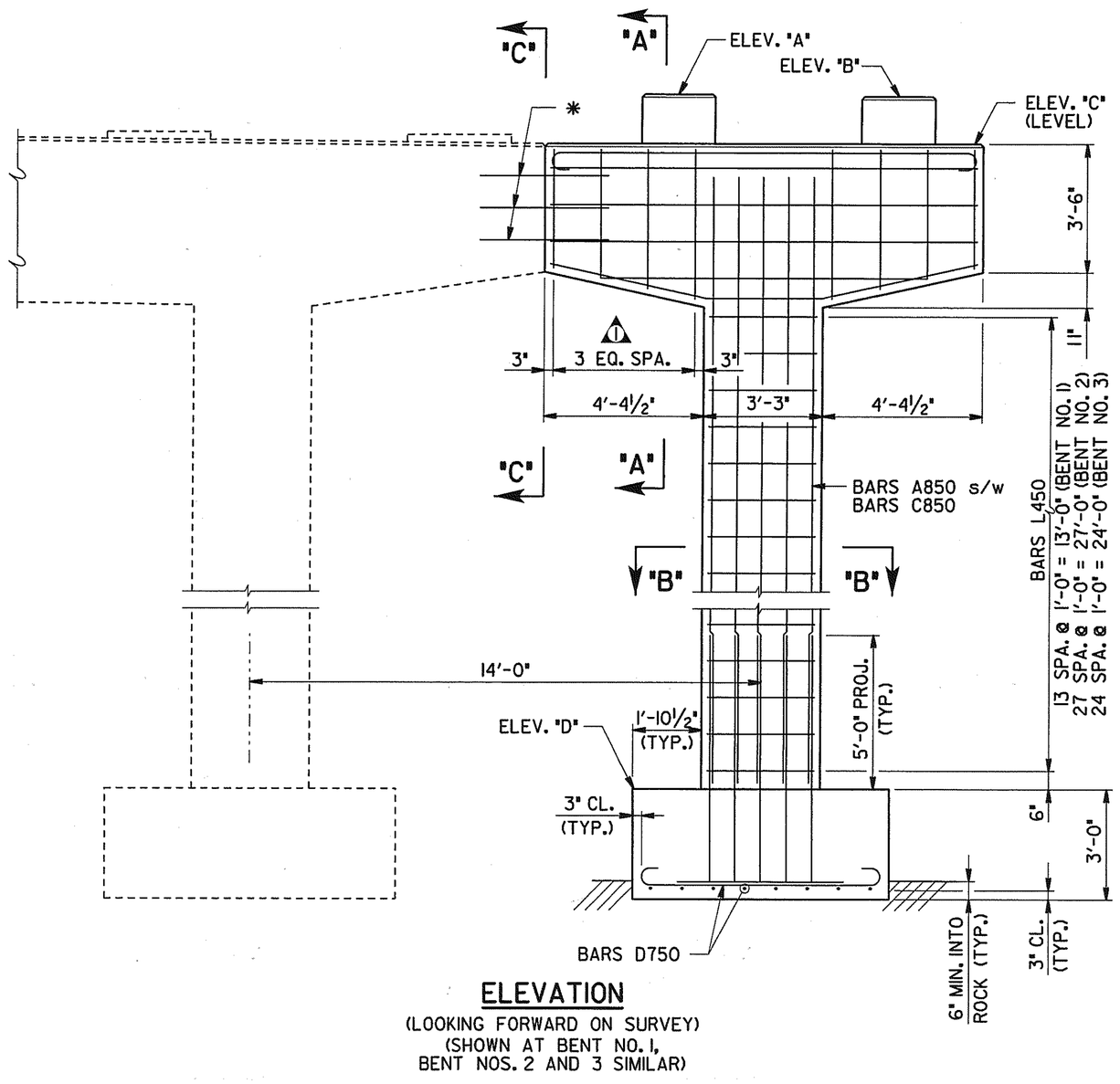

ELEVATION

(LOOKING FORWARD ON SURVEY)
(SHOWN AT BENT NO. 1, BENT NOS. 2 AND 3 SIMILAR)

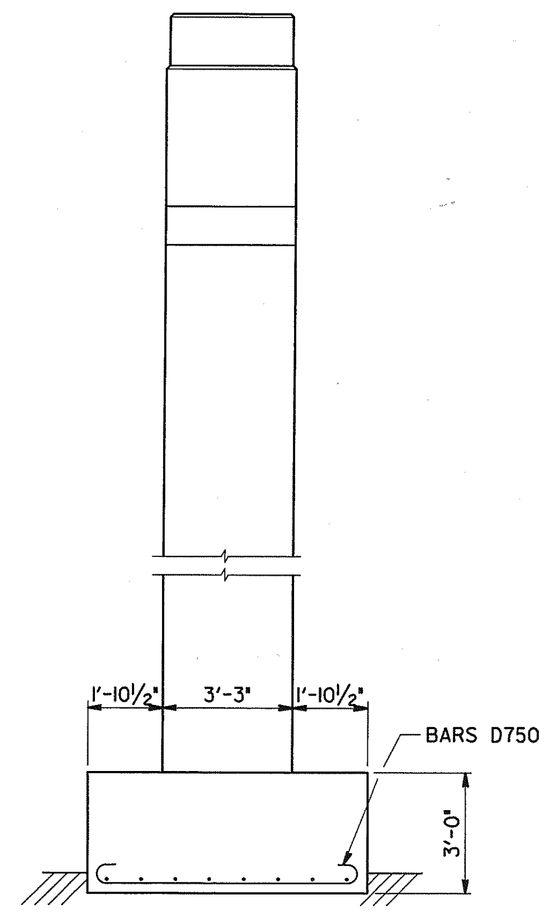

END ELEVATION

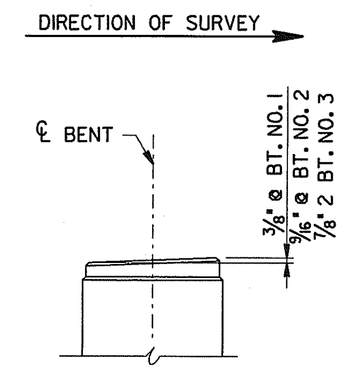

RISER BLOCK SLOPE DETAIL

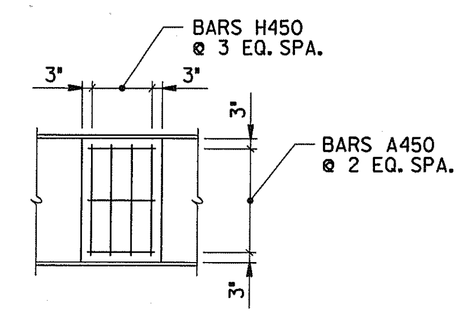

TYPICAL PLAN OF RISER BLOCK ⚠1

TABLE OF STATIONS AND ELEVATIONS

ITEM	STATION "Y"	STATION "Z"	"A"	"B"	"C"	"D"
BENT NO. 1	107+63.14	107+62.93	450.44	450.38	449.05	431.00
BENT NO. 2	108+45.81	108+45.60	451.54	451.47	450.35	418.00
BENT NO. 3	109+54.64	109+54.43	453.59	453.52	452.29	422.81

NOTE: STATIONS GIVEN AT ℄ BENT AND ℄ GIRDER.

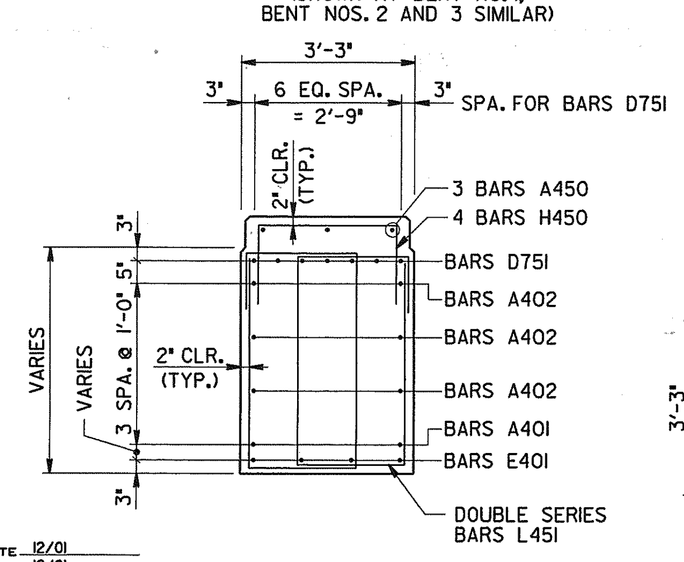

SECTION "A-A" ⚠1

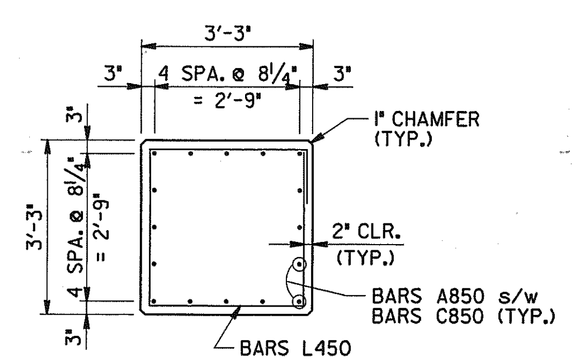

SECTION "B-B"

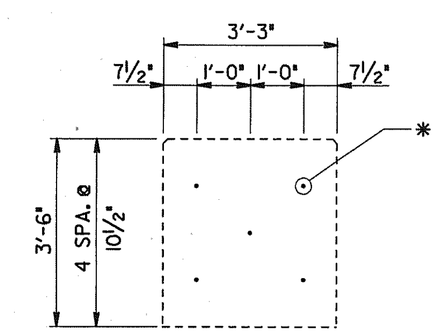

SECTION "C-C"

* INDICATES BARS DRILLED AND GROUTED INTO EXISTING CAP BEAM WITH 1'-9" EMBEDMENT. (BARS A750)

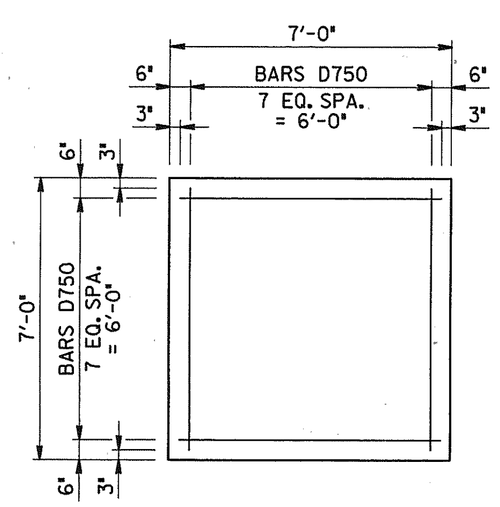

PLAN OF FOOTING

(SHOWING REINFORCEMENT)

ESTIMATED QUANTITIES

ITEM	CLASS "A" CONCRETE C.Y.	REINFORCING STEEL LBS.
BENT NO. 1	18	1,959
BENT NO. 2	23	3,443
BENT NO. 3	23	3,407

STATE OF TENNESSEE
DEPARTMENT OF TRANSPORTATION

BENT NOS. 1, 2 AND 3
WIDENING OF INTERSTATE 40
OVER
HERMAN STREET AND
NASHVILLE AND WESTERN RAILROAD
STATION 107+33.78 (LOG MI. 16.62)
BRIDGE ID. NO. 19I00400061
DAVIDSON COUNTY
2002

M-427-41

DESIGNED BY L. MILLER DATE 12/01
DRAWN BY t. wilson DATE 12/01
SUPERVISED BY PETRONE DATE 12/01
CHECKED BY WILSON, PETRONE DATE 12/01

TWilson
1/15/02
1:50:32
PDF: 1 copies
D:\LOCAL\FULL\B080\V7163.J583846.J583846P1.TWilson.prf

CONST NO. 19005-3153-44

PROJECT NO.	YEAR	SHEET NO.
IM-40-4(73)206	2002	

REVISIONS

NO.	DATE	BY	BRIEF DESCRIPTION

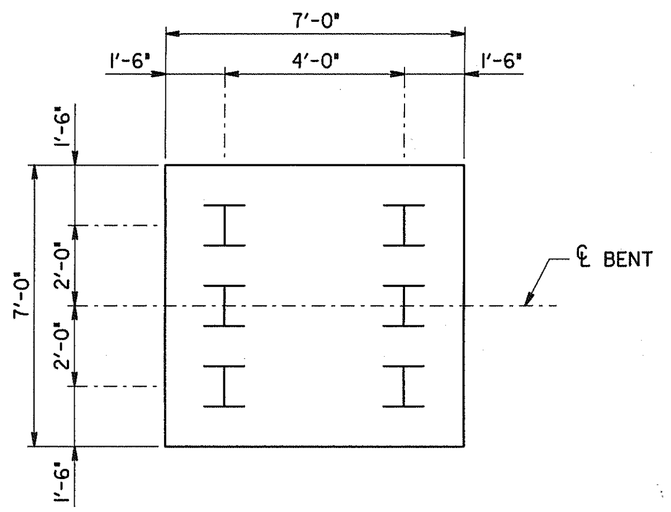

PLAN OF FOOTING AT BENT NO. 3

(SHOWING PILE ARRANGEMENT)
(HP12x74 PILES)

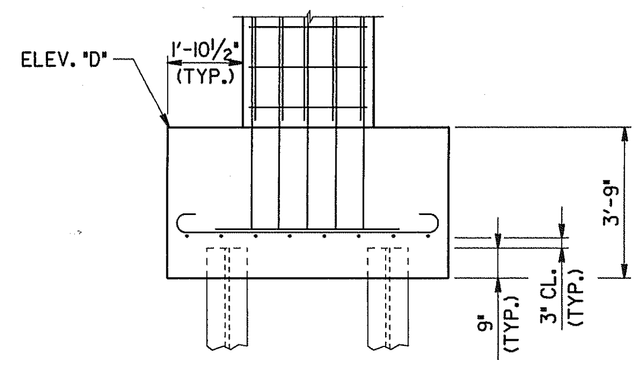

ELEVATION OF FOOTING AT BENT NO. 3

(SHOWING PILE ARRANGEMENT)

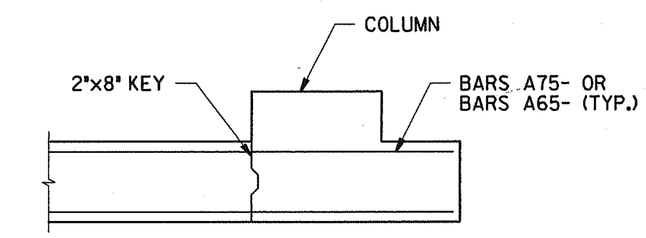

TYPICAL CRASHWALL KEY DETAIL

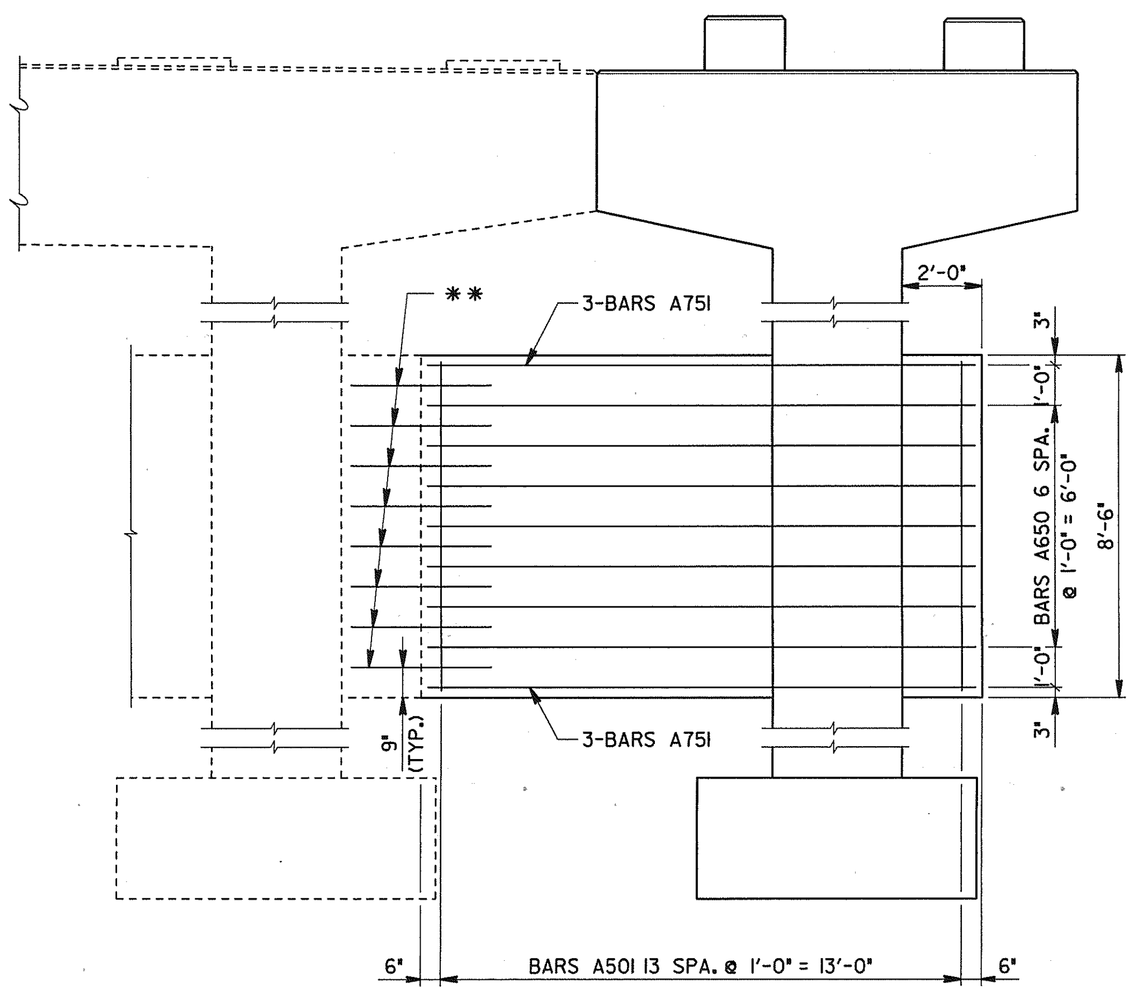

PARTIAL ELEVATION SHOWING CRASHWALL

(LOOKING FORWARD ON SURVEY - BENT NO. 2)

** INDICATES BARS DRILLED AND GROUTED INTO CENTER OF EXISTING CRASHWALL @ 1'-0" WITH 1'-9" EMBEDMENT. (BARS A750)

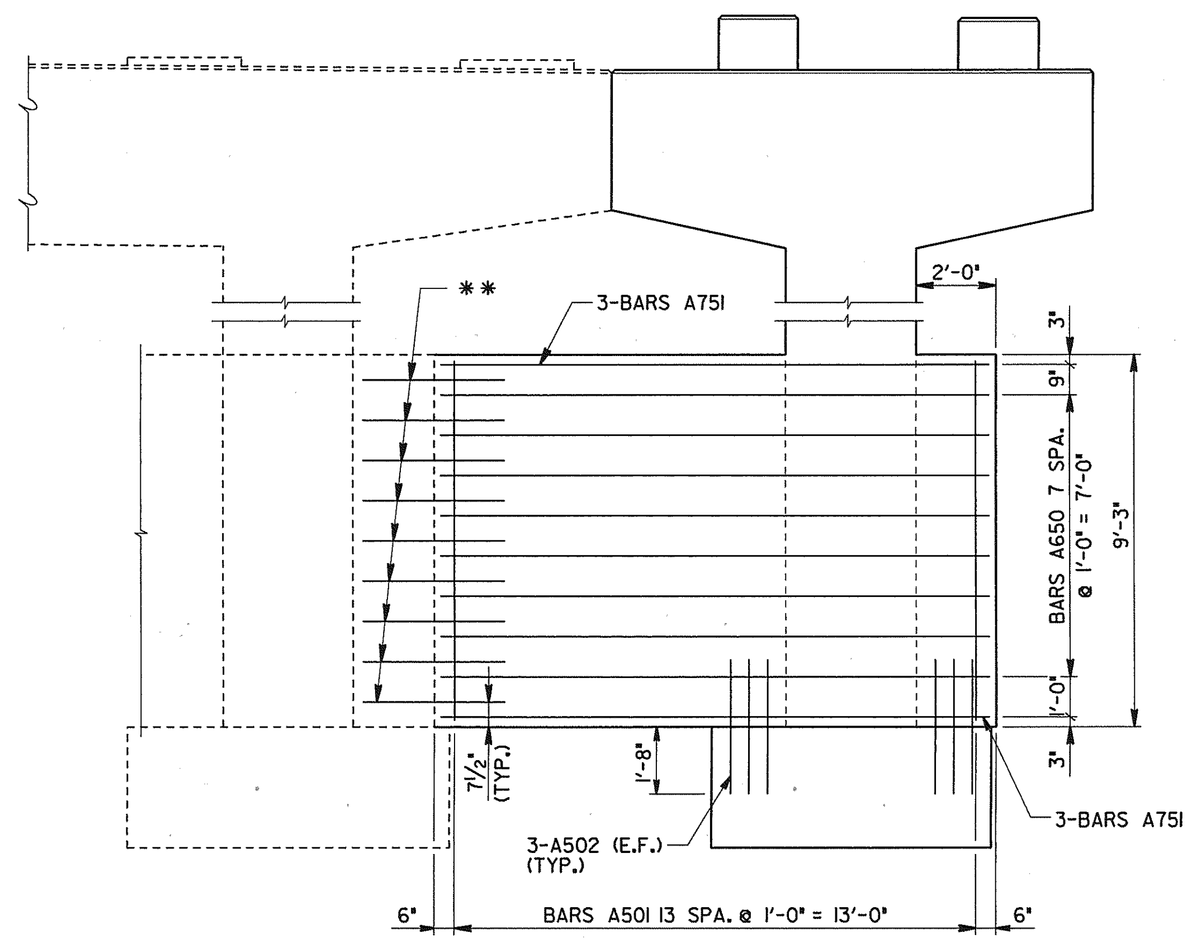

PARTIAL ELEVATION SHOWING CRASHWALL

(LOOKING FORWARD ON SURVEY - BENT NO. 3)

** INDICATES BARS DRILLED AND GROUTED INTO CENTER OF EXISTING CRASHWALL @ 1'-0" WITH 1'-9" EMBEDMENT. (BARS A750)

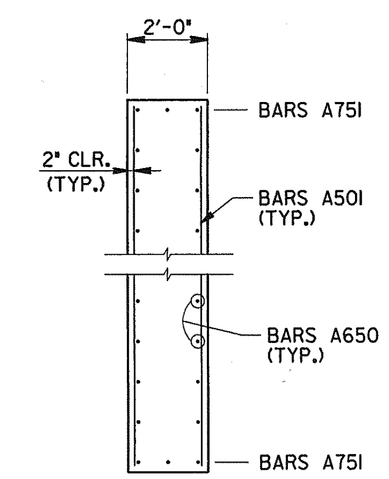

TYPICAL CRASHWALL SECTION

STATE OF TENNESSEE
DEPARTMENT OF TRANSPORTATION

BENT DETAILS
WIDENING OF INTERSTATE 40
OVER
HERMAN STREET AND
NASHVILLE AND WESTERN RAILROAD
STATION 107+33.78 (LOG MI. 16.62)
BRIDGE ID. NO. 19I0040006I
DAVIDSON COUNTY
2002

LARRY W. MILLER REGISTERED ENGINEER No. 022281 STATE OF TENNESSEE 12/10/01

M-427-42

DESIGNED BY L. MILLER DATE 12/01
DRAWN BY t. wilson DATE 12/01
SUPERVISED BY PETRONE DATE 12/01
CHECKED BY WILSON, PETRONE DATE 12/01

twilson
12/10/01
12:00:53
pm
D:\LOCAL\FULL\$GHNOV2495.083846.83846bt4.twilson.prf

CONST NO. 19005-3153-44

PROJECT NO.	YEAR	SHEET NO.
IM-40-4(73)206	2002	

REVISIONS

NO.	DATE	BY	BRIEF DESCRIPTION

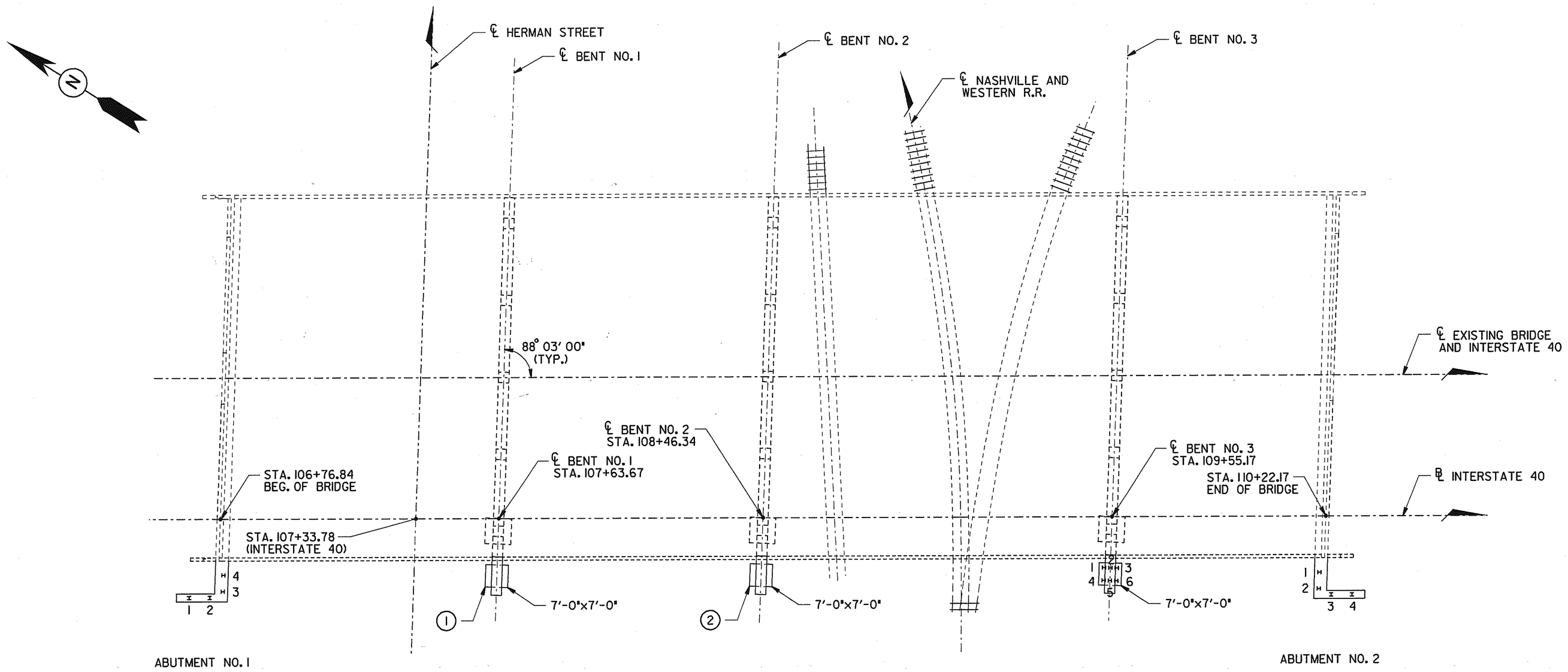

PLAN

TABLE SHOWING PILE NOS., P.C.O. ELEV. AND PILE LENGTHS

		PILE NUMBER					
		1	2	3	4	5	6
ABUTMENT NO. 1	P.C.O. ELEVATION						
	PILE TIP ELEVATION						
	IN PLACE PILE LENGTH						
ABUTMENT NO. 2	P.C.O. ELEVATION						
	PILE TIP ELEVATION						
	IN PLACE PILE LENGTH						
BENT NO. 3	P.C.O. ELEVATION						
	PILE TIP ELEVATION						
	IN PLACE PILE LENGTH						

TABLE SHOWING FOOTING ELEVATIONS

	1	2	3
FINAL TOP OF FOOTING ELEV.			
FINAL BOTTOM OF FOOTING ELEV.			

LARRY W. MILLER REGISTERED ENGINEER No. 022229 STATE OF TENNESSEE 12/20/01

STATE OF TENNESSEE
DEPARTMENT OF TRANSPORTATION

FINAL FOUNDATION DATA
WIDENING OF INTERSTATE 40
OVER
HERMAN STREET AND
NASHVILLE AND WESTERN RAILROAD
STATION 107+33.78 (LOG MI. 16.62)
BRIDGE ID. NO. 19I0040006I
DAVIDSON COUNTY
2002

M-427-43

DESIGNED BY L. MILLER DATE 12/01
DRAWN BY t.wilson DATE 12/01
SUPERVISED BY PETRONE DATE 12/01
CHECKED BY WILSON, PETRONE DATE 12/01

twilson
12/20/01
8:20:25
DN:LOC:LEVEL1,3GND0\2495\J583846\838465ffd.twilson.prf

BILL OF STEEL

CONST NO. 19005-3153-44

PROJECT NO.	YEAR	SHEET NO.
IM-40-4(73)206	2002	

REVISIONS

NO.	DATE	BY	BRIEF DESCRIPTION

SUPERSTRUCTURE

BAR	LOCATION	SIZE	NO. REQ'D	BENDING DIMENSIONS A	B	C	D	LENGTH
		EPOXY						
A500E	SLAB	5	372	30'-0"				30'-0"
A501E	SLAB	5	31	6'-8"				6'-8"
A502E	SLAB	5	1030	15'-1"				15'-1"
A600E	SLAB	6	22	54'-1"				54'-1"
A601E	SLAB	6	22	57'-7"				57'-7"
A602E	SLAB	6	22	59'-4"				59'-4"
B471E	SLAB	4	688	2'-2"				2'-8"

BENT NO. 1

BAR	LOCATION	SIZE	NO. REQ'D	BENDING DIMENSIONS A	B	C	D	LENGTH
A401	CAP	4	2	8'-11"				8'-11"
A402	CAP	4	6	11'-8"				11'-8"
A450	RISER BLOCK	4	6	1'-8"				1'-8"
A750	CAP	7	5	3'-6"				3'-6"
A850	COLUMN	8	16	16'-1"				16'-1"
C850	COLUMN	8	16	7'-9"				9'-1"
D750	FOOTING	7	16	6'-6"				8'-2"
D751	CAP	7	7	11'-8"				13'-4"
E401	CAP	4	4	3'-2 1/4"	4'-4"	11"	4'-3"	11'-10"
H450	RISER BLOCK	4	8	2'-9"	1'-9"			6'-3"
L450	COLUMN	4	14	2'-11"	1'-8"	2'-11"		13'-4"
SERIES L451	CAP	4	4	1'-11"	1'-8"			50'-7"
				DIMENSION "C" VARIES FROM 3'-2" TO 3'-11 3/4" IN INCR. OF 3 1/4" (4 BARS)				

BENT NO. 2

BAR	LOCATION	SIZE	NO. REQ'D	BENDING DIMENSIONS A	B	C	D	LENGTH
A401	CAP	4	2	8'-11"				8'-11"
A402	CAP	4	6	11'-8"				11'-8"
A450	RISER BLOCK	4	6	1'-8"				1'-8"
A501	CRASH WALL	5	28	8'-2"				8'-2"
A650	CRASH WALL	6	14	13'-8"				13'-8"
A750	CAP & CRASH WALL	7	13	3'-6"				3'-6"
A751	CRASH WALL	7	6	13'-8"				13'-8"
A850	COLUMN	8	16	30'-4"				30'-4"
C850	COLUMN	8	16	7'-9"				9'-1"
D750	FOOTING	7	16	6'-6"				8'-2"
D751	CAP	7	7	11'-8"				13'-4"
E401	CAP	4	4	3'-2 1/4"	4'-4"	11"	4'-3"	11'-10"
H450	RISER BLOCK	4	8	2'-9"	1'-9"			6'-3"
L450	COLUMN	4	28	2'-11"	1'-8"	2'-11"		13'-4"
SERIES L451	CAP	4	4	1'-11"	1'-8"			50'-7"
				DIMENSION "C" VARIES FROM 3'-2" TO 3'-11 3/4" IN INCR. OF 3 1/4" (4 BARS)				

REINFORCING STEEL CODE

Type	Size	Series

NOTE: Dimensions shown on this sheet are outside to outside of Bar. Standard C.R.S.I. hook details shall apply.

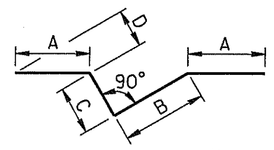

BARS JX

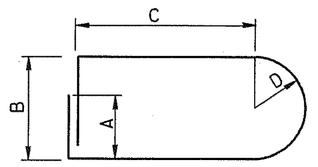

BARS X

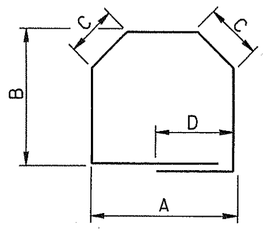

BARS M

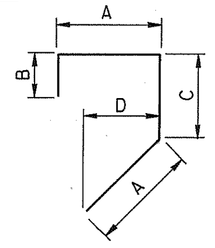

BARS J

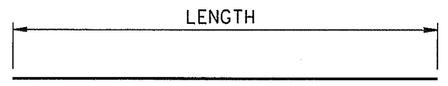

BARS A

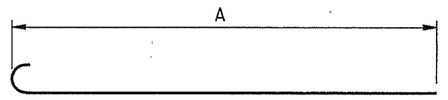

BARS B

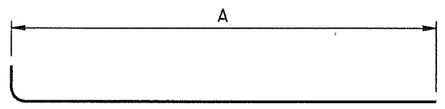

BARS C

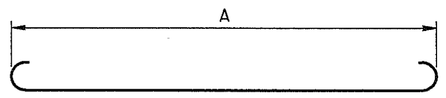

BARS D

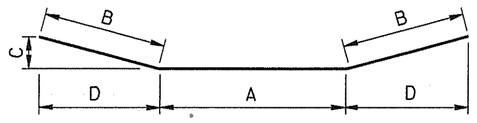

BARS E

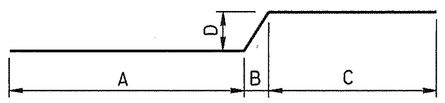

BARS F

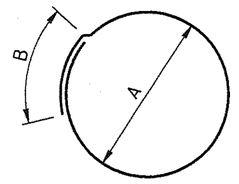

BARS T

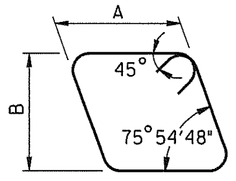

BARS LS

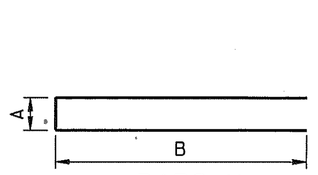

BARS H

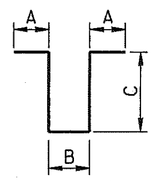

BARS K

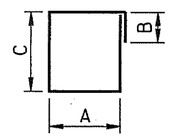

BARS L

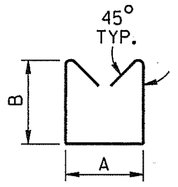

BARS S

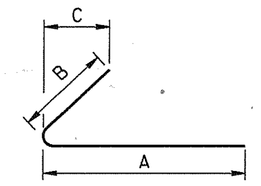

BARS CB

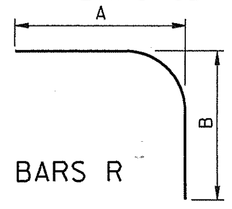

BARS R

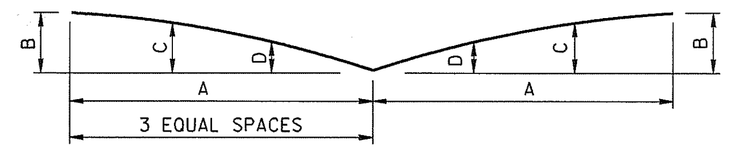

BARS V

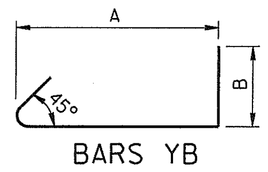

BARS YB

BARS YA

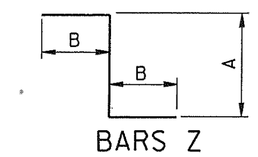

BARS Z

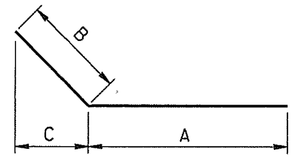

BARS CD

STATE OF TENNESSEE
DEPARTMENT OF TRANSPORTATION

BILL OF STEEL
WIDENING OF INTERSTATE 40
OVER
HERMAN STREET AND
NASHVILLE AND WESTERN RAILROAD
STATION 107+33.78 (LOG MI. 16.62)
BRIDGE ID. NO. 19100400061
DAVIDSON COUNTY
2002

LARRY W. MILLER
REGISTERED ENGINEER
No. 022284
STATE OF TENNESSEE
12/10/01

DESIGNED BY L. MILLER DATE 12/01
DRAWN BY t. wilson DATE 12/01
SUPERVISED BY PETRONE DATE 12/01
CHECKED BY WILSON, PETRONE DATE 12/01

twilson
12/10/01
1:20:03
pw:\\LOCALVFILL\BDWX2495\.5539/46.03846bd_twilson.prf

M-427-44

BILL OF STEEL

BENT NO. 3

BAR	LOCATION	SIZE	NO. REQ'D	BENDING DIMENSIONS A	B	C	D	LENGTH
A401	CAP	4	2	8'-11"				8'-11"
A402	CAP	4	6	11'-8"				11'-8"
A450	RISER BLOCK	4	6	1'-8"				1'-8"
A501	CRASH WALL	5	28	8'-11"				8'-11"
A502	CRASH WALL	5	12	3'-4"				3'-4"
A650	CRASH WALL	6	16	13'-8"				13'-8"
A750	CAP & CRASH WALL	7	14	3'-6"				3'-6"
A751	CRASH WALL	7	6	13'-8"				13'-8"
A850	COLUMN	8	16	27'-6"				27'-6"
C850	COLUMN	8	16	7'-9"				9'-1"
D750	FOOTING	7	16	6'-6"				8'-2"
D751	CAP	7	7	11'-8"				13'-4"
E401	CAP	4	4	3'-2 1/4"	4'-4"	11"	4'-3"	11'-10"
H450	CAP	4	8	2'-9"	1'-9"			6'-3"
L450	COLUMN	4	25	2'-11"	1'-8"	2'-11"		13'-4"
SERIES	CAP	4	4	1'-11	1'-8"			50'-7"
L451				DIMENSION "C" VARIES FROM 3'-2" TO 3'-11 3/4" IN INCR. OF 3 1/4" (4 BARS)				

ABUTMENT NO. 1

BAR	LOCATION	SIZE	NO. REQ'D	BENDING DIMENSIONS A	B	C	D	LENGTH
			EPOXY					
A470E	WINGWALL	4	8	3'-6"				3'-6"
A640E	ENDWALL	6	26	4'-9"				4'-9"
A641E	ENDWALL	6	2	13'-2"				13'-2"
B470E	WINGWALL	4	24	2'-2"				2'-8"
F640E	RDWY. BRACKET	6	13	1'-0"	1'-3"	1'-0"	1'-3"	3'-9"
			REGULAR					
A440	RDWY. BRACKET	4	1	11'-9"				11'-9"
A441	WINGWALL	4	15	5'-2"				5'-2"
A442	WINGWALL	4	5	16'-0"				16'-0"
A443	WINGWALL	4	1	14'-5"				14'-5"
A444	RISER BLOCK	4	8	1'-3"				1'-3"
A445	WINGWALL	4	1	14'-0"				14'-0"
A540	ENDWALL	5	5	2'-0"				2'-0"
A541	ABUT. BEAM	5	2	11'-7"				11'-7"
A542	WING FTG.	5	2	16'-2"				16'-2"
A640	WINGWALL	6	15	5'-2"				5'-2"
A641	ABUT. BEAM	6	5	3'-6"				3'-6"
A642	ABUT. BEAM	6	10	11'-7"				11'-7"
A643	ABUT. BEAM	6	6	4'-0"				4'-0"
A644	WINGWALL	6	5	16'-0"				16'-0"
A645	WINGWALL	6	4	4'-4"				4'-4"
A646	WING FTG.	6	4	4'-0"				4'-0"
A647	WINGWALL	6	1	14'-0"				14'-0"
A740	WING FTG.	7	9	16'-2"				16'-2"
C640	ENDWALL	6	10	13'-2"				14'-2"
H440	RISER BLOCK	4	6	1'-7"	1'-9"			5'-1"
H540	RDWY. BRACKET	5	13	1'-8"	6"			2'-8"
H640	ABUT. BEAM	6	10	8"	4'-0"			8'-8"
H641	WING FTG.	6	15	8"	4'-0"			8'-8"
J540	WINGWALL	5	15	1'-5"	10"	9"	1'-0"	4'-5"
L540	ABUT. BEAM	5	9	2'-8"	1'-8"	2'-2"		11'-4"
L541	WING FTG.	5	13	2'-2"	1'-8"	2'-2"		10'-4"

ABUTMENT NO. 2

BAR	LOCATION	SIZE	NO. REQ'D	BENDING DIMENSIONS A	B	C	D	LENGTH
			EPOXY					
A470E	WINGWALL	4	8	3'-6"				3'-6"
A640E	ENDWALL	6	26	4'-9"				4'-9"
A641E	ENDWALL	6	2	13'-2"				13'-2"
B470E	WINGWALL	4	24	2'-2"				2'-8"
F640E	RDWY. BRACKET	6	13	1'	1'-3"	1'	1'-3"	3'-9"
			REGULAR					
A440	RDWY. BRACKET	4	1	11'-9"				11'-9"
A441	WINGWALL	4	15	5'-2"				5'-2"
A442	WINGWALL	4	5	16'-0"				16'-0"
A443	WINGWALL	4	1	14'-5"				14'-5"
A444	RISER BLOCK	4	8	1'-3"				1'-3"
A445	WINGWALL	4	1	14'-0"				14'-0"
A540	ENDWALL	5	5	2'-0"				2'-0"
A541	ABUT. BEAM	5	2	11'-7"				11'-7"
A542	WING FTG.	5	2	16'-2"				16'-2"
A640	WINGWALL	6	15	5'-2"				5'-2"
A641	ABUT. BEAM	6	5	3'-6"				3'-6"
A642	ABUT. BEAM	6	10	11'-7"				11'-7"
A643	ABUT. BEAM	6	6	4'-0"				4'-0"
A644	WINGWALL	6	5	16'-0"				16'-0"
A645	WINGWALL	6	4	4'-4"				4'-4"
A646	WING FTG.	6	4	4'-0"				4'-0"
A647	WINGWALL	6	1	14'-0"				14'-0"
A740	WING FTG.	7	9	16'-2"				16'-2"
C640	ENDWALL	6	10	13'-2"				14'-2"
H440	RISER BLOCK	4	6	1'-7"	1'-9"			5'-1"
H540	RDWY. BRACKET	5	13	1'-8"	6"			2'-8"
H640	ABUT. BEAM	6	13	8"	4'-10"			8'-8"
H641	WING FTG.	6	14	8"	4'-10"			8'-8"
J540	WINGWALL	5	15	1'-5"	10"	9"	1'-0"	4'-5"
L540	ABUT. BEAM	5	9	2'-8"	1'-8"	2'-2"		11'-4"
L541	WING FTG.	5	13	2'-2"	1'-8"	2'-2"		10'-4"

CONST NO. 19005-3153-44

PROJECT NO.	YEAR	SHEET NO.
IM-40-4(73)206	2002	

REVISIONS

NO.	DATE	BY	BRIEF DESCRIPTION

REINFORCING STEEL CODE

Type	Size	Series

NOTE: Dimensions shown on this sheet are outside to outside of Bar. Standard C.R.S.I. hook details shall apply.

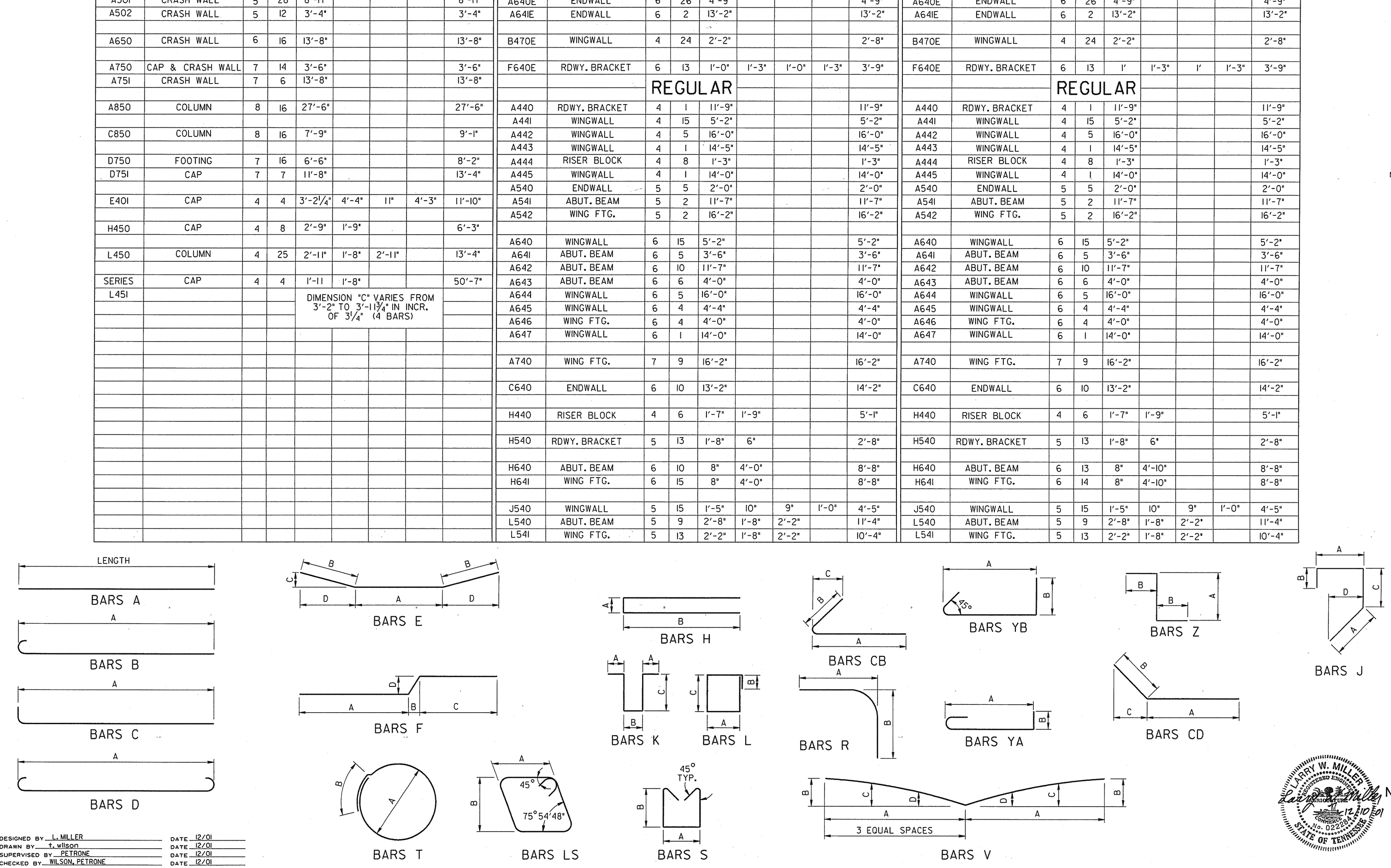

STATE OF TENNESSEE
DEPARTMENT OF TRANSPORTATION

BILL OF STEEL
WIDENING OF INTERSTATE 40
OVER
HERMAN STREET AND
NASHVILLE AND WESTERN RAILROAD
STATION 107+33.78 (LOG MI. 16.62)
BRIDGE ID. NO. 19I00400061
DAVIDSON COUNTY
2002

M-427-45

DESIGNED BY L. MILLER DATE 12/01
DRAWN BY t. wilson DATE 12/01
SUPERVISED BY PETRONE DATE 12/01
CHECKED BY WILSON, PETRONE DATE 12/01

twilson
12/10/01
12:00:12
D:\LOCAL\FILL\GINDY2491.I583846.s3946bs2.twilson.prf

CONST NO. 19005-3153-44

PROJECT NO.	YEAR	SHEET NO.
IM-40-4(73)206	2002	

REVISIONS

NO.	DATE	BY	BRIEF DESCRIPTION
1	1-10-02	W.A.P.	LIST OF DWG'S. AND LIST OF STD. DWG'S
2	1-21-02	W.A.P.	REV. LIST OF DWG'S.
3	2-06-02	W.A.P.	REV. LIST OF DWG'S.

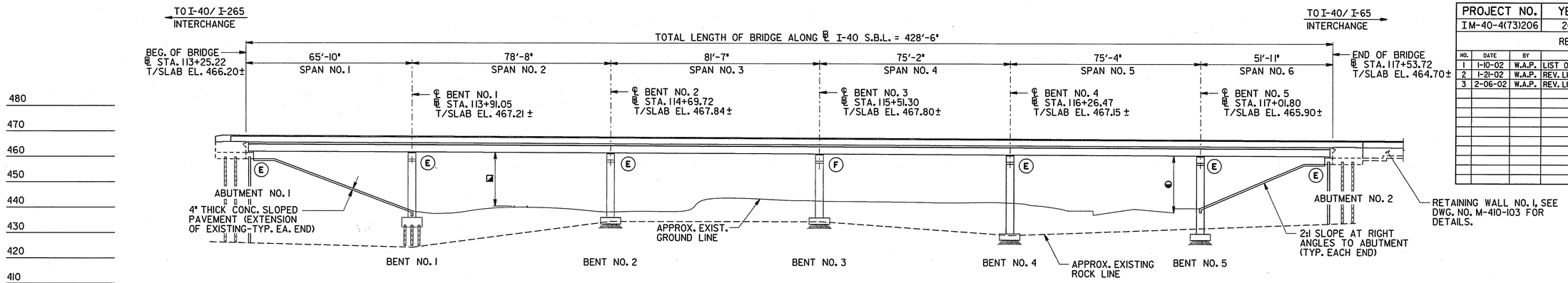

ELEVATION

(AT RIGHT ANGLES TO ℄ I-40 S.B.L.)
SCALE: 1" = 20'

NOTE: THE FILLS AT THE ENDS OF THE BRIDGE SHALL BE IN PLACE AND THOROUGHLY COMPACTED BEFORE ANY ABUTMENT PILES ARE DRIVEN.

◯ DENOTES: EXISTING AND PROPOSED SUPPORT CONDITION

E DENOTES: EXPANSION

F DENOTES: FIXED

◪ DENOTES: EXISTING MINIMUM VERT. CLEARANCE = 23'-2 7/8"
PROPOSED MINIMUM VERT. CLEARANCE = 23'-1 3/4"

◒ DENOTES: EXISTING VERT. CLEARANCE = 22'-11"
PROPOSED VERT. CLEARANCE = 22'-5 11/16"
(BOTH SHOWN TO BOTTOM OF CURB ON CLINTON STREET)

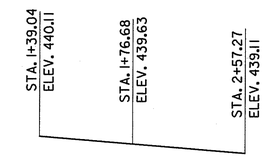

GRAPHICAL GRADE

(℄ CLINTON STREET)

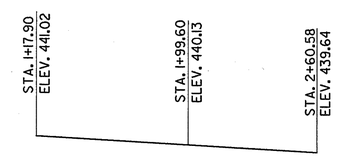

GRAPHICAL GRADE

(CSX RAILROAD)

LIST OF DRAWINGS ① ② ③

DWG. NO.	LAST REV. DATE	DRAWING
M-427-46	2-06-02	ELEVATION OF BRIDGE NO. 2
M-427-47	1-21-02	PLAN OF BRIDGE NO. 2
M-427-48		GENERAL NOTES
M-427-49	2-06-02	ESTIMATED QUANTITIES
M-427-50		FOUNDATION DATA
M-427-51		SUPERSTRUCTURE
M-427-52		SUPERSTRUCTURE DETAILS
M-427-53		FRAMING PLAN
M-427-54		STRUCTURAL STEEL DETAILS
M-427-55		STRUCTURAL STEEL DETAILS
M-427-56		BRIDGE SCREED
M-427-57	1-10-02	ABUTMENT NO. 1
M-427-58		ABUTMENT NO. 1 DETAILS
M-427-59	1-10-02	ABUTMENT NO. 2
M-427-60		ABUTMENT NO. 2 DETAILS
M-427-61	1-10-02	BENT NOS. 1, 2, 4, AND 5
M-427-62	1-10-02	BENT NO. 3
M-427-63		FINAL FOUNDATION DATA
M-427-64		BILL OF STEEL
M-427-65		BILL OF STEEL
M-427-66		BILL OF STEEL

* REFERENCE DRAWINGS

DWG. NOS. K-80-16 THRU K-80-26 AND BR-46-94, 95, 100 THRU 103.

* DENOTES: THESE DRAWINGS ARE TO BE PRINTED WITH PLANS.

LIST OF STANDARD DRAWINGS ①

DWG. NO.	LAST REV. DATE	DRAWING
STD-1-1	7-31-00	BRIDGE RAILING CONCRETE PARAPET
STD-1-2	1-05-01	STEEL SLIDER PLATE ASSEMBLIES FOR CONCRETE PARAPET AND BRIDGE DECK DRAIN DETAILS
STD-1-5	7-31-00	REINFORCED CONCRETE PAVEMENT AT BRIDGE ENDS
STD-1-6	4-28-97	BRIDGE END DRAIN DETAILS 2'x8'-7" AND 4'x8'-7" WITH PAVEMENT AT BRIDGE ENDS
STD-1-7	7-31-00	BRIDGE END DRAIN DETAILS 2'x8'-7" AND 4'x8'-7" WITH PAVEMENT AT BRIDGE ENDS
STD-1-9	5-01-95	BRIDGE END DRAIN DETAILS 4'x8'-7" WITH PAVEMENT AT BRIDGE ENDS
STD-3-1	2-14-94	STRIP SEAL EXPANSION JOINT NEW CONSTRUCTION
STD-3-2	2-14-94	STRIP SEAL EXPANSION JOINT NEW CONSTRUCTION
STD-4-1	5-21-99	STANDARD PRECAST PRESTRESSED BRIDGE DECK PANELS GENERAL DETAILS
STD-4-2	6-10-96	STANDARD PRECAST PRESTRESSED BRIDGE DECK PANELS DESIGN CRITERIA
STD-4-3	6-10-96	STANDARD PRECAST PRESTRESSED BRIDGE DECK PANELS GENERAL DETAILS
STD-4-4	6-10-96	STANDARD PRECAST PRESTRESSED BRIDGE DECK PANELS CONSTRUCTION DETAILS
STD-5-1	10-25-93	STANDARD PILE DETAILS
STD-5-2	5-21-99	STANDARD PILE DETAILS
STD-8-2	9-01-91	LIGHT STANDARD-SUPPORT DETAILS
STD-9-1	12-19-94	REINFORCING BAR SUPPORT DETAILS FOR CONCRETE SLABS
STD-10-1	5-11-92	MISCELLANEOUS ABUTMENT AND DRAINAGE DETAILS
RD-SA-1	5-27-98	SAFETY APPROACH TO UNDERPASSES GRADING DESIGN AND SLOPE PROTECTION

LIST OF SPECIAL PROVISIONS

NO.	LAST REV. DATE	REGARDING
105A	12-15-97	APPROVAL OF SHOP DRAWINGS
602	3-18-96	STEEL STRUCTURES
604CR	2-19-96	REPAIR OF BRIDGE DECK CRACKS
604S	5-01-00	STRIP SEAL EXPANSION DEVICE

* DENOTES: THESE DRAWINGS ARE TO BE PRINTED WITH PLANS.

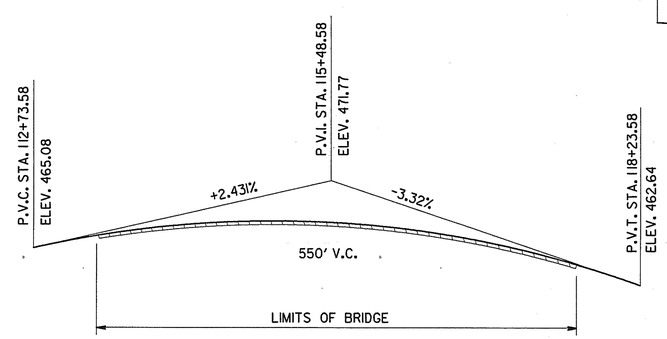

PROPOSED GRADE AT TOP OF SLAB

(FOR BRIDGE CONSTRUCTION ONLY)

NOTE: TOP OF SLAB TO BE 3 1/4"± BELOW FINAL ASPHALT GRADES AS SHOWN ON ROADWAY PLANS.

ESTIMATED ADT (2022) = 50,200

DESIGN SPEED = 55 M.P.H.

84'-0" ROADWAY WITH TYPE STD-1-1 (MODIFIED) CONCRETE PARAPET

STATE OF TENNESSEE
DEPARTMENT OF TRANSPORTATION

ELEVATION OF BRIDGE NO. 2
WIDENING OF INTERSTATE 40
OVER
CSX RAILROAD AND CLINTON STREET
STATION 116+75.34 (LOG MI. 16.75)
BRIDGE ID. NO. 19100400063 (RT. LN.)
DAVIDSON COUNTY
2002

M-427-46

DESIGNED BY R. POTIER DATE 12/01
DRAWN BY C. CANNON DATE 12/01
SUPERVISED BY PETRONE DATE 12/01
CHECKED BY WILSON, PETRONE DATE 12/01

TWilson
2/6/02
12:53:52
PM
cwp1es1
O:\LOCAL\FULL\3DNDX29099.153348.B3848ela.TWilson.prf

PORTABLE BARRIER RAIL 429 FEET

CONST NO. 19005-3153-44

PROJECT NO.	YEAR	SHEET NO.
IM-40-4(73)206	2002	

REVISIONS

NO.	DATE	BY	BRIEF DESCRIPTION
1	1-10-02	W.A.P.	P.A.B.E. NOTE AND CURVE DATA
2	1-21-02	W.A.P.	ADDED SECTION "A-A"

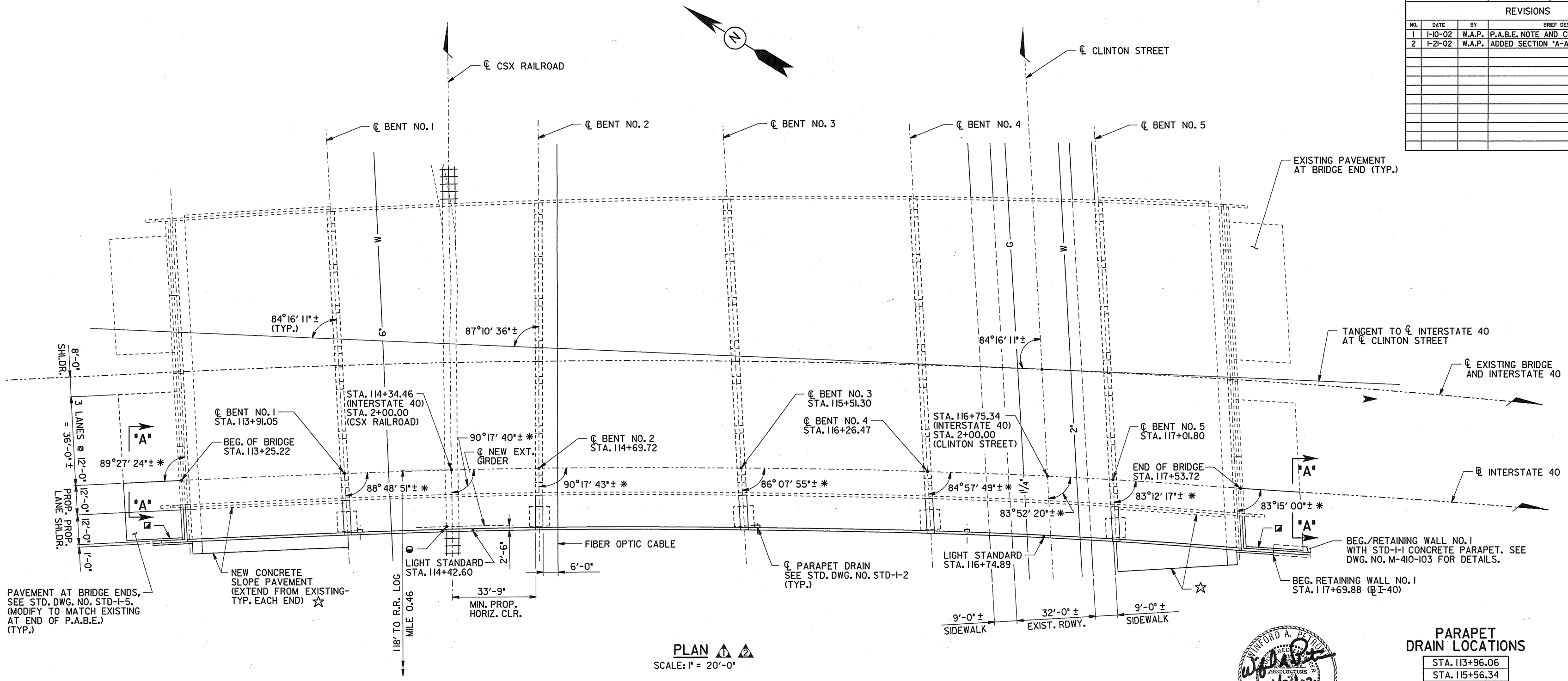

PLAN 1 2

SCALE: 1" = 20'-0"

DENOTES: 4'-0"x8'-7" BRIDGE END DRAIN. SEE STD. DWG NOS. STD-1-6, STD-1-7, STD-1-9.

DENOTES: POINT OF MINIMUM VERTICAL CLEARANCE - CSX RAILROAD.
EXISTING = 23'-2 7/8"
PROPOSED = 23'-1 3/4"

* DENOTES: SKEW ANGLES TO LOCAL TANGENT TO BASELINE INTERSTATE 40 (TYP.).

☆ DENOTES: 4" THICK CONCRETE SLOPE PAVEMENT. SEE GENERAL NOTES ON M-427-48 FOR CONSTRUCTION REQUIREMENTS AND LIMITS.

NOTE: SEE STD. DWG. NO. STD-8-2, FOR LIGHT STANDARD SUPPORT DETAILS.

WINFORD A. PETRONE REGISTERED AGRICULTURAL ENGINEER NO. 13,774 STATE OF TENNESSEE

PARAPET DRAIN LOCATIONS

STA. 113+96.06
STA. 115+56.34
STA. 116+41.47

NOTE: COST OF THREE (3) PARAPET DRAINS TO BE INCLUDED IN THE UNIT PRICE BID FOR CONCRETE PARAPET.

CURVE DATA BASE LINE INTERSTATE 40 1

P.I. STA. 115+02.14
N = 667,927.7400
E = 1,734,047.2090
Δ = 9°19' 20" (RT.)
D = 1°31' 03"
R = 3,775.71
L = 614.31
T = 307.84

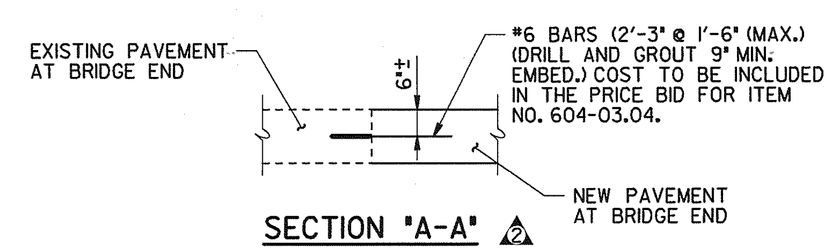

SECTION "A-A" 2

STATE OF TENNESSEE
DEPARTMENT OF TRANSPORTATION

PLAN OF BRIDGE NO. 2 WIDENING OF INTERSTATE 40 OVER CSX RAILROAD AND CLINTON STREET

STATION 116+75.34 (LOG MI. 16.75)
BRIDGE ID. NO. 19I00400063 (RT. LN.)
DAVIDSON COUNTY
2002

DESIGNED BY	R. POTIER	DATE	12/01
DRAWN BY	C. CANNON	DATE	12/01
SUPERVISED BY	PETRONE	DATE	12/01
CHECKED BY	WILSON, PETRONE	DATE	12/01

M-427-47

Twilson
12/20/01
10:07:15
S:\LOCAL\BILL\GOND\2162\IS8348.8348pln_TWilson.prf

GENERAL NOTES

SPECIFICATIONS: STANDARD ROAD AND BRIDGE SPECIFICATIONS OF THE TENNESSEE DEPARTMENT OF TRANSPORTATION (MARCH 1, 1995 EDITION).

LOADING: HS20-44 WITH ALTERNATE MILITARY.

DESIGN SPECIFICATIONS: AASHTO 1996 EDITION WITH ADDENDA INCLUDING THE STANDARD SPECIFICATIONS FOR SEISMIC DESIGN OF HIGHWAY BRIDGES. SEISMIC PERFORMANCE CATEGORY "A" WITH ACCELERATION COEFFICIENT 0.075.

CONCRETE: TO BE CLASS "A" (CAST IN PLACE). f'c=3,000 PSI. CLASS "D" CONCRETE FOR BRIDGE DECKS SHALL BE IN ACCORDANCE WITH SECTION 604 OF THE STANDARD SPECIFICATIONS.

BRIDGE RAIL SYSTEM: BUILD BRIDGE RAILINGS ACCORDING TO STANDARD DRAWING STD-1-1, EXCEPT AS MODIFIED IN DETAIL ON DWG. NO. M-427-51.

BRIDGE DECK SURFACE FINISH: TO BE IN ACCORDANCE WITH METHOD (A) IN ARTICLE 604.23 OF THE STANDARD SPECIFICATIONS.

SHOP DRAWINGS: SEE SPECIAL PROVISION NO. 105A.

REINFORCING STEEL: SHALL BE ASTM A615 GRADE 60 UNLESS NOTED OTHERWISE. SEE SECTION 604 AND 907 OF THE STANDARD SPECIFICATIONS.

SPECIAL NOTE: FOUNDATIONS FOR BENTS SHALL BE EXCAVATED TO THE BOTTOM OF FOOTING ELEVATIONS SHOWN; ROD SOUNDINGS SHALL THEN BE MADE AS DIRECTED BY THE ENGINEER. FROM THE RESULTS OBTAINED THE ENGINEER WILL DECIDE IF PILES WILL BE USED OR THE FOOTINGS CARRIED TO ROCK. COST OF ROD SOUNDINGS TO BE INCLUDED IN THE UNIT PRICE BID FOR OTHER ITEMS. NO REINFORCING STEEL FOR BENT COLUMNS SHALL BE ORDERED UNTIL FINAL ELEVATIONS HAVE BEEN DETERMINED.

FALSEWORK OVER TRAFFIC: SEE SECTION 604.06 OF THE STANDARD SPECIFICATIONS.

NOTE: ALL FILL SHALL BE IN PLACE PRIOR TO EXCAVATING FOR BENT FOOTINGS. AFTER CONSTRUCTING THE BENT, EXTREME CARE SHALL BE TAKEN NOT TO DAMAGE OR MISALIGN THE BENT.

BEARING DEVICES SHALL BE IN ACCORDANCE WITH THE DETAILS AND DIMENSIONS SHOWN ON DRAWING M-427-52.

SPECIAL NOTE FOR RAILROAD CROSSINGS: THE CONTRACTOR SHALL CONDUCT HIS WORK SO AS TO PROTECT THE RAILROAD TRACKS AND PROPERTIES FROM ANY DAMAGE. THE WORK SHALL BE DONE IN ACCORDANCE WITH REGULATIONS STIPULATED BY THE CSX RAILROAD SO AS TO MAINTAIN CLEARANCE AND NOT INTERRUPT TRAFFIC.

VALUE ENGINEERING ALTERNATE BRIDGE DESIGN CRITERIA: ALTERNATE BRIDGE DESIGN PROPOSALS MAY NOT DIMINISH THE FUNCTIONAL OR STRUCTURAL EQUIVALENCY OF THE BRIDGE AND MUST MEET OR EXCEED BOTH THE SERVICE LEVEL AND ULTIMATE CAPACITIES OF THE CONTRACT PLANS STRUCTURE. ADDITIONALLY, THE HORIZONTAL CLEARANCES MAY NOT BE REDUCED, NOR MAY THE VERTICAL CLEARANCES BE LESS THAN THE MINIMUM ACCEPTABLE FOR THE TYPE FACILITY CROSSED.

PILES: TO BE HP12x53 DRIVEN TO REFUSAL ON ROCK OR A MINIMUM BEARING OF 55 TONS FOR THE BENTS AND 50 TONS FOR THE ABUTMENTS.

SPECIAL NOTE - FOOTING FOR BENTS: AFTER EXCAVATION TO ROCK FOR FOOTING HAS BEEN COMPLETED, HOLES 6' DEEP SHALL BE DRILLED AT POINTS DESIGNATED BY THE ENGINEER. FROM THE RESULTS OBTAINED, THE ENGINEER SHALL DETERMINE THE FINAL FOOTING ELEVATIONS. NO REINFORCING STEEL FOR BENT COLUMNS SHALL BE ORDERED UNTIL FINAL FOOTING ELEVATIONS HAVE BEEN DETERMINED.

NOTE: THE CONTRACTOR SHALL SAW CUT 1 INCH DEEP INTO THE SLAB BEFORE REMOVING CONCRETE. ALL TRANSVERSE REINFORCING STEEL SHALL REMAIN IN PLACE AND BE SPLICED WITH THE NEW REINFORCING. THE CONTRACTOR SHALL NOT USE A HYDRAULIC RAM MOUNTED ON A BACKHOE (COMMOMLY CALLED A HOE RAM) OR OTHER SIMILAR HEAVY EQUIPMENT FOR CONCRETE REMOVAL. THE MAXIMUM ALLOWABLE HAMMER SIZE IS THE 60 POUND CLASS.

GROUTED BARS IN DRILLED HOLES: HORIZONTALLY DRILLED HOLES SHALL BE DRILLED 1/2" IN DIAMETER LARGER THAN THE BAR, CLEANED, PACKED WITH NON-SHRINK GROUT AND THE BAR ROTATED (NOT DRIVEN) TO ITS SEAT. VERTICALLY DRILLED HOLES SHALL BE DRILLED 1/4" IN DIAMETER LARGER THAN THE BAR, CLEANED, PACKED WITH EPOXY GROUT AND THE BAR SHALL BE DRIVEN TO ITS SEAT. ALL GROUTING MATERIAL SHALL BE APPROVED BY T.D.O.T. MATERIALS AND TESTS.

NOTE: PAVE SLOPES AND EXPOSED EARTH UNDER BRIDGES WITH 4" THICK CEMENT CONCRETE SLAB REINFORCED WITH NO. 4 GAGE WIRE FABRIC @ 6" CENTERS AND 58 LB. PER 100 S.F. THE WIRE FABRIC REINFORCEMENT SHALL BE PLACED AT ONE-HALF THE DEPTH OF THE SLAB AND EXTEND TO WITHIN 3" OF ITS EDGE WITH A 12" LAP REQUIRED ON ALL SHEETS. THE COST OF THE WIRE FABRIC REINFORCEMENT TO BE INCLUDED IN THE UNIT PRICE BID FOR ITEM 709-04, REINFORCED CONCRETE SLOPE PAVEMENT. ONE-HALF INCH PREMOULDED EXPANSION JOINTS WITHOUT LOAD TRANSFERS SHALL BE FORMED ABOUT ALL STRUCTURES AND FEATURES PROJECTING THROUGH, IN OR AGAINST THE SLAB. THE SLAB SHALL BE GROOVED PARALLEL WITH AND AT RIGHT ANGLES TO THE UNDER ROADWAY CENTER LINE AT 6' CENTERS. DEPTH OF GROOVE TO BE NOT LESS THAN 1". SEE STANDARD DRAWING RD-SA-1 FOR LIMITS OF SLOPE PROTECTION.

NOTE: THE CONTRACTOR SHALL CHECK THE LOCATION OF ALL EXISTING SUBSTRUCTURES AND VERIFY SPAN LENGTHS BEFORE FABRICATING GIRDERS.

PILE TIP REINFORCEMENT: PILES SHALL BE EQUIPED WITH CAST STEEL POINTS. ALSO, SEE STANDARD DRAWING STD-5-1 FOR FURTHER NOTES.

SPECIAL NOTE FOR UTILITIES: IT IS INTENDED THAT THE COST OF MATERIALS AND LABOR NECESSARY FOR THE COMPLETE INSTALLATION OF UTILITIES SHALL BE BORNE BY OTHERS AND SHALL NOT BE PAID FOR AS A PART OF THIS CONTRACT. THE CONTRACTOR SHALL COOPERATE WITH OTHERS IN THE INSTALLATION OF UTILITIES WITH NO ADDITIONAL COMPENSATION ALLOWED THE CONTRACTOR AS A RESULT.

STEEL STRUCTURES: SEE TENNESSEE STANDARD SPECIFICATIONS SECTION 602 AND NOTES ON DRAWING NO. M-427-54.

WELDING: SEE SECTION 602 OF THE STANDARD SPECIFICATIONS AND NOTES ON DRAWING NO. MM-427-54.

RADIOGRAPHIC, ULTRASONIC, AND MAGNETIC INSPECTION: SEE SECTION 602 OF THE STANDARD SPECIFICATIONS AND NOTES ON DRAWING M-427-54.

PAINT: INORGANIC ZINC WITH URETHENE FINISH BRIGHT GREEN TOP COAT CONFORMING TO FEDERAL STANDARD 595A (FED. SPEC. NO. 24110).

PAINTING STRUCTURAL STEEL: ALL SURFACES OF STRUCTURAL STEEL GIRDERS MUST BE PAINTED. HOWEVER, THE FAYING SURFACES OF FIELD SPLICES, THE TOP OF THE TOP FLANGE, SURFACES EMBEDDED IN CONCRETE AND BEARING AREAS SHALL RECEIVE ONLY 1 MIL THICKNESS OF SHOP COAT. BOLTED FAYING SURFACES FOR THIS PROJECT ARE DESIGNED FOR A CLASS B SURFACE. (SEE AASHTO TABLE 10.32.3c). THE CONTRACTOR SHALL INSURE THE FAYING SURFACES ARE PREPARED TO PROVIDE A SLIP COEFFICIENT AT LEAST EQUAL TO THAT REQUIRED FOR THIS CLASS. THE FAYING SURFACES ARE TO BE PAINTED, AS NOTED ABOVE, AND THE CONTRACTOR SHALL SUPPLY A PAINT MANUFACTURER'S CERTIFICATION THAT THE PAINT TO BE USED WILL PROVIDE THE REQUIRED RESISTANCE AT THE PROPOSED THICKNESS WHEN TESTED IN ACCORDANCE WITH AASHTO 10.32.3.2.3.

CONCRETE SEALER: CONCRETE SEALER SHALL BE APPLIED TO SUBSTRUCTURES COINCIDING WITH EXPANSION JOINT LOCATIONS BEFORE PLACEMENT OF BEARING DEVICES AND APPLYING TEXTURE COATING. CONCRETE SEALER SHALL BE APPLIED TO THE FRONT VERTICAL FACE OF THE ABUTMENT BACKWALL, THE FRONT AND TOP OF THE ABUTMENT BEAM (PLUS CURTAIN WALLS, SUMP WALLS OR ANY OTHER FACES THAT ARE DEEMED NECESSARY BY THE ENGINEER). CONCRETE SHALL BE CLEAN AND DRY BEFORE APPLYING THE CONCRETE SEAL AND THE THICKNESS OF THE SEAL SHALL BE AS RECOMMENDED BY THE SEALANT MANUFACTURER. ACCEPTABLE CONCRETE SEALERS ARE INCLUDED IN THE QUALIFIED PRODUCTS LIST FOR NON-PENETRATING CONCRETE SEALS MAINTAINED BY THE DIVISION OF MATERIALS AND TESTS. THE SEALER SHALL BE CLEAR OR SIMILAR TO THE COLOR OF EXISTING CONCRETE SURFACES TO BE SEALED. THE COST OF THE SEALER, COMPLETE AND IN PLACE, SHALL BE INCLUDED IN THE UNIT PRICE OF THE EXPANSION DEVICE AT EACH SUBSTRUCTURE.

NOTE: THE CONTRACTOR SHALL SUPPORT THE ABUTMENTS UNTIL THE SUPERSTRUCTURE IS IN PLACE, FALSEWORK HAS BEEN REMOVED AND BACKFILLING HAS BEEN COMPLETED. AT EACH SUBSTRUCTURE.

WORKER PROTECTION: OUR MAINTENANCE RECORDS INDICATE THAT THIS BRIDGE WAS ORIGINALLY PAINTED WITH MATERIALS CONTAINING LEAD AND/OR CHROMATES AND THE CONTRACTOR SHALL BE REQUIRED TO PROCEED ACCORDINGLY TO TAKE ALL MANDATORY SAFEGUARDS PRESCRIBED BY THE STATE AND FEDERAL LAW FOR WORKER PROTECTION AND HAZARDOUS MATERIALS DISPOSAL.

CONST NO. 19005-3153-44

PROJECT NO.	YEAR	SHEET NO.
IM-40-4(73)206	2002	

REVISIONS

NO.	DATE	BY	BRIEF DESCRIPTION

BRIDGE JOINT SYSTEM NOTES

NEW STRIP SEAL EXTENSION SHALL BE ONFLEX STRIP SEAL SYSTEM. THE STEEL RETAINER SHALL BE WELDED (IN ALIGNMENT) TO EXISTING RETAINER.

NOTE: THE RUBBER GLAND SHALL BE ONE PIECE (NO SPLICES). THE EXISTING GLAND SHALL BE REMOVED, THE RETAINER CLEANED AND A ONE PIECE GLAND INSTALLED FROM MEDIAN BARRIER TO THE EDGE OF BRIDGE. BOND NEW ROBBER GLAND AT MEDIAN BARRIER TO EXISTING GLAND IN ACCORDANCE WITH MANUFACTURER'S INSTRUCTIONS. COST OF NEW STRIP SEAL (RETAINER LENGTH ONLY), REMOVAL OF GLAND, CLEANING EXISTING RETAINER, INSTALLATION OF NEW GLAND AND MISCELLANEOUS MATERIALS AND LABOR FOR COMPLETE STRIP SEAL INSTALLATION SHALL BE PAID FOR UNDER ITEM NO. 604-11.02.

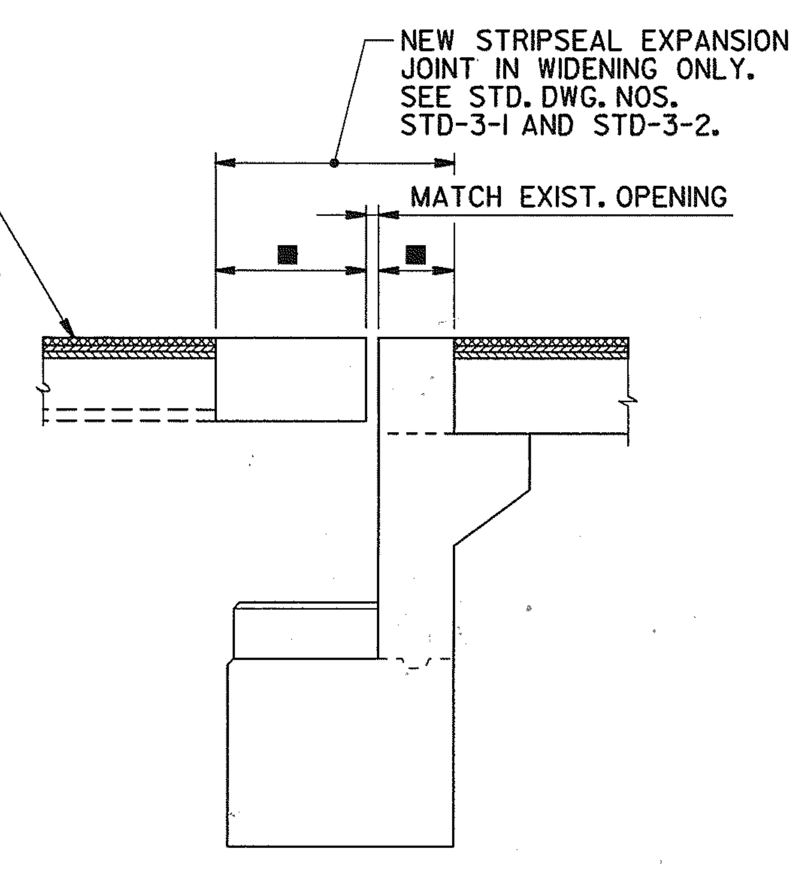

EXPANSION JOINT DETAIL

(TYPICAL AT ABUTMENTS)

▲ DENOTES: SEE SECTIONS 617 AND 906.04 OF THE TENNESSEE STANDARD SPECIFICATIONS FOR ROAD AND BRIDGE CONSTRUCTION.

■ DENOTES: NEW CONCRETE HEADER REQUIRED AT EACH SIDE OF JOINT. ACTUAL IN-PLACE HEADER WIDTH TO MATCH EXISTING.

NOTE: BRIDGE DECK SEALANT MEMBRANE, TDOT ITEM NO. 617-01 TO BE PLACED ON BRIDGE DECK SIDE OF JOINT ONLY.

NOTE: COST OF ALL LABOR AND MATERIALS NECESSARY TO INSTALL NEW EXPANSION JOINT, INCLUDING ANY MISCELLANEOUS MATERIALS TO BE INCLUDED IN THE PRICE BID FOR ITEM NO. 604-11.02, EXPANSION DEVICE (STRIP SEAL), L.F.

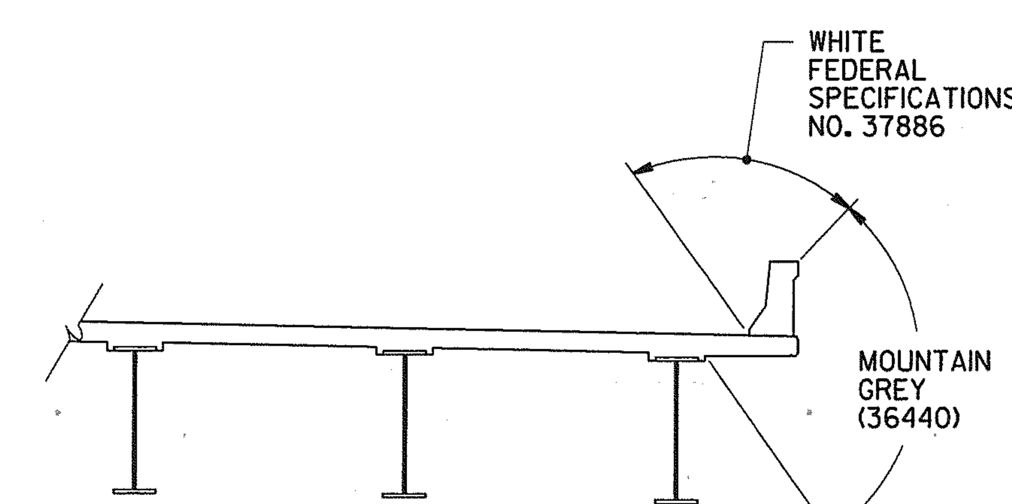

APPLIED TEXTURE FINISH DETAIL

FINISHING CONCRETE SURFACES: CONCRETE FINISHING SHALL BE IN ACCORDANCE WITH SECTION 604.22 OF THE TENNESSEE STANDARD SPECIFICATION. A CLASS I FINISH FOLLOWED BY AN APPLIED TEXTURE FINISH SHALL BE USED IN LIEU OF A CLASS II FINISH. NO TEXTURE FINISH SHALL BE APPLIED PRIOR TO COMPLETION OF PAVING AND HAULING OPERATIONS AT THE BRIDGE SITE. THE APPLIED TEXTURE FINISH SHALL BE MEASURED AND PAID FOR UNDER ITEM NOS. 604-04.01 AND 604-04.02.

IN ADDITION TO THE ABOVE REQUIREMENTS MOUNTAIN GREY (36440) SHALL BE USED ON ALL EXPOSED ABUTMENT AND BENT SURFACES.

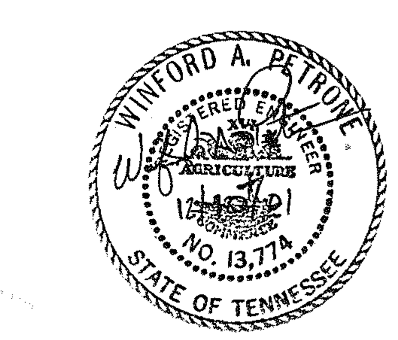

STATE OF TENNESSEE
DEPARTMENT OF TRANSPORTATION

GENERAL NOTES
WIDENING OF INTERSTATE 40
OVER
CSX RAILROAD AND CLINTON STREET
STATION 116+75.34 (LOG MI. 16.75)
BRIDGE ID. NO. 19I00400063 (RT. LN.)
DAVIDSON COUNTY
2002

DESIGNED BY R. POTIER DATE 12/01
DRAWN BY t. wilson DATE 12/01
SUPERVISED BY PETRONE DATE 12/01
CHECKED BY WILSON, PETRONE DATE 12/01

M-427-48

twilson 12/10/01 12:06:18 Plot 1 copies : D:\LOCAL\FULL\BOND\24952_I583848_8384Bnts-twilson.prf

CONST NO. 19005-3153-44

PROJECT NO.	YEAR	SHEET NO.
IM-40-4(73)206	2002	

REVISIONS

NO.	DATE	BY	BRIEF DESCRIPTION
1	2-06-02	W.A.P.	REV. FOOTNOTE 15, PAINTING NOTES AND ADDED PLAN OF SPAN NO. 1

ESTIMATED QUANTITIES

ITEM NO.	202-04.02	204-02.01	204-04.01	204-05	303-01.02	602-04.02	603-02.02	603-05.21	604-02.03	604-03.01	604-03.02	604-03.04	604-03.09
ITEM	REMOVAL OF STRUCTURES (BRIDGE NO. 2) (STA. 116+75.34) L.S. (4)	DRY EXCAVATION (BRIDGES) C.Y. (1)	ROCK EXCAVATION (BRIDGES) C.Y. (1)	ROCK DRILLING (BRIDGES) L.F.	GRANULAR BACKFILL (BRIDGES) TON (3)	STEEL STRUCTURES (BRIDGE NO. 2) L.S. (7)	REPAINTING EXISTING STEEL STRUCTURES (BRIDGE NO. 2) L.S. (15)	CONTAINMENT AND DISPOSAL OF WASTE (BRIDGE NO. 2) L.S.	EPOXY COATED REINFORCING STEEL LBS.	CLASS "A" CONCRETE (BRIDGES) C.Y. (8)	STEEL BAR REINFORCEMENT (BRIDGES) LBS.	PAVEMENT AT BRIDGE ENDS S.Y. (5)	CLASS "D" CONCRETE (BRIDGE DECK) C.Y.
SUPERSTRUCTURE									50,105				183
ABUTMENT NO. 1		10							384	14	1,988		
BENT NO. 1		10								20	2,836		
BENT NO. 2		8	2	12						19	2,881		
BENT NO. 3		20	2	12						20	2,981		
BENT NO. 4		30	4	12						20	3,131		
BENT NO. 5		24	4	12						20	3,069		
ABUTMENT NO. 2		10							349	13	1,914		
TOTAL	1	112	12	48	9	1	1	1	50,838	126	18,800	81	183

ESTIMATED QUANTITIES (CONT'D.)

ITEM NO.	604-04.01	604-04.02	604-11.02	606-03.03	606-03.06	617-02	617-05	620-03.10	709-04	710-09.01	710-09.02	714-01.02	908-21.04	908-21.05
ITEM	APPLIED TEXTURE FINISH (NEW STRUCTURES) S.Y.	APPLIED TEXTURE FINISH (EXIST. STRUCTURES) S.Y.	EXPANSION DEVICE (STRIP SEAL) (13) L.F. (14)	STEEL PILES (12 INCH) L.F.	PILE TIPS (STEEL PILES, 12 INCH) L.F. (12)	BRIDGE DECK CRACK SEALING L.F. (9)	SEALANT (HMWM) GAL. (10)	CONCRETE PARAPET (STD-1-1) (MODIFIED) L.F.	REINFORCED CONCRETE SLOPE PAVEMENT C.Y.	6" PERF. PIPE W/VERTICAL DRAIN SYSTEM L.F. (2)	6" PIPE UNDERDRAIN L.F.	STRUCTURAL LIGHTING (BRIDGE NO. 2) L.S. (11)	BEARINGS (5¾" THICK) EACH	BEARINGS (3½" THICK) EACH
SUPERSTRUCTURE														
ABUTMENT NO. 1			18	130	4					25	15		2	
BENT NO. 1				50	5								2	
BENT NO. 2														2
BENT NO. 3														
BENT NO. 4														2
BENT NO. 5													2	
ABUTMENT NO. 2			18	96	4					25	15		2	
TOTAL	745	1,813	36	276	13	454	7	454	27	50	30	1	8	4

FOOTNOTES

(1) EXCAVATION BASED ON EXISTING GROUND.

(2) COST OF POLYETHYLENE SHEETING AND ALL MISCELLANEOUS ITEMS NECESSARY FOR INSTALLATION TO BE INCLUDED IN THE UNIT PRICE BID FOR PERFORATED PIPE.

(3) GRANULAR BACKFILL SHALL BE CLASS "A" GRADING "D" MATERIAL. SEE STANDARD DRAWING STD-10-1.

(4) THE COST OF REMOVING THE EXTERIOR PORTION OF THE EXISTING SLAB, PORTIONS OF THE EXISTING ABUTMENT, LIGHT STANDARDS AND THE BRIDGERAIL SHALL BE INCLUDED IN THE PRICE BID FOR ITEM 202-04.02.

(5) PRIOR TO CONSTRUCTION OF THE PAVEMENT AT BRIDGE ENDS, THE CONTRACTOR SHALL SUBMIT A PROPOSED BILL OF STEEL TO THE ENGINEER FOR APPROVAL. IN ADDITION PRICE BID SHALL INCLUDE THE COST OF TWO (2) END OF BRIDGE DRAINS.

(6) THE COST OF BITUMINOUS-FIBERBOARD, AND ALL MISCELLANEOUS JOINT MATERIAL TO BE INCLUDED IN THE UNIT PRICE BID FOR OTHER ITEMS.

(7) LUMP SUM: TOTAL ESTIMATED WEIGHT OF 160,300 LBS. OF GRADE 36 STRUCTURAL STEEL, INCLUDES PLATES, ANGLES, SHEAR STUDS, BOLTS, ETC. ALSO SEE TENNESSEE STANDARD SPECIFICATIONS SECTION 602.49 AND 602.50.

(8) THE COST OF ALL MATERIALS AND LABOR NECESSARY FOR THE INSTALLATION OF 2 ANCHOR BOLT ASSEMBLIES, 2-½" THICK ELASTOMERIC PADS WITH 1" LOAD PLATES AT BENT NO. 3 SHALL BE INCLUDED IN THE UNIT PRICE BID FOR ITEM 604-03.01, CLASS "A" CONCRETE (BRIDGES).

(9) INCLUDES ALL COST FOR INSTALLING THE BRIDGE DECK CRACK SEALER (HMWM) INCLUDING CRACK PREPARATION, CLEANING, LABOR, AND ALL MISCELLANEOUS MATERIALS REQUIRED TO SEAL THE LONGITUDINAL CONSTRUCTION JOINT ACCORDING TO SPECIAL PROVISION 604CR AND MANUFACTURERS SPECIFICATIONS. THIS ITEM DOES NOT INCLUDE THE COST OF FURNISHING THE BRIDGE CRACK SEALANT ITSELF.

(10) INCLUDES ALL COST FOR FURNISHING THE SEALER MATERIAL (HMWM) FOR SEALING CRACKS. THE SEALER (HMWM) SHALL BE IN ACCORDANCE WITH SPECIAL PROVISION 604CR.

(11) LUMP SUM FOR STRUCTURAL LIGHTING, ITEM NO. 714-01.02 INCLUDES 850 FT. 2" CONDUIT WITH PULL WIRES, 2 JUNCTION BOXES, 2 PULL BOXES, 8-ANCHOR BOLTS AND ALL OTHER NECESSARY MATERIALS FOR INSTALLATION OF STRUCTURAL LIGHTING.

(12) THE UNIT PRICE BID FOR THE CAST STEEL POINTS SHALL INCLUDE FURNISHING AND INSTALLATION TO THE PILES.

(13) THE EXPANSION JOINT AT ABUTMENT NOS. 1 AND 2 SHALL BE IN ACCORDANCE WITH SPECIAL PROVISION 604S AND STANDARD DRAWING STD-3-1 AND STD-3-2. THE TOTAL REQUIRED MOVEMENT IS 4 INCHES. SHOP DRAWINGS SHALL BE SUBMITTED TO THE ENGINEER OF STRUCTURES FOR APPROVAL.

(14) THE PRICE BID FOR ROADWAY EXPANSION DEVISE TO INCLUDE THE COST OF 32 S.Y. OF CONCRETE SEAL REQUIRED. SEE GENERAL NOTES FOR DESCRIPTION OF CONCRETE SEAL.

⚠1 (15) INCLUDES ALL LABOR AND MATERIALS NECESSARY FOR SURFACE PREPARATION AND PAINTING OF THE FOLLOWING ITEMS:
30 EXISTING BEARING DEVICES AT ABUTMENT NOS. 1 AND 2.
AREAS OF DAMAGED PAINT ON GIRDERS AND DIAPHRAGMS AS DENOTED IN DETAIL ON THIS SHEET.
APPROXIMATE WEIGHT = 47,000 LBS.
SEE CLEANING AND PAINTING NOTES, THIS SHEET.

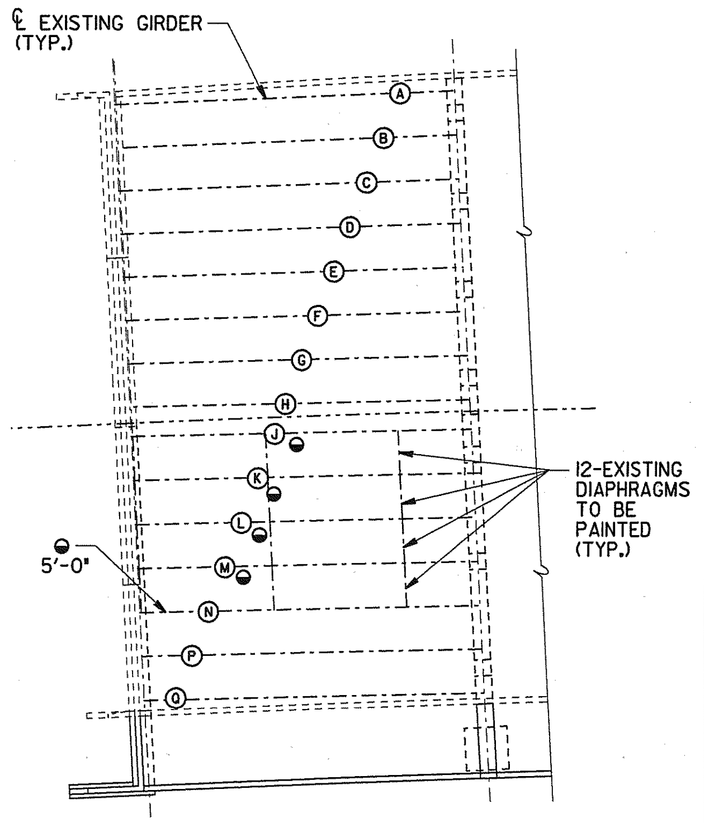

PLAN OF SPAN NO. 1 ⚠1

(SHOWING EXISTING AREAS OF DAMAGED PAINT TO BE REPAINTED)

◒ DENOTES: CLEAN AND PAINT GIRDERS "J" THRU "M" AND ONESIDE OF GIRDER "N" FOR 5'-0".

CLEANING AND PAINTING NOTES ⚠1

ALL ABUTMENT BEARING DEVICES AND SELECTED GIRDERS AND DIAPHRAGMS SHALL BE CLEANED AND PAINTED. CLEANING SHALL BE IN ACCORDANCE WITH TENNESSEE STANDARD SPECIFICATION SECTION 603.05(a). HAND OR POWER TOOL CLEANING SHALL REMOVE ALL RUST, SCALE, LOOSE PAINT AND DIRT. AFTER CLEANING, THE BEARINGS SHALL BE PAINTED WITH AN APPROVED EPOXY MASTIC PAINT APPLIED AT A MINIMUM DRY FILM THICKNESS OF 4.0 MILS. THE COLOR OF THE FINISH COAT SHALL COMPLY WITH FEDERAL STANDARD NO. 595A, FEDERAL SPECIFICATION NO. 24110 (BRIGHT GREEN). SEE SECTIONS 603 AND 910 OF THE STANDARD SPECIFICATIONS.

SEE TENNESSEE DEPARTMENT OF TRANSPORTATION'S QUALIFIED PRODUCTS LIST FOR ACCEPTABLE BRANDS OF EPOXY MASTIC. ALL PRODUCTS USED, INCLUDING THINNERS SHALL BE SUPPLIED BY THE SAME MANUFACTURER.

APPLICATION: THE COATING APPLICATOR SHALL FOLLOW THE MANUFACTURER'S PRINTED INSTRUCTIONS AND SHALL HAVE THESE INSTRUCTIONS ON SITE DURING THE COURSE OF THE WORK.

STATE OF TENNESSEE
DEPARTMENT OF TRANSPORTATION

ESTIMATED QUANTITIES
WIDENING OF INTERSTATE 40
OVER
CSX RAILROAD AND CLINTON STREET
STATION 116+75.34 (LOG MI. 16.75)
BRIDGE ID. NO. 19I00400063 (RT. LN.)
DAVIDSON COUNTY
2002

M-427-49

DESIGNED BY	R. POTIER	DATE	12/01
DRAWN BY	T. WILSON	DATE	12/01
SUPERVISED BY	PETRONE	DATE	12/01
CHECKED BY	WILSON, PETRONE	DATE	12/01

TWilson
2/7/02
12:54:08
Plot Scale: 1 copies 1
D:\LOCAL\FILL\GOND\29095_583848_8384ant_TWilson.prf

CONST NO. 19005-3153-44

PROJECT NO.	YEAR	SHEET NO.
IM-40-4(73)206	2002	

REVISIONS

NO.	DATE	BY	BRIEF DESCRIPTION

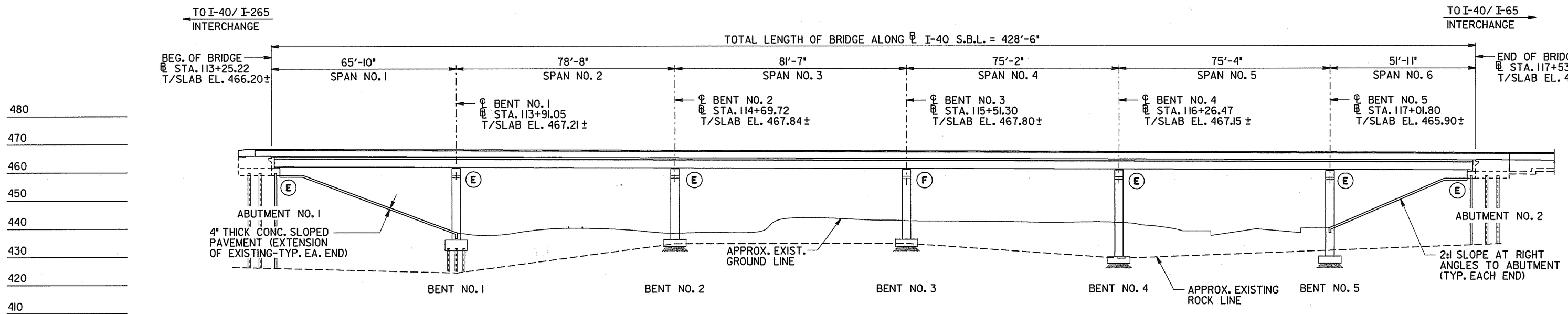

ELEVATION

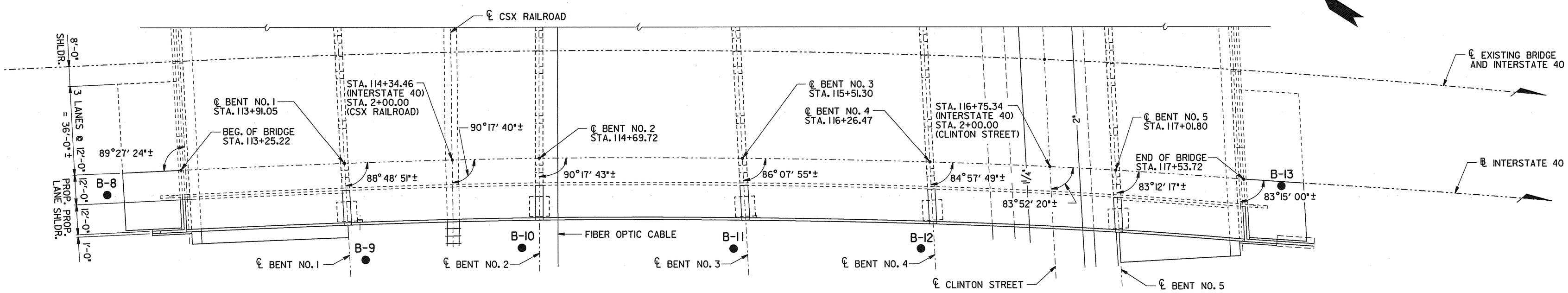

PLAN

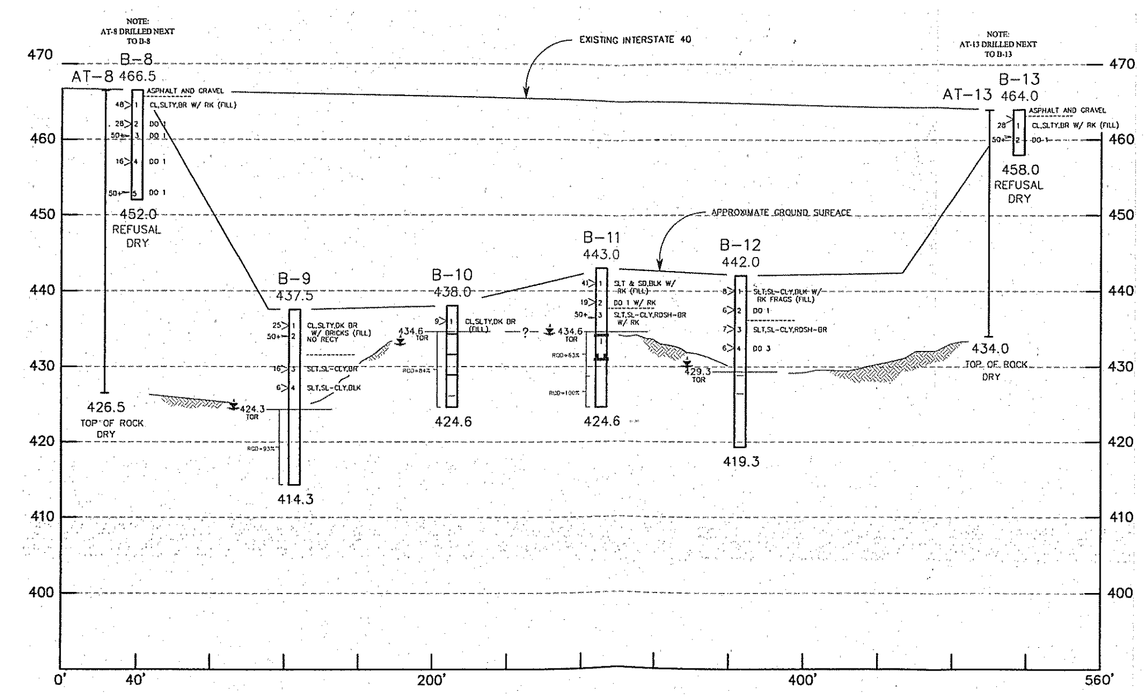

STATE OF TENNESSEE
DEPARTMENT OF TRANSPORTATION

FOUNDATION DATA
WIDENING OF INTERSTATE 40
OVER
CSX RAILROAD AND CLINTON STREET
STATION 116+75.34 (LOG MI. 16.75)
BRIDGE ID. NO. 19I00400063 (RT. LN.)
DAVIDSON COUNTY
2002

REQUIRED INFORMATION

APPROXIMATE EXISTING GROUND LINE AND ROCK LINE.

SUFFICIENT GROUND AND CORING INFORMATION FOR BRIDGE FOUNDATION.

NOTE

THIS SHEET IS FOR FOUNDATION INVESTIGATION PURPOSE ONLY AND IS NOT TO BE USED FOR FINAL CONSTRUCTION STAKE-OUT PURPOSES.

DESIGNED BY R. POTIER DATE 12/01
DRAWN BY t. wilson DATE 12/01
SUPERVISED BY PETRONE DATE 12/01
CHECKED BY WILSON, PETRONE DATE 12/01

twwilson
12/06/01
Project Models
D:\LOCAL\FULL\BOND\24952.153948.839486fnd.twwilson.prf

M-427-50

CONST NO. 19005-3153-44

PROJECT NO.	YEAR	SHEET NO.
IM-40-4(73)206	2002	

REVISIONS

NO.	DATE	BY	BRIEF DESCRIPTION

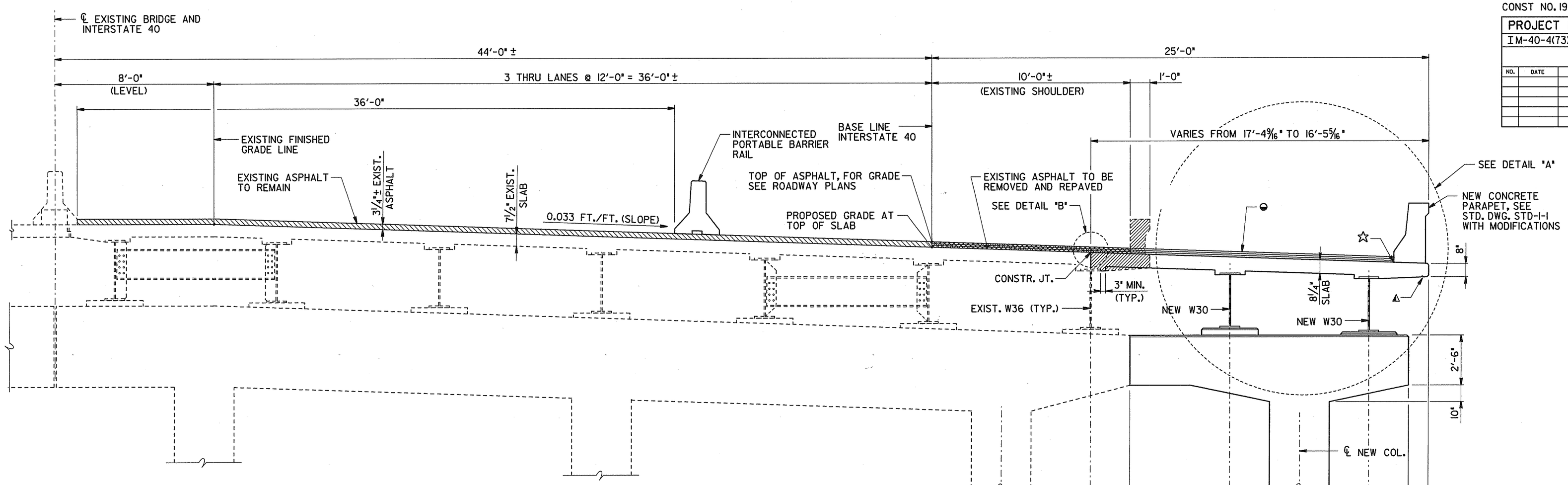

TYPICAL CROSS SECTION

(DIMENSIONS GIVEN AT RIGHT ANGLES TO BASELINE UNLESS NOTED OTHERWISE)

SCALE: 3/8" = 1'-0"

DENOTES: AREA OF EXISTING STRUCTURE TO BE REMOVED.

▲ DENOTES: 1" TRIANGULAR NOTCH DRIP BEAD TO RUN FULL LENGTH OF SLAB. (TYP.)

☆ DENOTES: CONTRACTOR TO SEAL LONGITUDINAL DECK CRACK WITH (HMWM) CRACK SEALANT.

◒ DENOTES: FOR NEW ASPHALT ON TOP OF NEW 8 1/4" SLAB, SEE DETAIL "B" AND ROADWAY PLANS FOR BRIDGE DECK ASPHALT OVERLAY DETAIL.

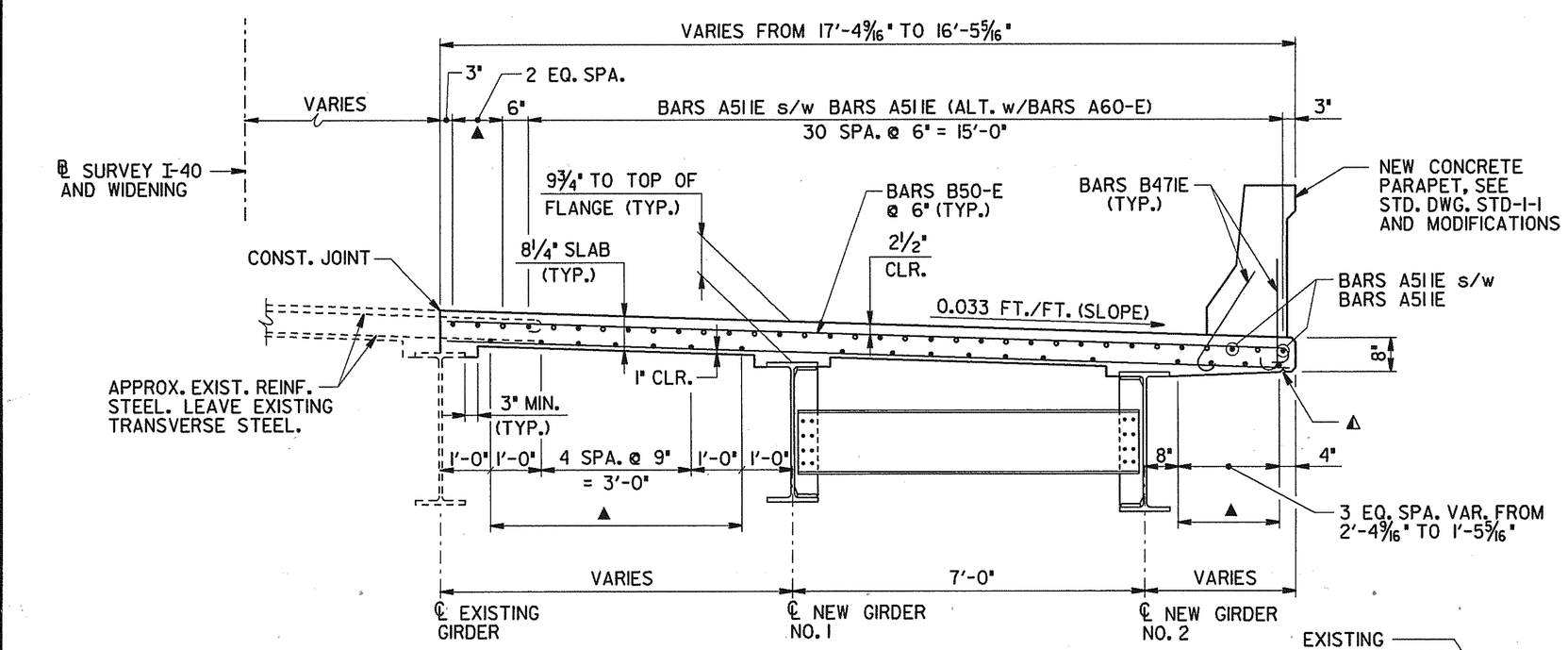

DETAIL "A"

▲ DENOTES: BARS A511E s/w BARS A511E s/w SERIES BARS A512E

NOTE: PROVISIONS SHALL BE MADE DURING SLAB REMOVAL TO PROTECT THE EXISTING TRANSVERSE REINFORCEMENT. THE EXISTING REINFORCING STEEL SHALL BE COMPLETELY CLEANED, REALIGNED AND INCORPORATED INTO THE NEW SLAB CONSTRUCTION.

NOTE: WHEN POURING SLAB, PROVISIONS SHALL BE MADE FOR SETTING REINFORCING STEEL FOR PARAPET. THE PARAPET SHALL NOT BE POURED UNTIL THE SLAB IS POURED AND CURED. ALSO SEE DRAWING NO. STD-I-I.

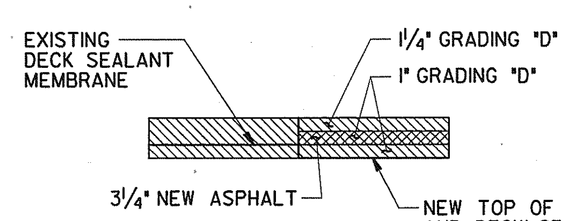

DETAIL "B"

✱ ONE (1) LAYER OF BRIDGE DECK SEALANT MEMBRANE SHALL BE PLACED ACROSS THE SLAB CONSTRUCTION JOINT FOR FULL LENGTH OF BRIDGE. A BONDCOAT OF ACCEPTABLE ADHESIVE SHALL BE APPLIED DIRECTLY TO THE BRIDGE DECK IN ACCORDANCE WITH THE MEMBRANE MANUFACTURER'S RECOMMENDATIONS JUST PRIOR TO PLACING THE MEMBRANE. COST OF MEMBRANE, BONDING ADHESIVE AND ALL OTHER MATERIALS, EQUIPMENT AND LABOR NECESSARY FOR INSTALLATION AS SHOWN SHALL BE INCLUDED UNDER ITEM NO. 617-01, BRIDGE DECK SEALANT.

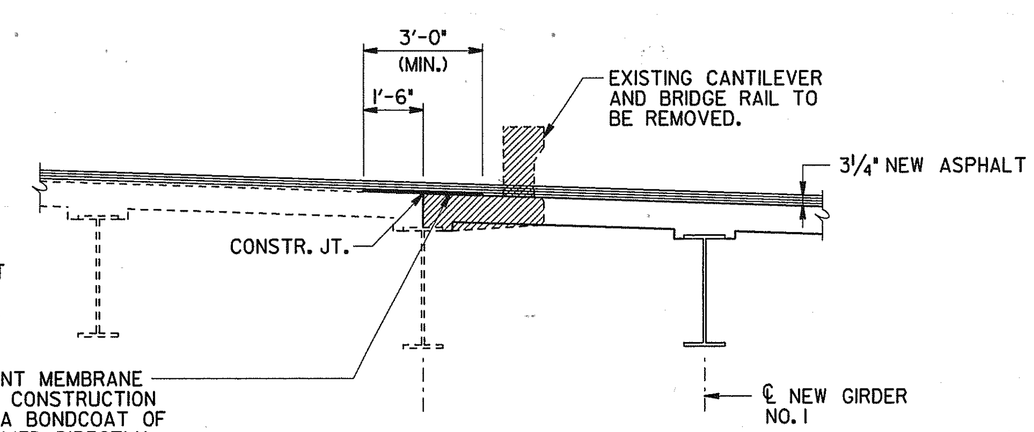

DECK SEALANT DETAIL

✱ DENOTES: SEE SECTIONS 617 AND 906.04 OF THE TENNESSEE STANDARD SPECIFICATIONS FOR ROAD AND BRIDGE CONSTRUCTION.

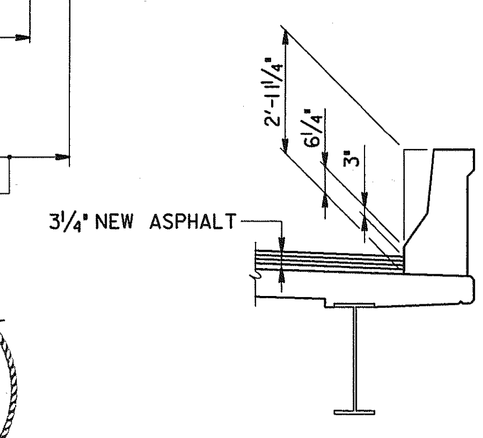

MODIFICATION TO PARAPET HEIGHT

NOTE: FOR DIMENSIONS AND DETAILS NOT SHOWN, SEE DWG. STD-I-I. ADD 3" TO ALL VERTICAL BAR LENGTHS.

WINFORD A. PETRONE REGISTERED ENGINEER AGRICULTURE 12/31/01 NO. 13,774 STATE OF TENNESSEE

ESTIMATED QUANTITIES

CLASS "D" CONCRETE (BRIDGE DECK) C.Y.	EPOXY COATED REINFORCING STEEL LBS.
183	50,105

STATE OF TENNESSEE
DEPARTMENT OF TRANSPORTATION

SUPERSTRUCTURE
WIDENING OF INTERSTATE 40
OVER
CSX RAILROAD AND CLINTON STREET
STATION 116+75.34 (LOG MI. 16.75)
BRIDGE ID. NO. 19100400063 (RT. LN.)
DAVIDSON COUNTY
2002

M-427-51

DESIGNED BY	R. POTIER	DATE	12/01
DRAWN BY	CANNON, WILSON	DATE	12/01
SUPERVISED BY	PETRONE	DATE	12/01
CHECKED BY	WILSON, PETRONE	DATE	12/01

twellison
12/10/01
10:20:10
Plot: rcoplot
DN:\LOCALVOL1\DGN\24952.DGN\8348\str_twellison.prf

CONST NO. 19005-3153-44

PROJECT NO.	YEAR	SHEET NO.
IM-40-4(73)206	2002	

REVISIONS

NO.	DATE	BY	BRIEF DESCRIPTION

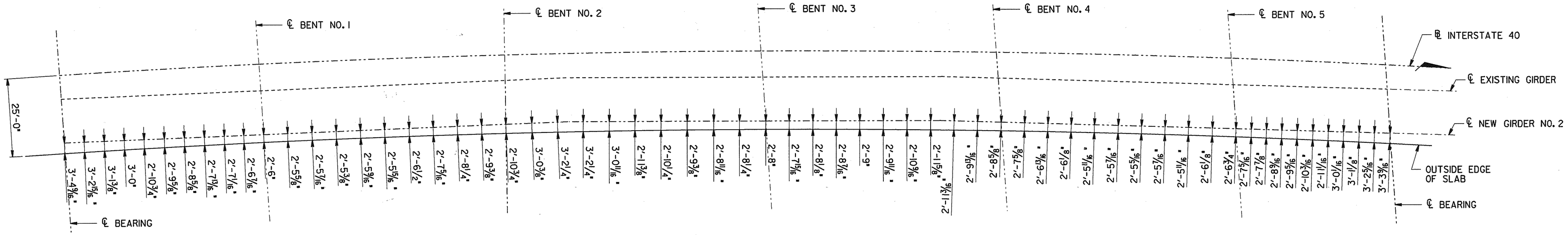

SLAB OFF-SETS

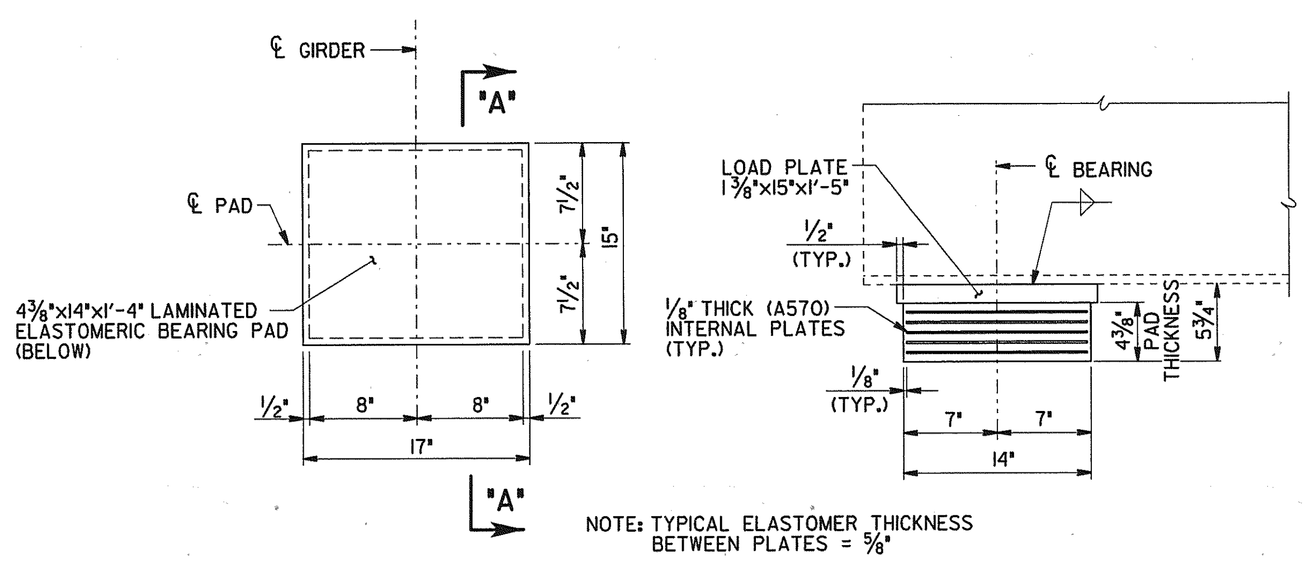

NOTE: TYPICAL ELASTOMER THICKNESS BETWEEN PLATES = ⅝"

PLAN

SECTION "A-A"

BEARING DETAILS AT ABUTMENTS AND BENT NOS. 1 AND 5

(8-REQUIRED)

NOTE: COST OF 4⅜" LAMINATED ELASTOMERIC BEARING PADS AND LOAD PLATES TO BE INCLUDED IN THE PRICE BID FOR ITEM NO. 908-21.04, BEARINGS (5¾" THICK).

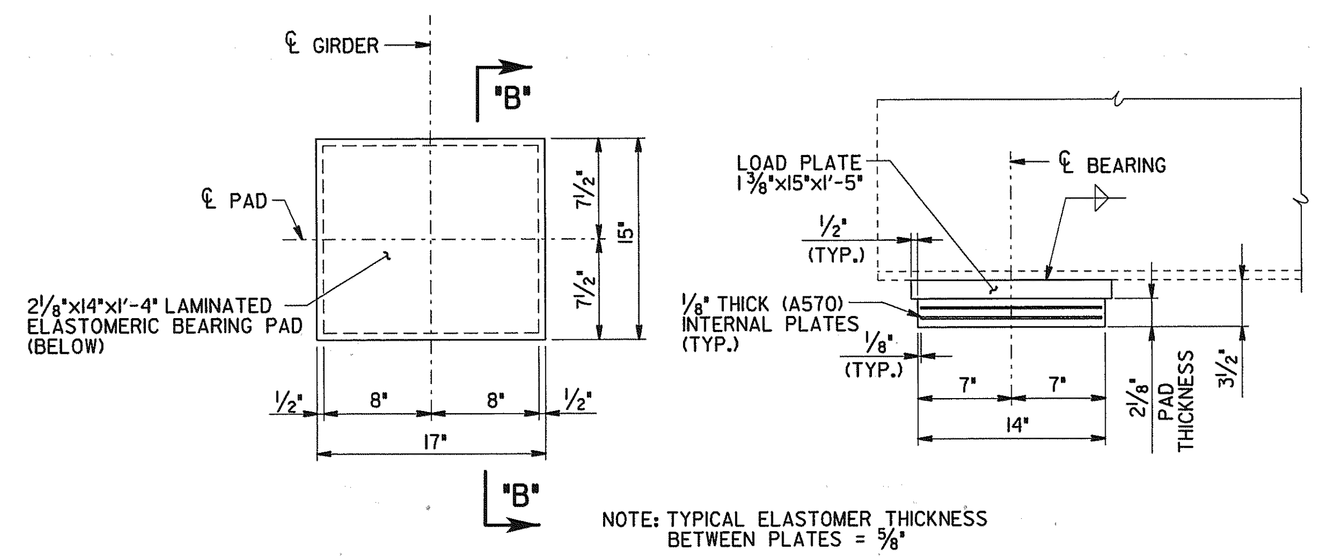

NOTE: TYPICAL ELASTOMER THICKNESS BETWEEN PLATES = ⅝"

PLAN

SECTION "B-B"

BEARING DETAILS AT BENT NOS. 2 AND 4

(4-REQUIRED)

NOTE: COST OF 2⅛" LAMINATED ELASTOMERIC BEARING PADS AND LOAD PLATES TO BE INCLUDED IN THE PRICE BID FOR ITEM NO. 908-21.05, BEARINGS (3½" THICK).

NOTE: ELASTOMERIC PORTION OF BEARING PAD SHALL BE FACTORY BONDED TO LOAD PLATE.

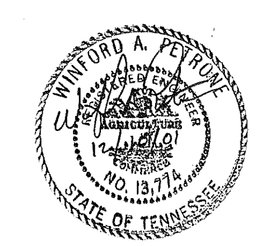

STATE OF TENNESSEE
DEPARTMENT OF TRANSPORTATION

SUPERSTRUCTURE DETAILS
WIDENING OF INTERSTATE 40
OVER
CSX RAILROAD AND CLINTON STREET
STATION 116+75.34 (LOG MI. 16.75)
BRIDGE ID. NO. 19I00400063 (RT. LN.)
DAVIDSON COUNTY
2002

DESIGNED BY	R. POTIER	DATE	12/01
DRAWN BY	T. WILSON	DATE	12/01
SUPERVISED BY	PETRONE	DATE	12/01
CHECKED BY	WILSON, PETRONE	DATE	12/01

M-427-52

twilson
12/10/01
12:07:13
pw:\\COALVILL\DGN0\24952.053846.83846sdt.twilson.pr:f
DGN:LOCALVILL\DGN0\24952.053846.83846sdt.twilson.prf

CONST NO. 19005-3153-44

PROJECT NO.	YEAR	SHEET NO.
IM-40-4(73)206	2002	

REVISIONS

NO.	DATE	BY	BRIEF DESCRIPTION

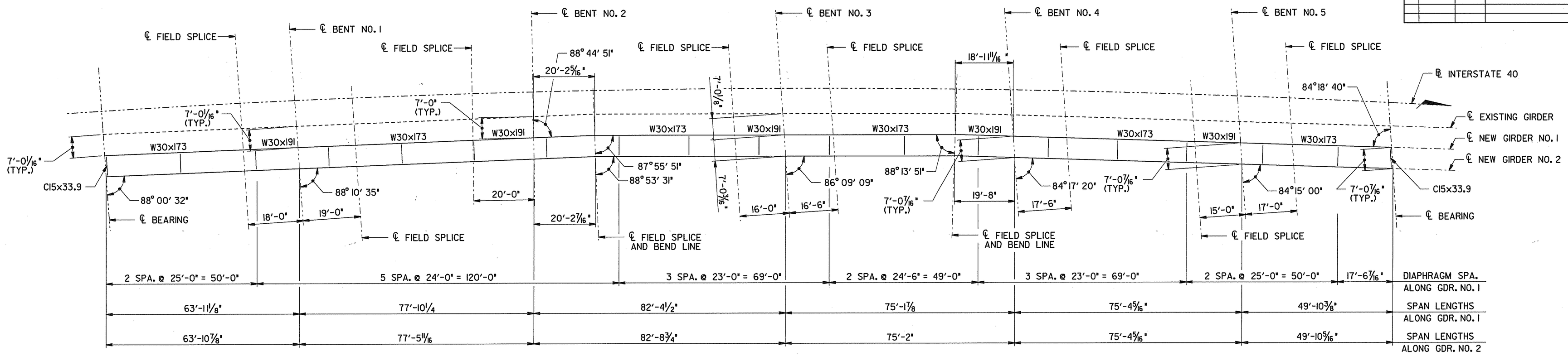

FRAMING PLAN

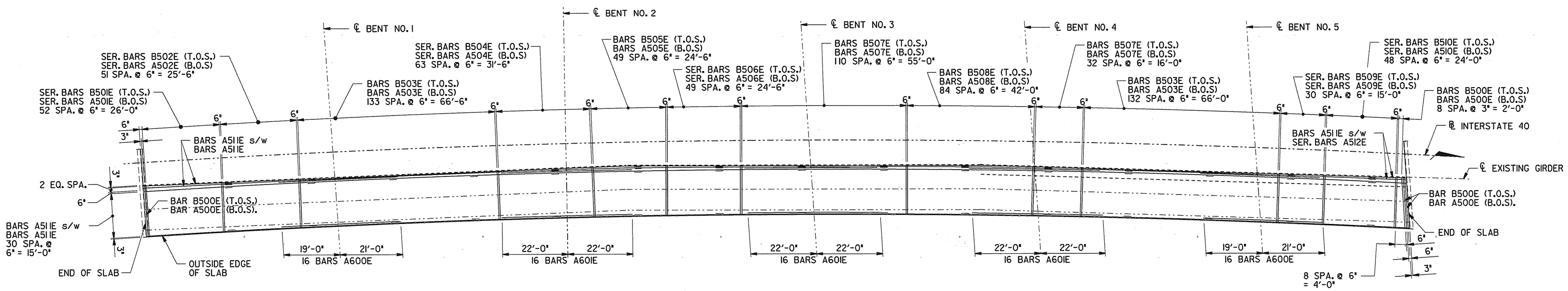

SLAB PLAN

NOTE: MIN. LAP NO. 5 BARS = 2'-7"

STATE OF TENNESSEE
DEPARTMENT OF TRANSPORTATION

WINFORD A. PETRONE
REGISTERED ENGINEER
AGRICULTURE
NO. 13,775
STATE OF TENNESSEE

FRAMING PLAN
WIDENING OF INTERSTATE 40
OVER
CSX RAILROAD AND CLINTON STREET
STATION 116+75.34 (LOG MI. 16.75)
BRIDGE ID. NO. 19I00400063 (RT. LN.)
DAVIDSON COUNTY
2002

M-427-53

DESIGNED BY R. POTIER DATE 12/01
DRAWN BY t. wilson DATE 12/01
SUPERVISED BY PETRONE DATE 12/01
CHECKED BY WILSON, PETRONE DATE 12/01

twilson
12/20/01
12:07:24
$IN_LOC/JALSBLT_36N00X24952_I583848_B3848sd2_twilson.prf

CONST NO. 19005-3153-44

PROJECT NO.	YEAR	SHEET NO.
IM-40-4(73)206	2002	

REVISIONS

NO.	DATE	BY	BRIEF DESCRIPTION

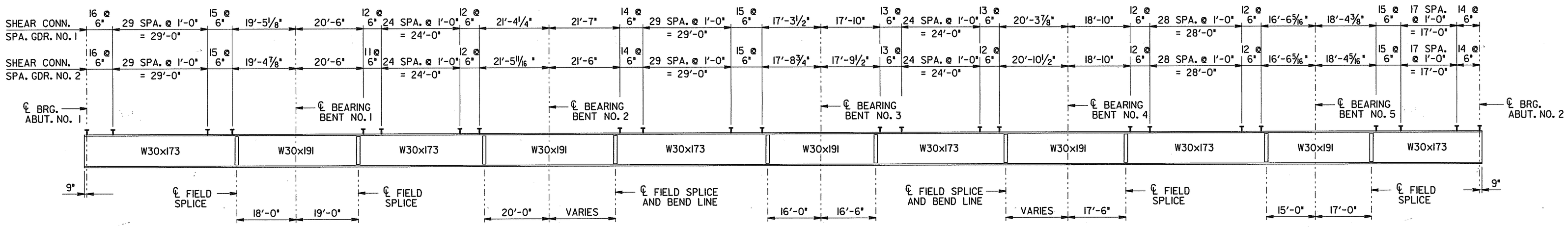

GIRDER ELEVATION

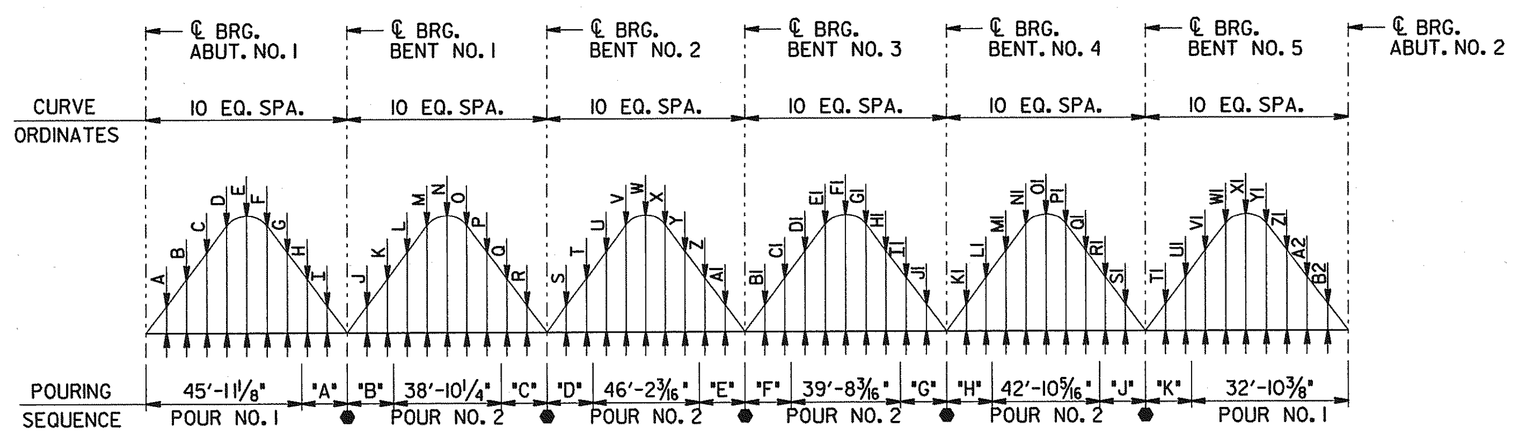

DEAD LOAD CORRECTION AND POURING SEQUENCE

(GIRDERS NO. 1 AND NO. 2)

● DENOTES: POUR NO. 3

TABLE OF DIMENSIONS

"A"	"B"	"C"	"D"	"E"
18'-0"	19'-0"	20'-0"	20'-2 5/16"	16'-0"
"F"	"G"	"H"	"J"	"K"
16'-6"	18'-11 11/16"	17'-6"	15'-0"	17'-0"

NOTES

APPROVAL OF MATERIALS: NO FABRICATION SHALL BE STARTED UNTIL THE MATERIALS INVOLVED HAVE BEEN APPROVED BY THE TENNESSEE DEPARTMENT OF TRANSPORTATION, DIVISION OF MATERIALS AND TESTS.

IDENTITY OF MAIN MATERIALS: SEE SECTION 602 OF THE STANDARD SPECIFICATIONS.

STRUCTURAL STEEL: SHALL CONFORM TO AASHTO M270 (ASTM A709) GRADE 36 UNLESS OTHERWISE NOTED. ALL STRUCTURAL STEEL FOR GIRDER FLANGES IN TENSION AND ALL WEBS SHALL MEET THE SUPPLEMENTAL REQUIREMENTS FOR LONGITUDINAL CHARPY V-NOTCH TESTS SPECIFIED IN AASHTO MATERIAL SPECIFICATIONS. ZONE 2 OF NON-FRACTURE CRITICAL CRITERIA SHALL APPLY.

WELDING: ANSI/AASHTO/AWS BRIDGE WELDING CODE (LATEST EDITION) AND SECTION 602 OF THE STANDARD SPECIFICATIONS.

FIELD CONNECTIONS: SHALL BE 7/8" DIA. HIGH TENSILE STRENGTH BOLTS ASTM-A325 UNLESS OTHERWISE SHOWN. SEE AASHTO SPECIFICATIONS ART. 11.3.2 DIVISION II AND SECTION 602 OF THE STANDARD SPECIFICATIONS.

ADDITIONAL FIELD SPLICE NOTE: FIELD SPLICES NECESSARY DUE TO LENGTHS INVOLVED MAY BE ADDED BY THE FABRICATOR SUBJECT TO APPROVAL BY THE ENGINEER AND SHALL BE AT NO ADDITIONAL COST TO THE PROJECT.

SHOP ASSEMBLY: PROGRESSIVE SHOP ASSEMBLY WILL BE ALLOWED. SEE AASHTO STANDARD SPECIFICATIONS FOR HIGHWAY BRIDGES, ART. 11.5.3.1 DIVISION II.

TABLE OF DIMENSIONS

	ITEM	A	B	C	D	E	F	G	H	I	J	K	L	M	N	O	P	Q	R	S	T	U	V	W	X	Y	Z	AI	BI	CI	DI	EI	FI	GI	HI	II	JI	KI	LI	MI	NI	OI	PI	QI	RI	SI	TI	UI	VI	WI	XI	YI	ZI	A2	B2
TOTAL DEAD LOAD	GIRDER NO. 1	5/16"	9/16"	3/4"	13/16"	13/16"	11/16"	1/2"	1/4"	1/16"	1/16"	5/16"	9/16"	5/8"	11/16"	1/4"	0	1/4"	0	3/16"	1/2"	7/8"	1 1/8"	1 3/16"	1 1/8"	15/16"	5/8"	1/4"	0	3/16"	3/8"	7/16"	9/16"	1/2"	3/8"	3/16"	0	3/16"	3/8"	11/16"	7/8"	15/16"	7/8"	11/16"	7/16"	3/16"	0	0	0	1/16"	3/16"	3/16"	3/16"	1/8"	1/16"
	GIRDER NO. 2	5/16"	9/16"	3/4"	13/16"	13/16"	11/16"	1/2"	1/4"	1/16"	1/16"	5/16"	1/2"	5/8"	11/16"	1/4"	0	1/4"	0	3/16"	9/16"	15/16"	1 3/16"	1 1/4"	1 3/16"	15/16"	5/8"	1/4"	0	3/16"	3/8"	7/16"	9/16"	7/16"	3/8"	3/16"	0	3/16"	3/8"	11/16"	7/8"	15/16"	7/8"	11/16"	7/16"	3/16"	0	0	0	1/16"	3/16"	3/16"	3/16"	1/8"	1/16"
GIRDER DEAD LOAD	GIRDER NO. 1	0	1/16"	1/8"	1/8"	1/8"	1/8"	1/16"	0	0	0	0	1/16"	1/16"	1/16"	1/16"	1/16"	0	0	0	1/16"	1/8"	3/16"	3/16"	3/16"	1/8"	1/16"	0	0	0	1/16"	1/16"	1/16"	1/16"	1/16"	0	0	0	1/16"	1/8"	1/8"	1/8"	1/8"	1/8"	1/16"	0	0	0	0	0	0	0	0	0	0
	GIRDER NO. 2	0	1/16"	1/8"	1/8"	1/8"	1/8"	1/16"	0	0	0	0	1/16"	1/16"	1/16"	1/16"	1/16"	0	0	0	1/16"	1/8"	3/16"	3/16"	3/16"	1/8"	1/16"	0	0	0	1/16"	1/16"	1/16"	1/16"	1/16"	0	0	0	1/16"	1/8"	1/8"	1/8"	1/8"	1/8"	1/16"	0	0	0	0	0	0	0	0	0	0

DEAD LOAD CORRECTION CURVE: GIRDERS SHALL BE CAMBERED TO COMPENSATE FOR DEAD LOAD DEFLECTION AND VERTICAL CURVE.

DECK CONCRETE POURING SEQUENCE: ALL POURS SHALL BE MADE IN NUMERICAL SEQUENCE.

NOTE: THE CONCRETE DECK SHALL NOT BE POURED UNTIL ALL STRUCTURAL STEEL IS ERECTED AND ALL WELDING OR BOLTING IS COMPLETE. THE CONTRACTOR SHALL MAKE ADEQUATE PROVISIONS DURING PLACEMENT OF THE SLAB TO PREVENT THE EXTERIOR BEAM FROM TWISTING. NO PORTION OF THE PARAPET SHALL BE POURED UNTIL THE ENTIRE SLAB IS IN PLACE, UNLESS REQUIRED BY STAGE CONSTRUCTION.

STATE OF TENNESSEE
DEPARTMENT OF TRANSPORTATION

WINFORD A. PETRONE
REGISTERED ENGINEER
CIVIL
12/20/01
NO. 13,774
STATE OF TENNESSEE

STRUCTURAL STEEL DETAILS
WIDENING OF INTERSTATE 40
OVER
CSX RAILROAD AND CLINTON STREET
STATION 116+75.34 (LOG MI. 16.75)
BRIDGE ID. NO. 19100400063 (RT. LN.)
DAVIDSON COUNTY
2002

M-427-54

DESIGNED BY R. POTIER DATE 12/01
DRAWN BY t. wilson DATE 12/01
SUPERVISED BY PETRONE DATE 12/01
CHECKED BY WILSON, PETRONE DATE 12/01

twilson
12/20/01
Plot 1:1
PlotScale: 1.0000 inches = 1 unit
DVLOCALVILLDNO$24952_563948_853848ssl_twilson.prf

CONST NO. 19005-3153-44

PROJECT NO.	YEAR	SHEET NO.
IM-40-4(73)206	2002	

REVISIONS

NO.	DATE	BY	BRIEF DESCRIPTION

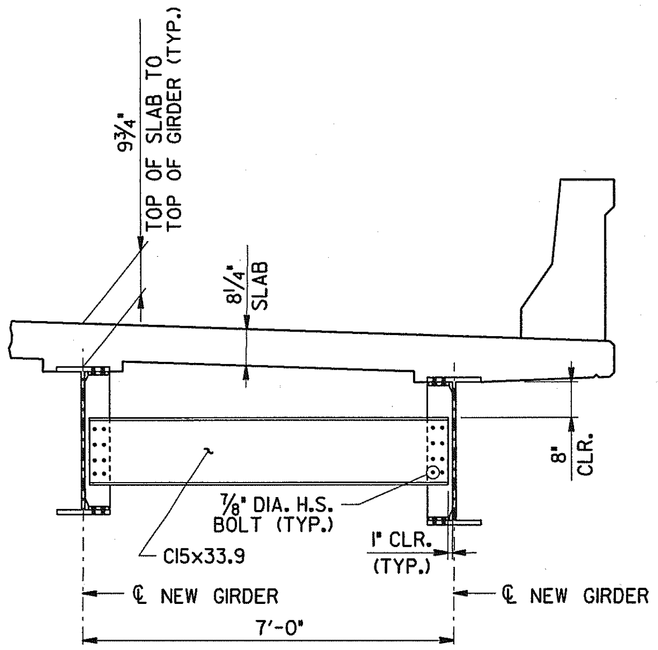

INTERMEDIATE DIAPHRAGMS

(AT NEW GIRDERS)

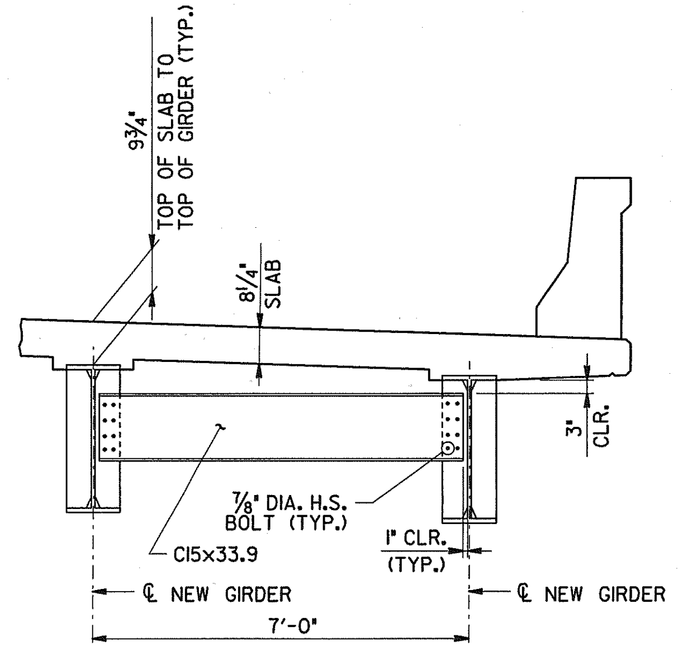

SUPPORT DIAPHRAGM AT ABUTMENTS

(AT NEW GIRDERS)

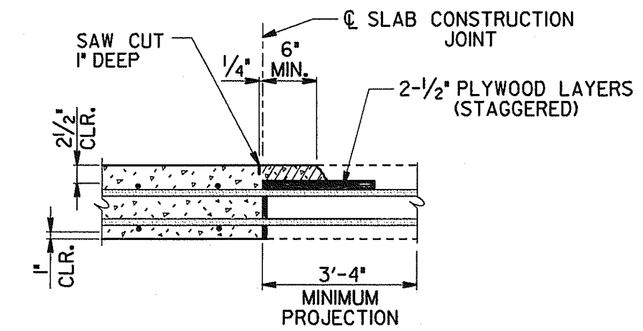

TRANSVERSE SLAB CONSTRUCTION JOINT DETAIL

NOTE: THE CONTRACTOR SHALL MAKE ADEQUATE PROVISIONS DURING PLACEMENT OF SLAB TO PREVENT THE EXTERIOR BEAM FROM TWISTING. NO EQUIPMENT SHALL BE PERMITTED ON THE BRIDGE UNTIL ALL POURS ARE MADE AND THE CONCRETE IS PROPERLY CURED.

NOTE: ALL SLAB CONSTRUCTION JOINTS SHALL BE IN ACCORDANCE WITH THE SLAB CONSTRUCTION JOINT DETAIL.

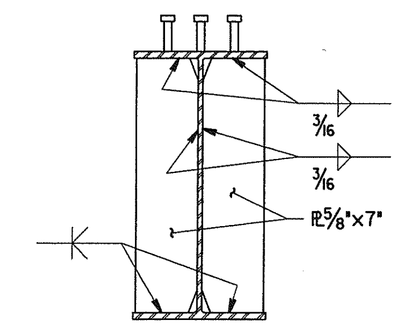

BEARING STIFFENER DETAIL

(AT ABUTMENTS)

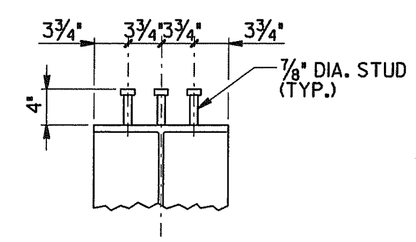

STUD DETAIL

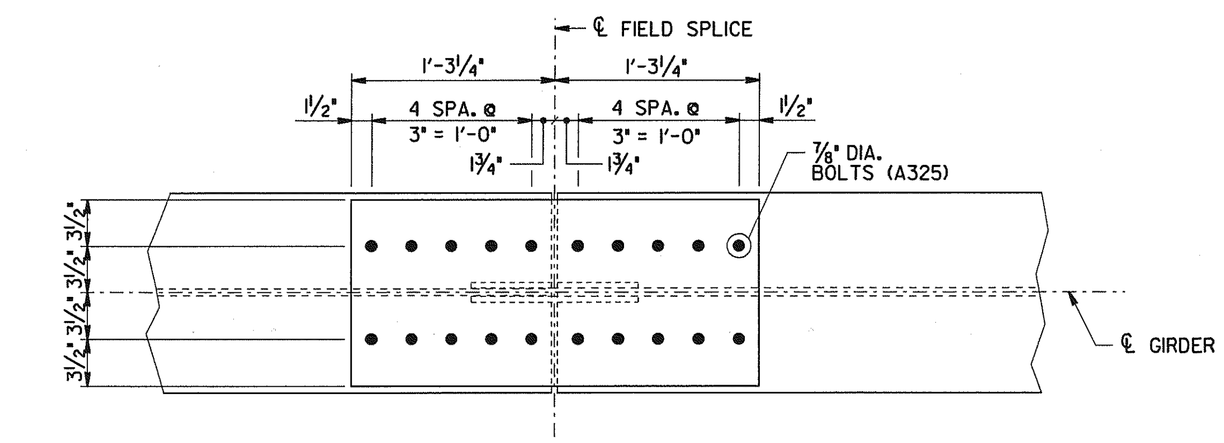

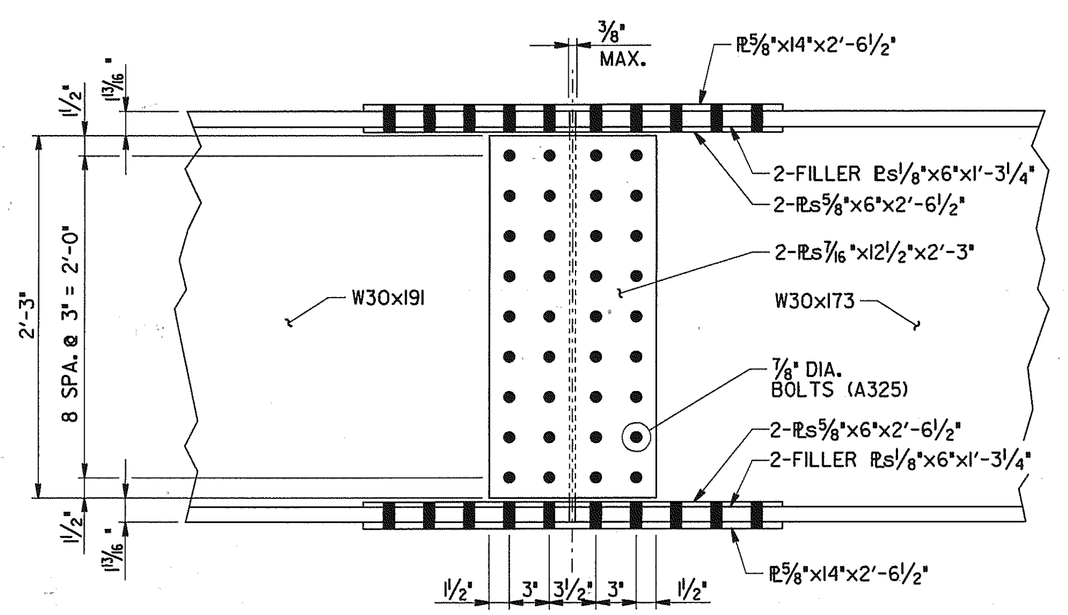

GIRDER ELEVATION

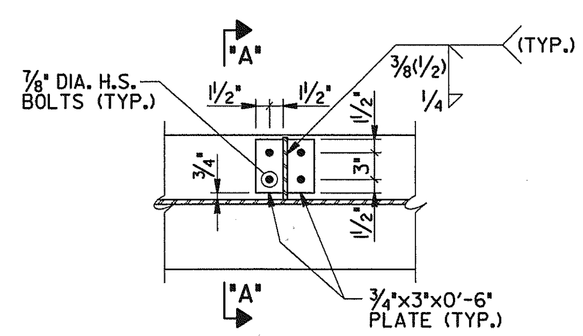

PLAN

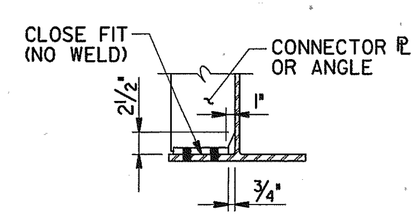

SECTION "A-A"

DETAIL "A"

(SHOWN AT NEW GIRDERS)

NOTE: THE FABRICATOR MAY SUBSTITUTE A SINGLE PLATE AT EITHER OR BOTH ENDS OF A STIFFENER. THE LOCATION OF BOLTS AND THE LENGTH PARALLEL TO THE STIFFENER SHALL NOT CHANGE. THE PLATE LENGTH TO THE WEB PLATE MUST BE 6" PLUS THE STIFFENER PLATE THICKNESS.

NOTE: BOLTS TO BE TORQUED TO AASHTO SPECIFICATION FOR FRICTION CONNECTION PRIOR TO TAB TO STIFFENER WELD.

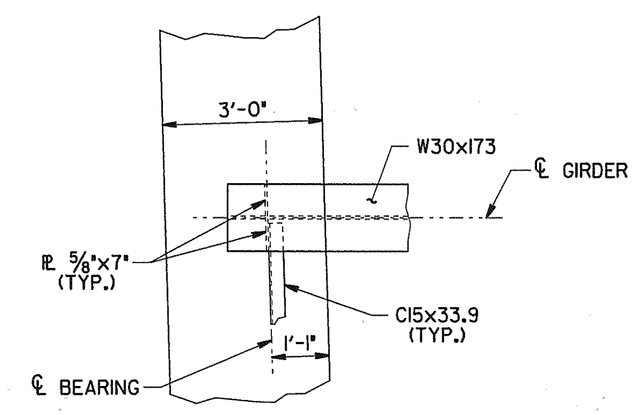

PLAN AT ABUTMENT NO. 1

(ABUTMENT NO. 2 SIMILAR)
(SHOWN AT NEW GIRDER)

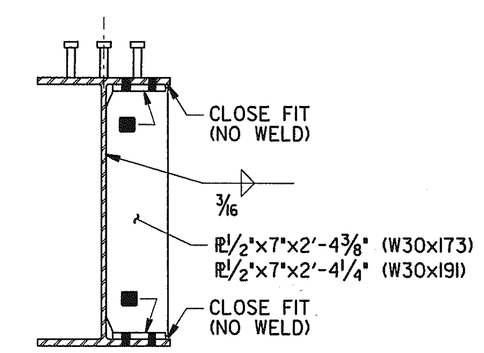

DIAPHRAGM CONNECTOR PLATE

(AT NEW GIRDERS)
■ DENOTES: SEE DETAIL "A"

STATE OF TENNESSEE
DEPARTMENT OF TRANSPORTATION

STRUCTURAL STEEL DETAILS
WIDENING OF INTERSTATE 40
OVER
CSX RAILROAD AND CLINTON STREET
STATION 116+75.34 (LOG MI. 16.75)
BRIDGE ID. NO. 19100400063 (RT. LN.)
DAVIDSON COUNTY
2002

DESIGNED BY	R. POTIER	DATE	12/01
DRAWN BY	CANNON	DATE	12/01
SUPERVISED BY	PETRONE	DATE	12/01
CHECKED BY	WILSON, PETRONE	DATE	12/01

M-427-55

twilson
twilson
bc0745
Plot Scale: 1.0000 inches per inch.
Plot Date: 12/14/2001 Time: 8:33:48 AM
B:\LOCAL\PILL\BRIDGE\24952_083348_83348ss2_twilson.prf

CONST NO. 19005-3153-44

PROJECT NO.	YEAR	SHEET NO.
IM-40-4(73)206	2002	

REVISIONS

NO.	DATE	BY	BRIEF DESCRIPTION

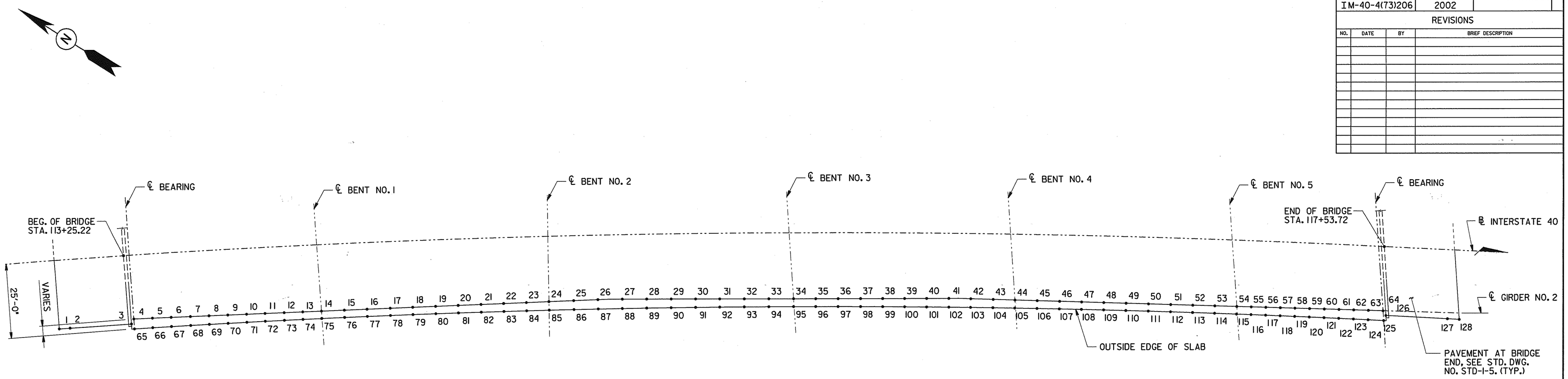

BRIDGE SCREED PLAN

TABLE OF STATIONS AND ELEVATIONS

POINT	STATION	ELEVATION	POINT	STATION	ELEVATION	POINT	STATION	ELEVATION	POINT	STATION	ELEVATION	POINT	STATION	ELEVATION	POINT	STATION	ELEVATION
1	113+01.22	464.94	24	114+69.59	467.11	47	116+51.17	466.06	70	113+59.51	465.96	93	115+36.17	467.03	116	117+09.26	464.92
2	113+05.44	465.03	25	114+77.92	467.14	48	116+58.75	465.94	71	113+65.94	466.05	94	115+44.48	467.00	117	117+14.27	464.81
3	113+26.50	465.45	26	114+86.24	467.17	49	116+66.33	465.82	72	113+72.37	466.15	95	115+52.82	466.97	118	117+19.29	464.70
4	113+27.38	465.52	27	114+94.56	467.18	50	116+73.92	465.69	73	113+78.80	466.23	96	115+60.38	466.93	119	117+24.30	464.59
5	113+33.81	465.64	28	115+02.88	467.18	51	116+81.50	465.55	74	113+85.23	466.32	97	115+67.94	466.88	120	117+29.32	464.48
6	113+40.23	465.75	29	115+11.20	467.18	52	116+89.08	465.41	75	113+91.66	466.40	98	115+75.50	466.83	121	117+34.33	464.36
7	113+46.66	465.85	30	115+19.52	467.17	53	116+96.66	465.26	76	113+99.45	466.49	99	115+83.06	466.77	122	117+39.35	464.24
8	113+53.08	465.95	31	115+27.86	467.15	54	117+04.24	465.11	77	114+07.24	466.57	100	115+90.63	466.71	123	117+44.36	464.11
9	113+59.51	466.05	32	115+36.17	467.12	55	117+09.26	465.01	78	114+15.04	466.65	101	115+98.19	466.64	124	117+49.37	463.99
10	113+65.94	466.14	33	115+44.48	467.09	56	117+14.27	464.90	79	114+22.83	466.72	102	116+05.75	466.56	125	117+54.39	463.86
11	113+72.37	466.23	34	115+52.82	467.05	57	117+19.29	464.79	80	114+30.63	466.78	103	116+13.31	466.48	126	117+55.47	463.89
12	113+78.80	466.32	35	115+60.38	467.01	58	117+24.30	464.68	81	114+38.42	466.84	104	116+20.87	466.39	127	117+76.63	463.31
13	113+85.23	466.40	36	115+67.94	466.97	59	117+29.32	464.57	82	114+46.21	466.89	105	116+28.43	466.30	128	117+80.66	463.19
14	113+91.66	466.48	37	115+75.50	466.92	60	117+34.33	464.45	83	114+54.01	466.94	106	116+36.01	466.20			
15	113+99.45	466.57	38	115+83.06	466.86	61	117+39.35	464.34	84	114+61.80	466.98	107	116+43.59	466.09			
16	114+07.24	466.65	39	115+90.63	466.80	62	117+44.36	464.21	85	114+69.59	467.01	108	116+51.17	465.98			
17	114+15.04	466.73	40	115+98.19	466.73	63	117+49.37	464.09	86	114+77.92	467.04	109	116+58.75	465.86			
18	114+22.83	466.80	41	116+05.75	466.66	64	117+54.39	463.97	87	114+86.24	467.06	110	116+66.33	465.74			
19	114+30.63	466.87	42	116+13.31	466.58	65	113+27.38	465.41	88	114+94.56	467.07	111	116+73.92	465.61			
20	114+38.42	466.93	43	116+20.87	466.48	66	113+33.81	465.53	89	115+02.88	467.08	112	116+81.50	465.47			
21	114+46.21	466.98	44	116+28.43	466.39	67	113+40.23	465.64	90	115+11.20	467.08	113	116+89.08	465.33			
22	114+54.01	467.03	45	116+36.01	466.29	68	113+46.66	465.75	91	115+19.52	467.07	114	116+96.66	465.18			
23	114+61.80	467.07	46	116+43.59	466.18	69	113+53.08	465.86	92	115+27.86	467.06	115	117+04.24	465.03			

WINFORD A. PETRONE
REGISTERED ENGINEER
AGRICULTURE
NO. 13,774
STATE OF TENNESSEE

STATE OF TENNESSEE
DEPARTMENT OF TRANSPORTATION

BRIDGE SCREED
WIDENING OF INTERSTATE 40
OVER
CSX RAILROAD AND CLINTON STREET
STATION 116+75.34 (LOG MI. 16.75)
BRIDGE ID. NO. 19I00400063 (RT. LN.)
DAVIDSON COUNTY
2002

M-427-56

DESIGNED BY R. POTIER DATE 12/01
DRAWN BY t. wilson DATE 12/01
SUPERVISED BY PETRONE DATE 12/01
CHECKED BY WILSON, PETRONE DATE 12/01

twilson
12/10/01
1:50:01
Plot to scale 1 copies
D:\LOCAL\FILL\BOND\24952.583848.83848scr.twilson.prf

CONST NO. 19005-3153-44

PROJECT NO.	YEAR	SHEET NO.
IM-40-4(73)206	2002	

REVISIONS

NO.	DATE	BY	BRIEF DESCRIPTION
1	1-10-02	W.A.P.	ADDED RISER BLOCK PLAN VIEW

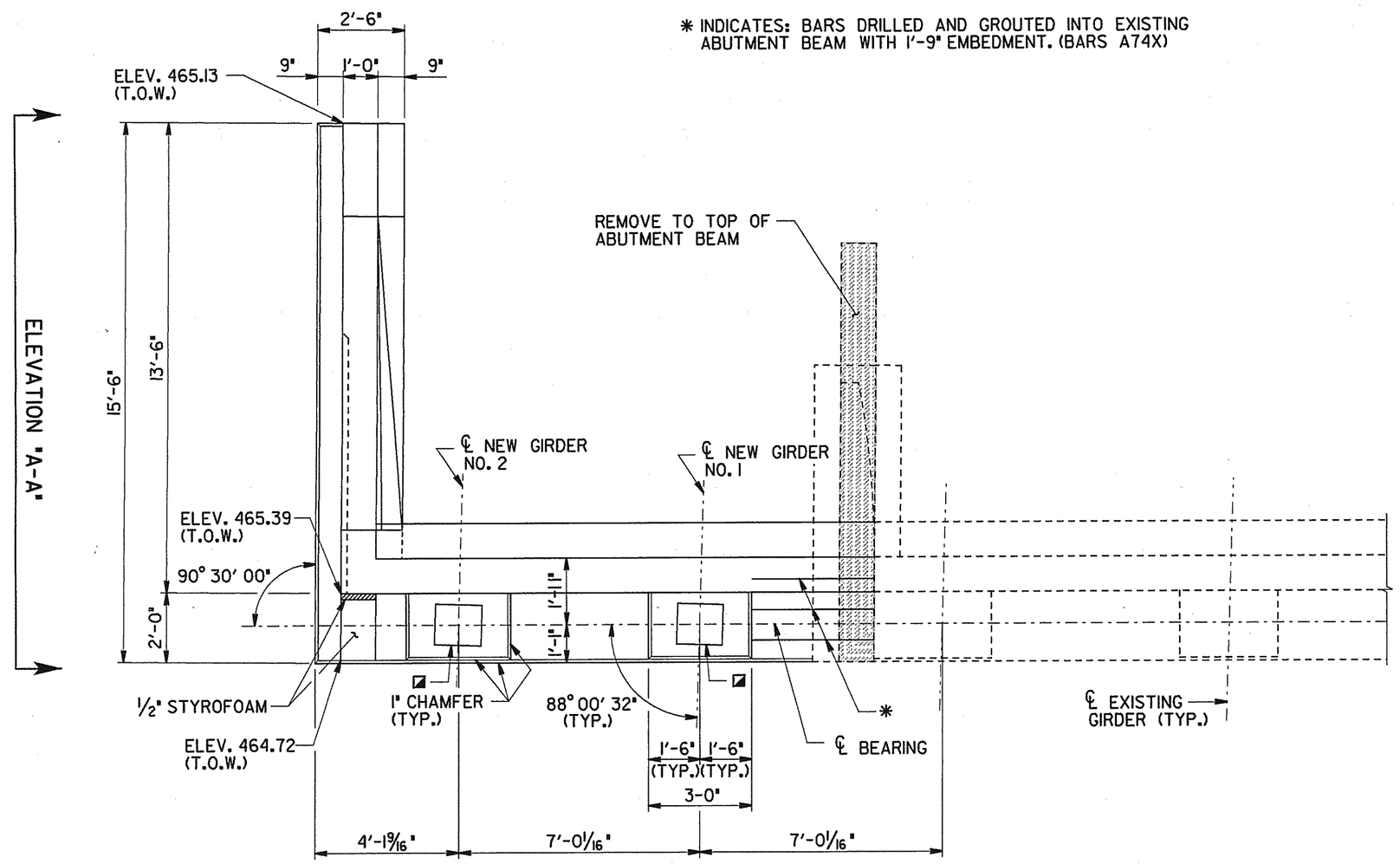

✱ INDICATES: BARS DRILLED AND GROUTED INTO EXISTING ABUTMENT BEAM WITH 1'-9" EMBEDMENT. (BARS A74X)

PLAN

◪ INDICATES: 1/4" RECESS FOR 4 3/8"x14"x1'-4" LAMINATED ELASTOMERIC BEARING PAD (TYP.).

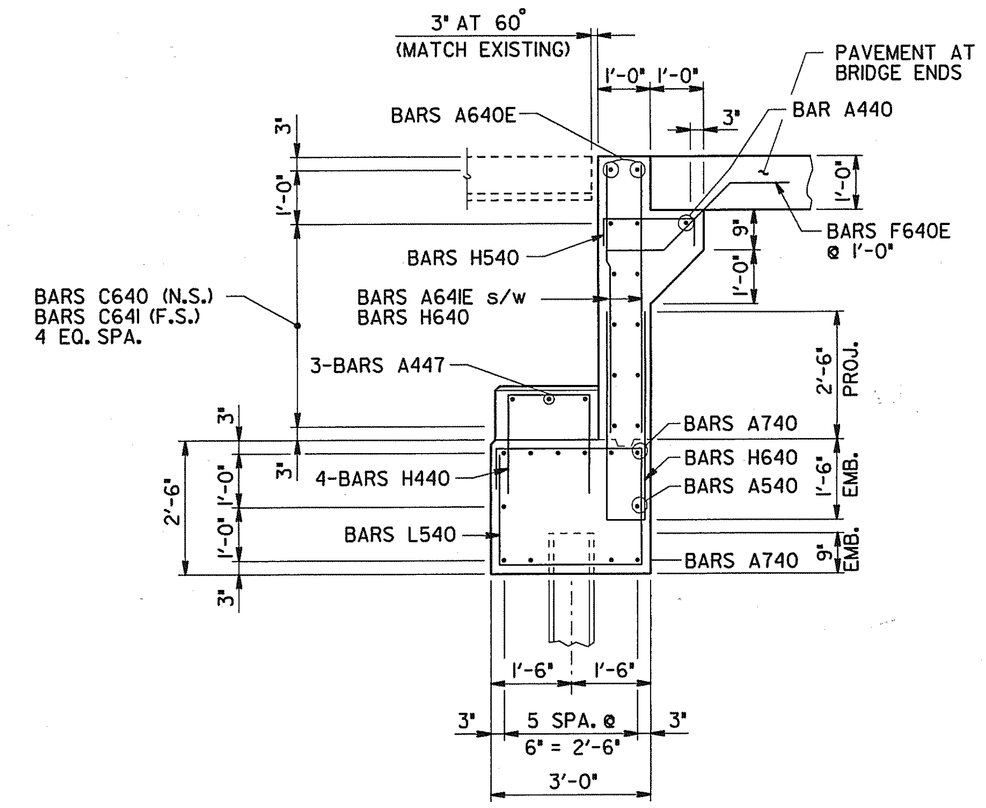

SECTION "B-B"

NOTES:

1. E - INDICATES BARS TO BE EPOXY COATED.
   N.S. - INDICATES NEAR SIDE
   F.S. - INDICATES FAR SIDE
   E.F. - INDICATES EACH FACE
2. WHEN POURING THE WINGWALLS, PROVISIONS SHALL BE MADE FOR SETTING REINFORCING STEEL FOR THE WINGPOSTS AND PARAPETS. FOR DETAILS OF WINGPOSTS AND PARAPETS SEE STANDARD DWG. STD-1-1.
3. RISER BLOCKS TO BE POURED MONOLITHCALLY WITH ABUTMENT BEAM.
4. BRIDGE SEAT ELEVATIONS ARE GIVEN AT THE INTERSECTION OF ℄ GIRDER AND ℄ BEARING.
5. ELASTOMERIC PADS SHALL BE IN PLACE A MINIMUM OF ONE DAY BEFORE BEING DISTURBED BY SETTING BEAMS. PLACE RUBBER BONDING CEMENT IN SUCH A WAY THAT VISIBLE CONCRETE SURFACES WILL NOT BE STAINED.
6. FOR DRAINAGE DETAILS, SEE STD. DWG. NO. STD-10-1.
7. SEE STD. DWG. STD-6-1 FOR PILE DETAILS AND NOTES.
8. COST OF BRIDGE RAIL AND POST IS TO BE INCLUDED IN THE UNIT PRICE BID FOR THE BRIDGE RAIL SYSTEM.
9. OUTSIDE EDGE OF SLAB AND BRIDGE RAIL TO CONFORM TO HORIZONTAL CURVE.
10. RISER BLOCK BEARING PAD SURFACES TO CONFORM TO BOTTOM OF BEAM GRADE.
11. DASH LINES INDICATE EXISTING ABUTMENT.

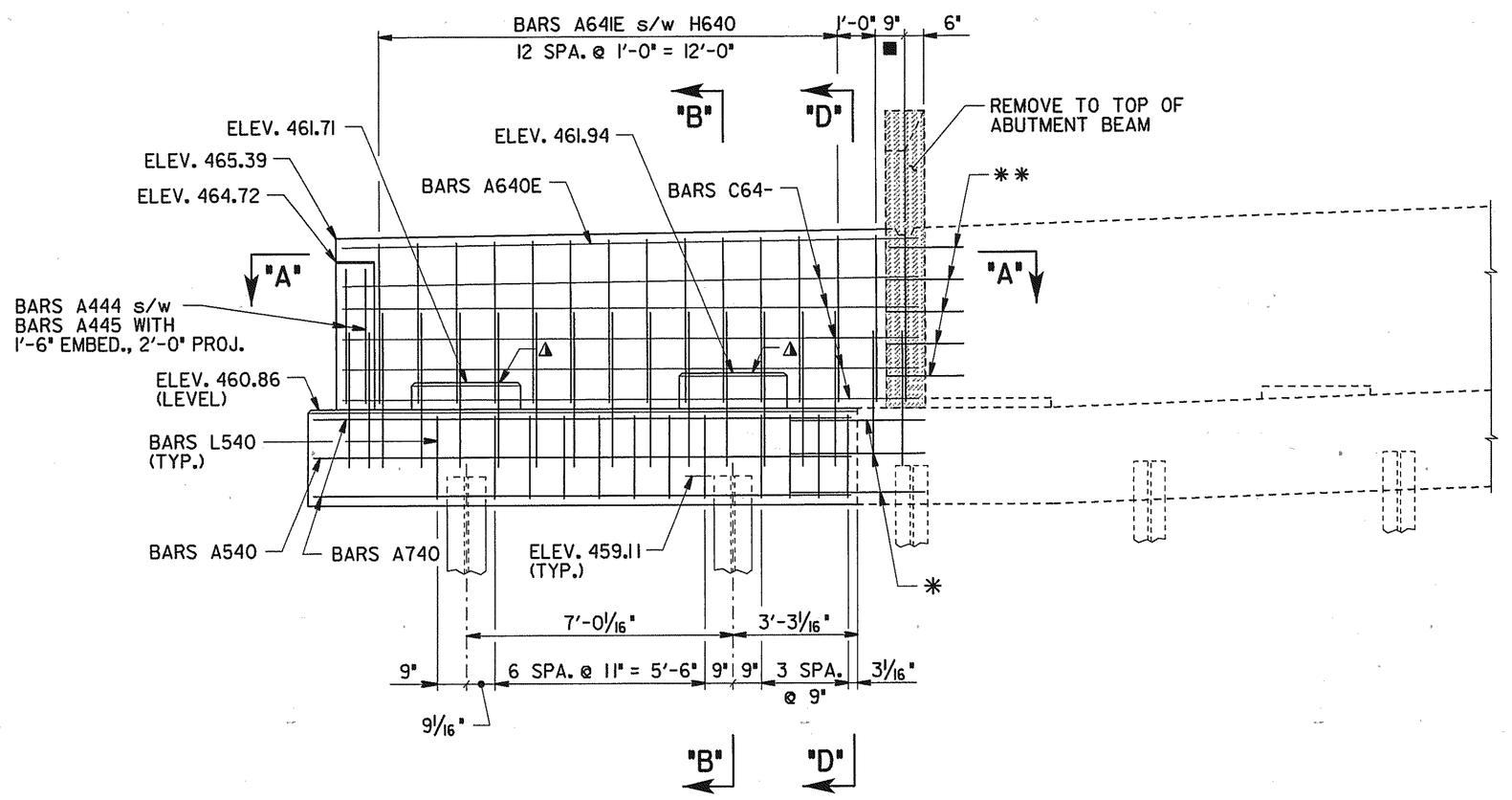

ELEVATION

(LOOKING BACK ON SURVEY)

▲ INDICATES: RISER BLOCK TO BE REINFORCED, SEE SECTION "B-B".

✱✱ INDICATES: BARS A542 @ 1'-0" MAX. DRILLED AND GROUTED INTO EXISTING ENDWALL WITH 1'-0" EMBEDMENT.

■ INDICATES: BARS A641E s/w BARS A643 (DRILL AND GROUT) WITH 1'-6" EMBED., 2'-0" PROJ.

✱ INDICATES: BARS DRILLED AND GROUTED INTO EXISTING ABUTMENT BEAM WITH 1'-9" EMBEDMENT. (BARS A742)

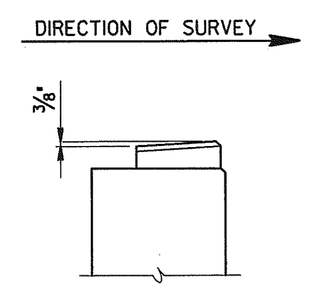

RISER BLOCK SLOPE DETAILS

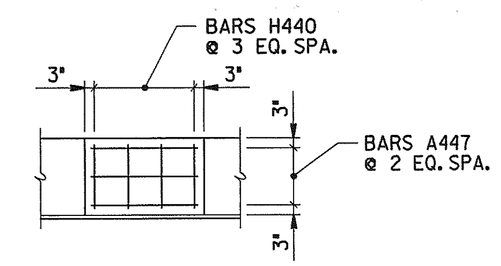

TYPICAL PLAN OF RISER BLOCK ⚠1

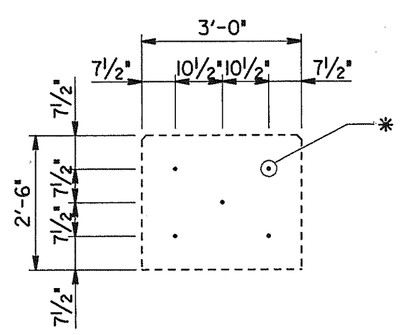

SECTION "D-D"

✱ INDICATES BARS DRILLED AND GROUTED INTO EXISTING CAP BEAM WITH 1'-9" EMBEDMENT. (BARS A742)

ESTIMATED QUANTITIES

CLASS "A" CONCRETE (BRIDGES) C.Y.	REINFORCING STEEL LBS.	EPOXY COATED REINFORCING STEEL LBS.
14	1,988	384

WINFORD A. PETRONE
REGISTERED ENGINEER
01/15/02
NO. 13,774
STATE OF TENNESSEE

STATE OF TENNESSEE
DEPARTMENT OF TRANSPORTATION

ABUTMENT NO. 1
WIDENING OF INTERSTATE 40
OVER
CSX RAILROAD AND CLINTON STREET
STATION 116+75.34 (LOG MI. 16.75)
BRIDGE ID. NO. 19I00400063 (RT. LN.)
DAVIDSON COUNTY
2002

M-427-57

DESIGNED BY	R. POTIER	DATE	12/01
DRAWN BY	LITTRELL, WILSON	DATE	12/01
SUPERVISED BY	PETRONE	DATE	12/01
CHECKED BY	WILSON, PETRONE	DATE	12/01

TWilson
1/10/02
09005-49
Abutment Details 1
D:\LOCAL\FILL\BOND\2170.583848.83848ab1.TWilson.prf

CONST NO. 19005-3153-44

PROJECT NO.	YEAR	SHEET NO.
IM-40-4(73)206	2002	

REVISIONS

NO.	DATE	BY	BRIEF DESCRIPTION

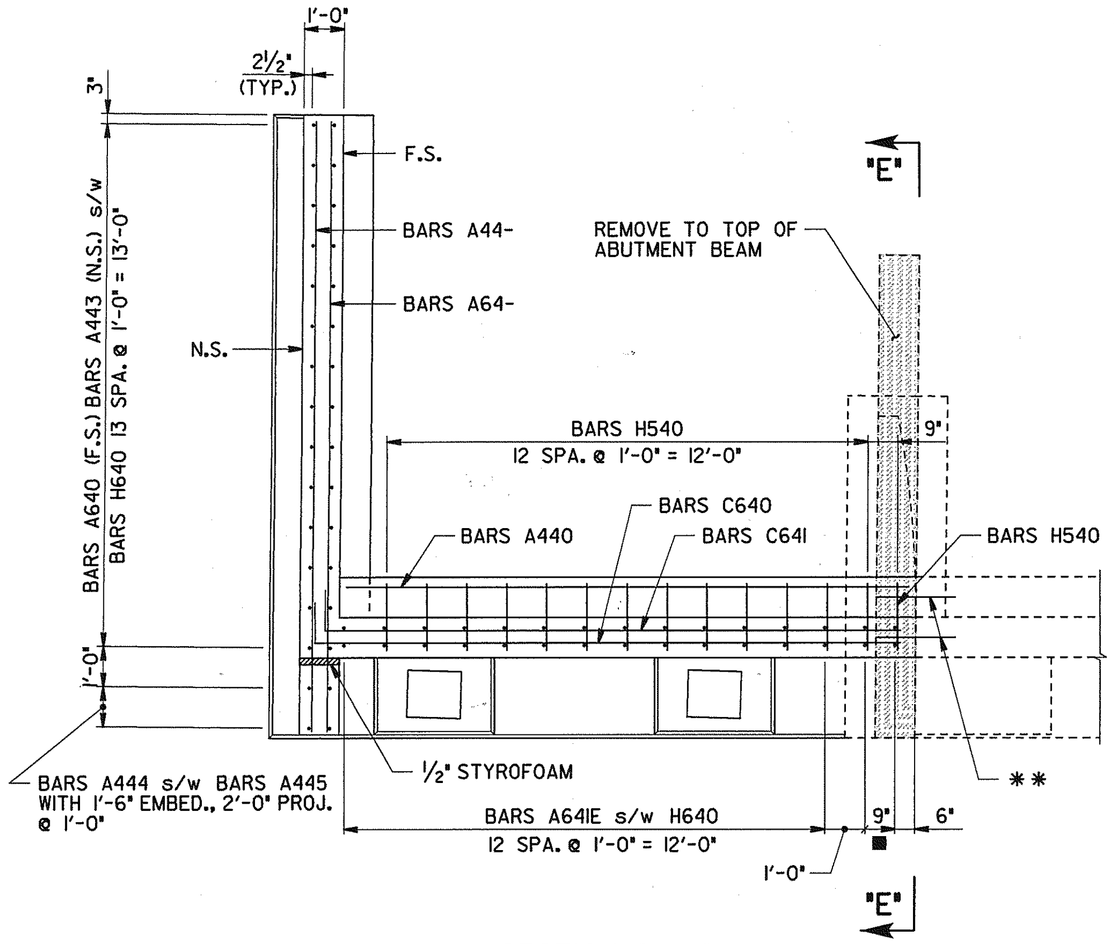

SECTION "A-A"

■ DENOTES: BARS A641E s/w BARS A643 (DRILL AND GROUT) WITH 1'-6" EMBED., 2'-0" PROJ.

** INDICATES: BARS A542 @ 1'-0" MAX. DRILLED AND GROUTED INTO EXISTING ENDWALL WITH 1'-0" EMBEDMENT.

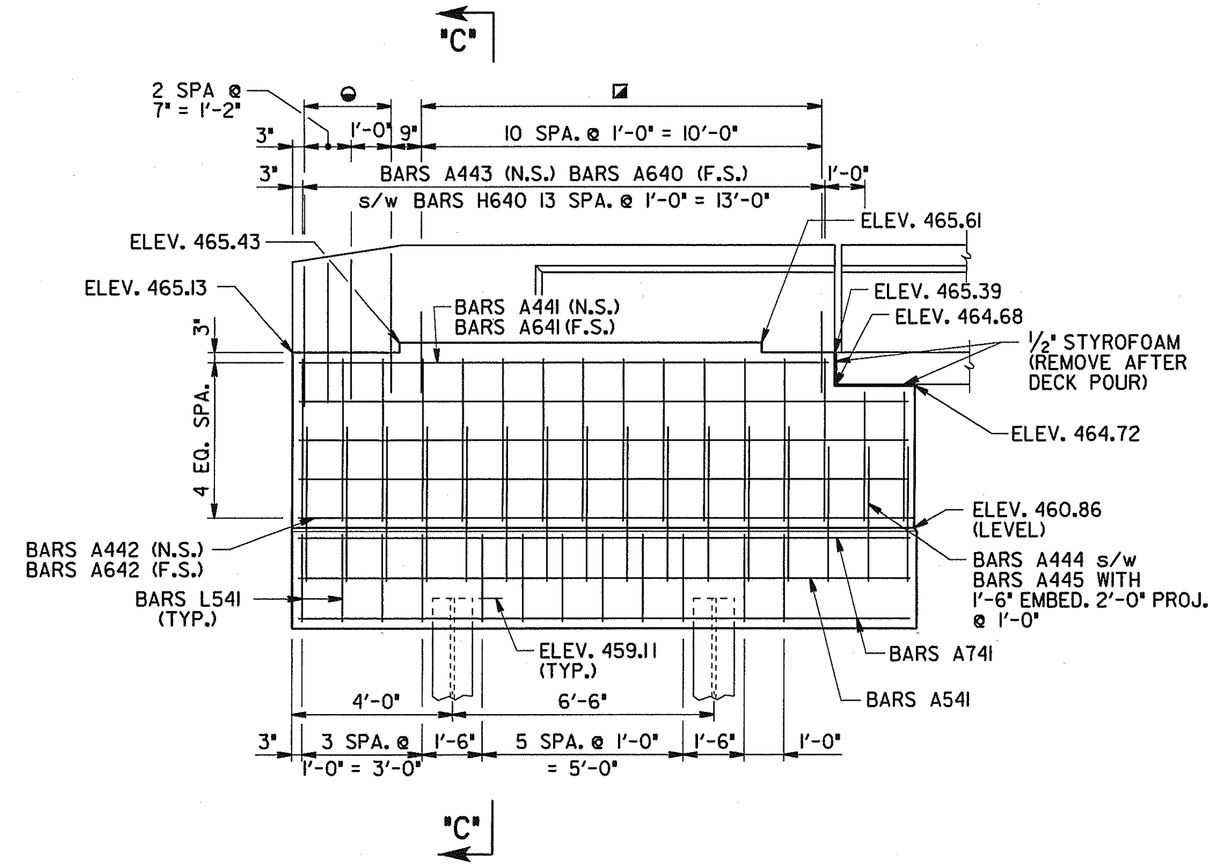

ELEVATION "A-A"

◒ DENOTES: BARS A470E (E.F.)

◪ DENOTES: BARS B470E (E.F.)

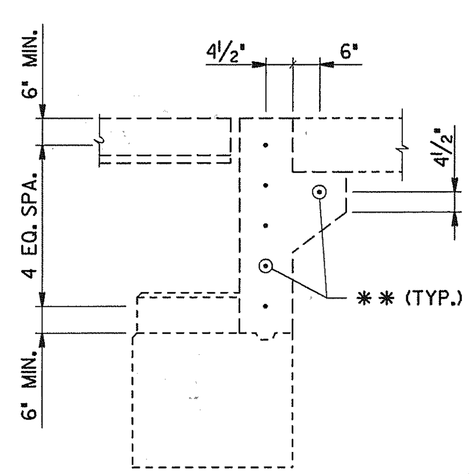

SECTION "E-E"

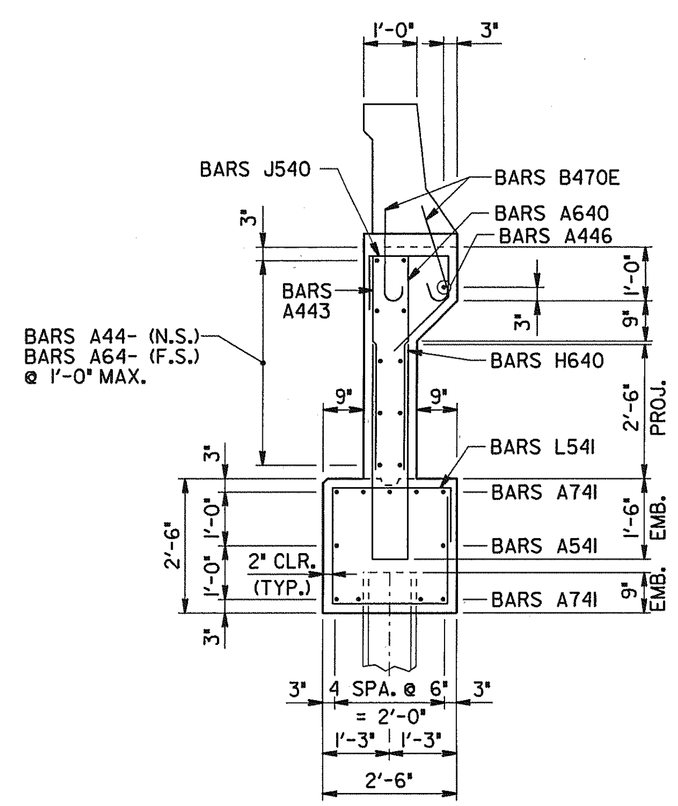

SECTION "C-C"

STATE OF TENNESSEE
DEPARTMENT OF TRANSPORTATION

ABUTMENT NO. 1 DETAILS
WIDENING OF INTERSTATE 40
OVER
CSX RAILROAD AND CLINTON STREET
STATION 116+75.34 (LOG MI. 16.75)
BRIDGE ID. NO. 19100400063 (RT. LN.)
DAVIDSON COUNTY
2002

M-427-58

DESIGNED BY R. POTIER DATE 12/01
DRAWN BY T. WILSON DATE 12/01
SUPERVISED BY PETRONE DATE 12/01
CHECKED BY WILSON, PETRONE DATE 12/01

twilson
12/01/01
1:50:42
PM
D:\LOCAL\FULL\BDND\24954.583848.833848di_twilson.prf

CONST NO. 19005-3153-44

PROJECT NO.	YEAR	SHEET NO.
IM-40-4(73)206	2002	

REVISIONS

NO.	DATE	BY	BRIEF DESCRIPTION
1	1-10-02	W.A.P.	ADDED RISER BLOCK PLAN VIEW

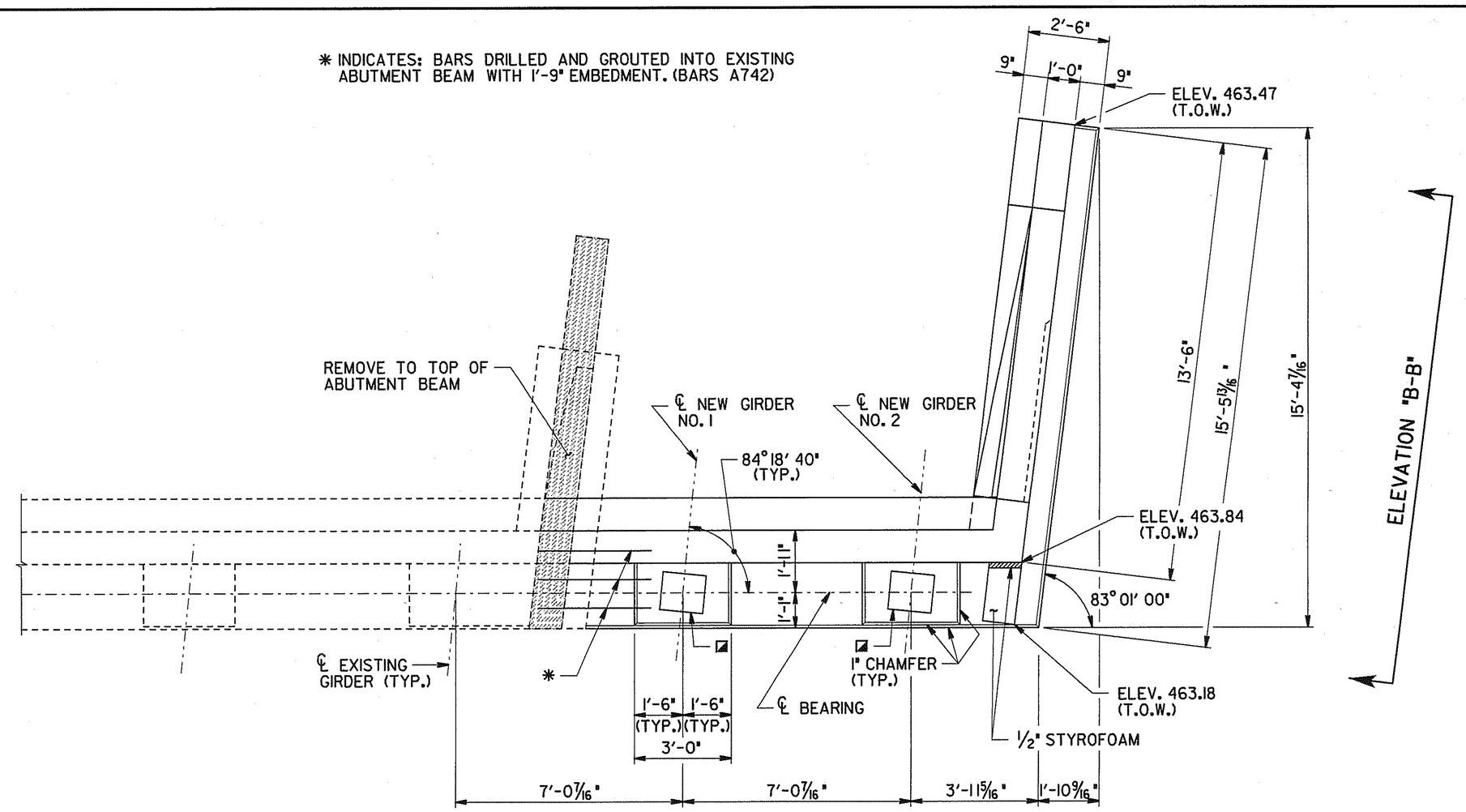

ELEVATION "B-B"

PLAN

◪ INDICATES: 1/4" RECESS FOR 4 3/8"x14"x1'-4" LAMINATED ELASTOMERIC BEARING PAD (TYP.).

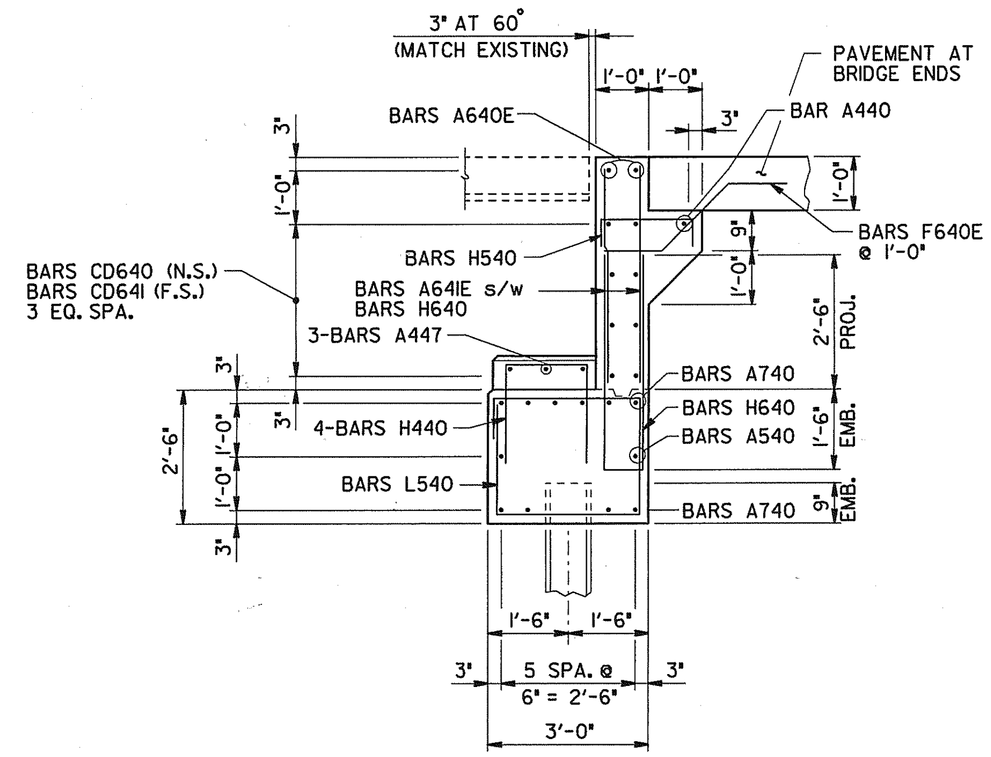

SECTION "B-B"

NOTES:

1. E - INDICATES BARS TO BE EPOXY COATED.
   N.S. - INDICATES NEAR SIDE
   F.S. - INDICATES FAR SIDE
   E.F. - INDICATES EACH FACE
2. WHEN POURING THE WINGWALLS, PROVISIONS SHALL BE MADE FOR SETTING REINFORCING STEEL FOR THE WINGPOSTS AND PARAPETS. FOR DETAILS OF WINGPOSTS AND PARAPETS SEE STANDARD DWG. STD-1-1.
3. RISER BLOCKS TO BE POURED MONOLITHCALLY WITH ABUTMENT BEAM.
4. BRIDGE SEAT ELEVATIONS ARE GIVEN AT THE INTERSECTION OF ℄ GIRDER AND ℄ BEARING.
5. ELASTOMERIC PADS SHALL BE IN PLACE A MINIMUM OF ONE DAY BEFORE BEING DISTURBED BY SETTING BEAMS. PLACE RUBBER BONDING CEMENT IN SUCH A WAY THAT VISIBLE CONCRETE SURFACES WILL NOT BE STAINED.
6. FOR DRAINAGE DETAILS, SEE STD. DWG. NO. STD-10-1.
7. SEE STD. DWG. STD-6-1 FOR PILE DETAILS AND NOTES.
8. COST OF BRIDGE RAIL AND POST IS TO BE INCLUDED IN THE UNIT PRICE BID FOR THE BRIDGE RAIL SYSTEM.
9. OUTSIDE EDGE OF SLAB AND BRIDGE RAIL TO CONFORM TO HORIZONTAL CURVE.
10. RISER BLOCK BEARING PAD SURFACES TO CONFORM TO BOTTOM OF BEAM GRADE.
11. DASH LINES INDICATE EXISTING ABUTMENT.

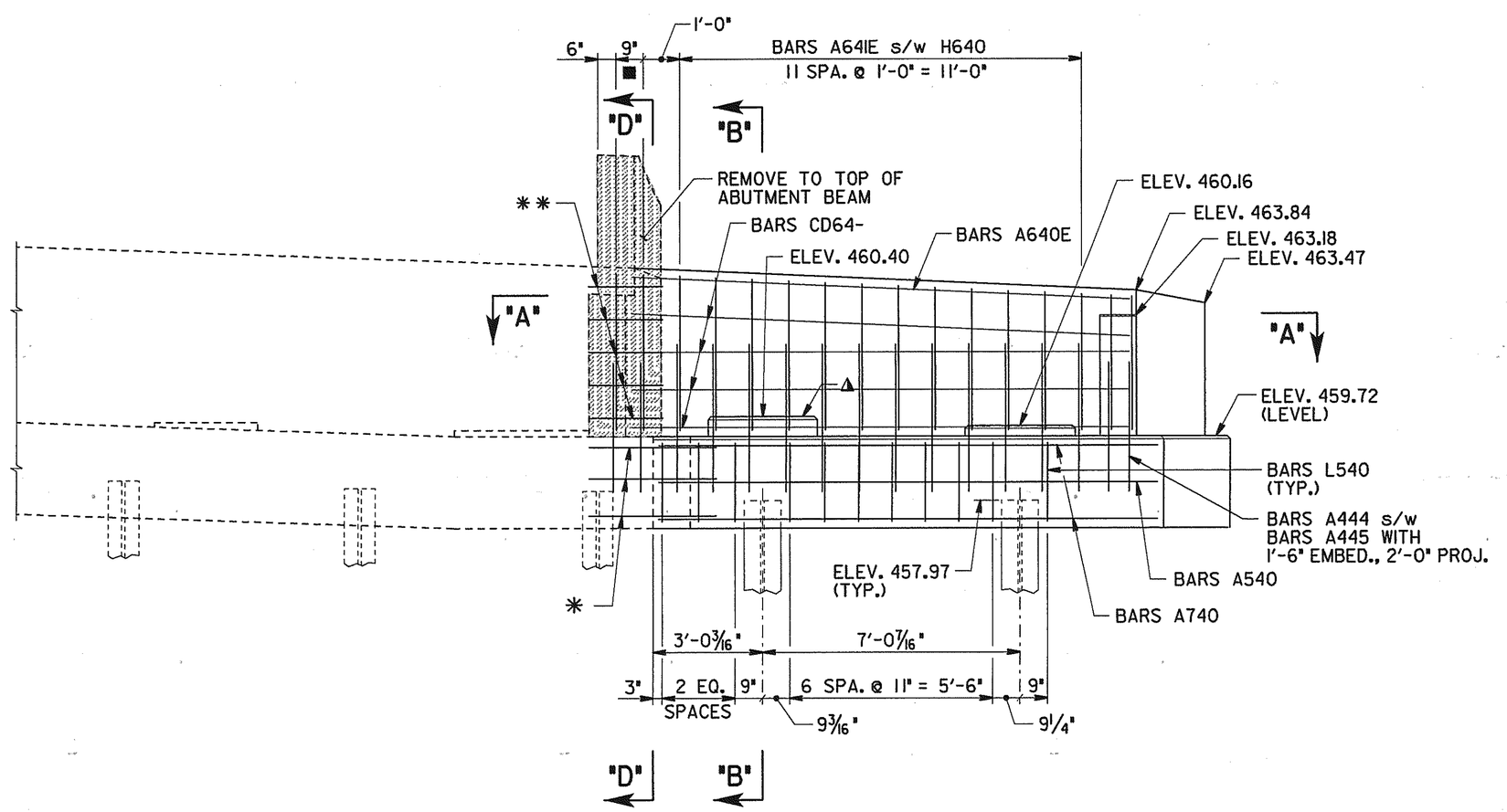

ELEVATION

(LOOKING FORWARD ON SURVEY)

▲ INDICATES: RISER BLOCK TO BE REINFORCED, SEE SECTION "B-B".

** INDICATES: BARS A542 @ 1'-0" MAX. DRILLED AND GROUTED INTO EXISTING ENDWALL WITH 1'-0" EMBEDMENT.

■ INDICATES: BARS A641E s/w BARS A643 (DRILL AND GROUT) WITH 1'-6" EMBED., 2'-0" PROJ.

* INDICATES: BARS DRILLED AND GROUTED INTO EXISTING ABUTMENT BEAM WITH 1'-9" EMBEDMENT. (BARS A742)

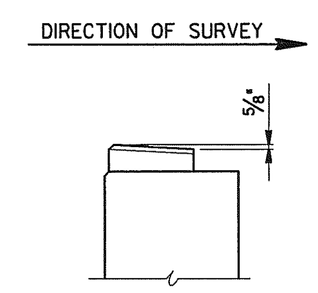

RISER BLOCK SLOPE DETAILS

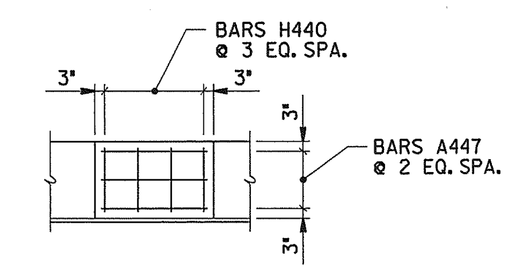

TYPICAL PLAN OF RISER BLOCK ⚠1

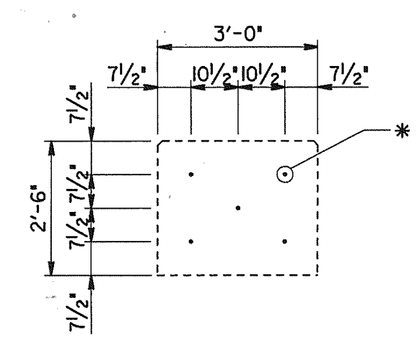

SECTION "D-D"

* INDICATES BARS DRILLED AND GROUTED INTO EXISTING CAP BEAM WITH 1'-9" EMBEDMENT. (BARS A742)

ESTIMATED QUANTITIES

CLASS "A" CONCRETE (BRIDGES) C.Y.	REINFORCING STEEL LBS.	EPOXY COATED REINFORCING STEEL LBS.
13	1,914	349

STATE OF TENNESSEE
DEPARTMENT OF TRANSPORTATION

ABUTMENT NO. 2
WIDENING OF INTERSTATE 40
OVER
CSX RAILROAD AND CLINTON STREET
STATION 116+75.34 (LOG MI. 16.75)
BRIDGE ID. NO. 19I00400063 (RT. LN.)
DAVIDSON COUNTY
2002

M-427-59

DESIGNED BY	R. POTIER	DATE	12/01
DRAWN BY	LITTRELL, WILSON	DATE	12/01
SUPERVISED BY	PETRONE	DATE	12/01
CHECKED BY	WILSON, PETRONE	DATE	12/01

TWilson
1/15/02
09:57 am
Proj: copies
D:\LOCALFILE\BUNDLE170.5838948.5838948bb2_TWilson.prf

CONST NO. 19005-3153-44

PROJECT NO.	YEAR	SHEET NO.
IM-40-4(73)206	2002	

REVISIONS

NO.	DATE	BY	BRIEF DESCRIPTION

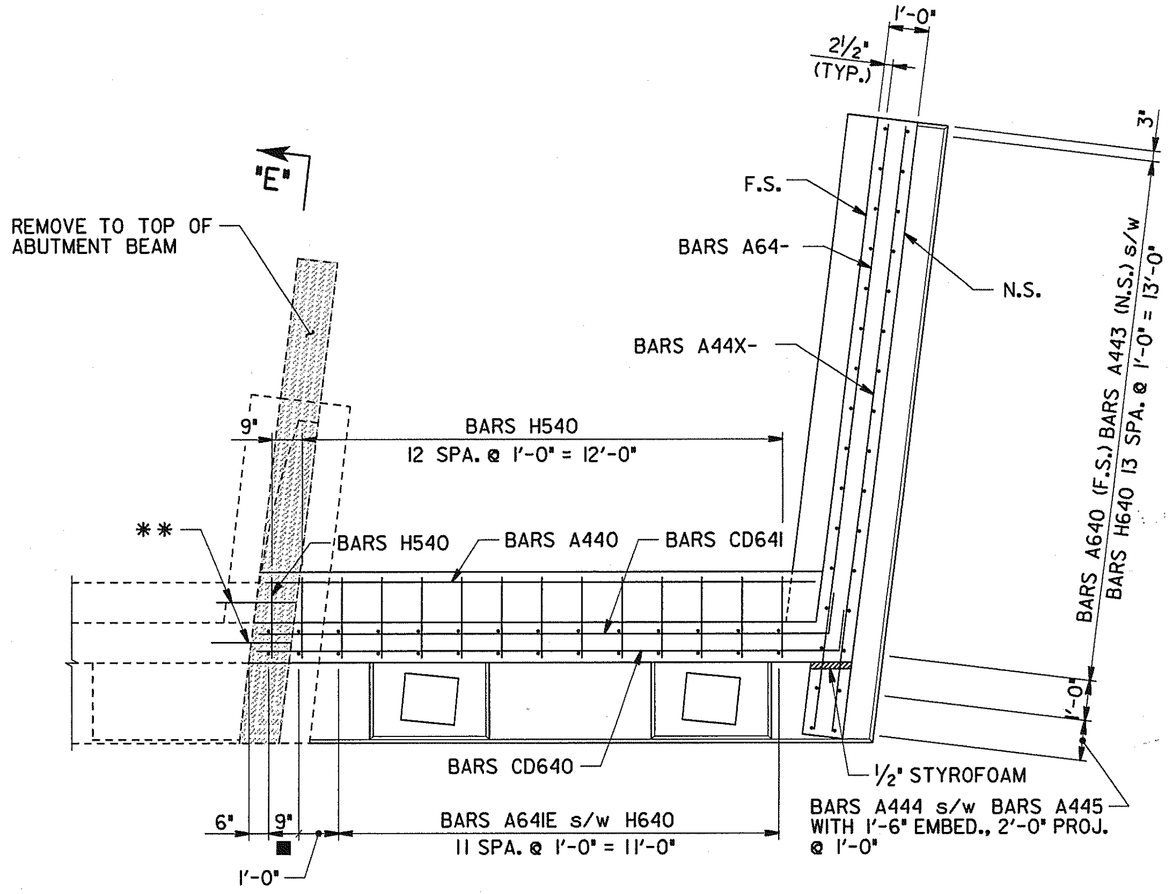

SECTION "A-A"

■ DENOTES: BARS A641E s/w BARS A643 (DRILL AND GROUT) WITH 1'-6" EMBED., 2'-0" PROJ.

** INDICATES: BARS A542 @ 1'-0" MAX. DRILLED AND GROUTED INTO EXISTING ENDWALL WITH 1'-0" EMBEDMENT.

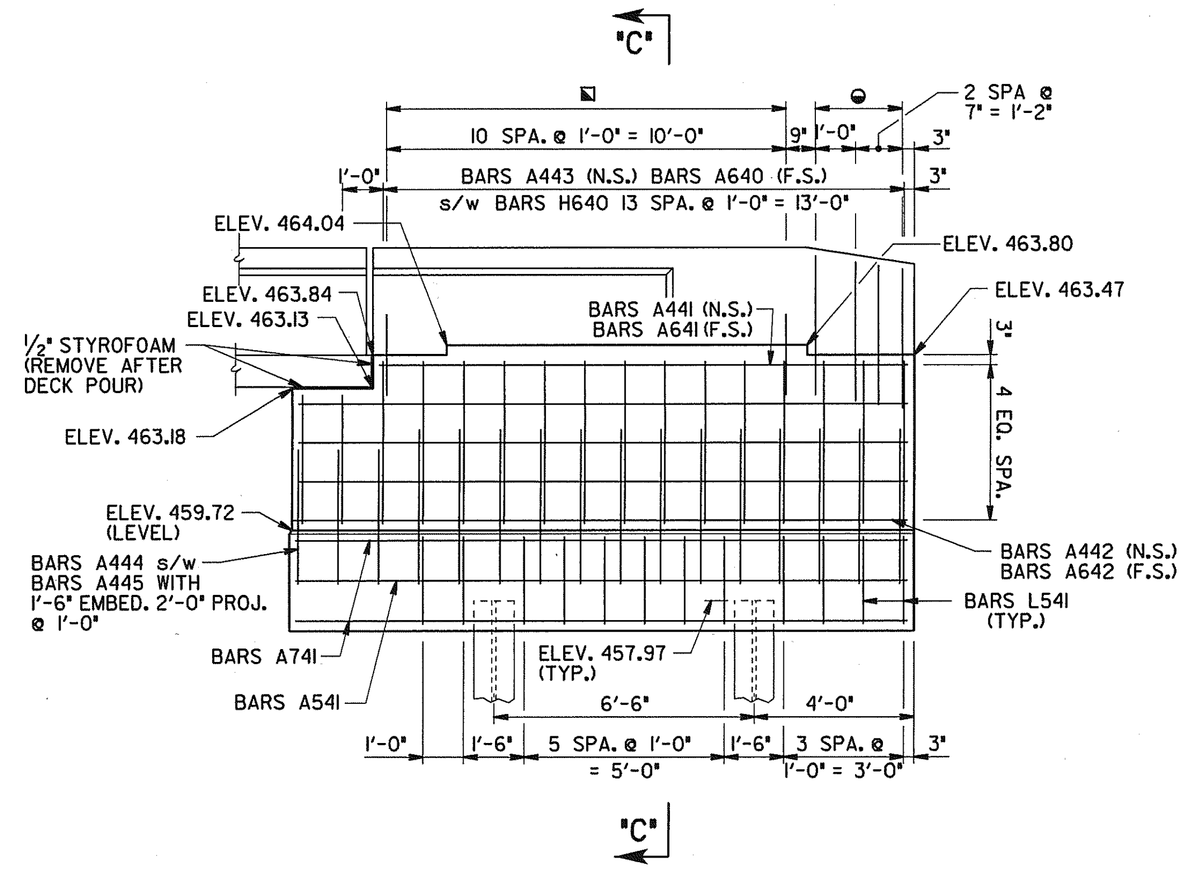

ELEVATION "B-B"

◒ DENOTES: BARS A470E (E.F.)

◪ DENOTES: BARS B470E (E.F.)

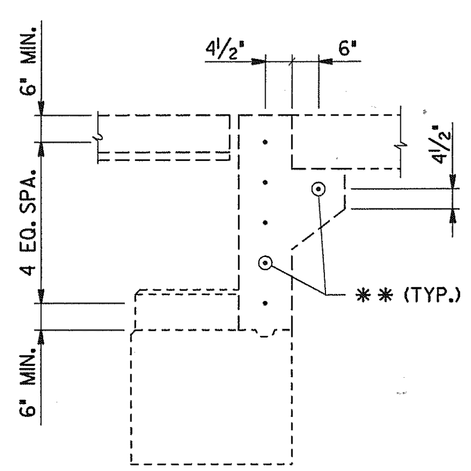

SECTION "E-E"

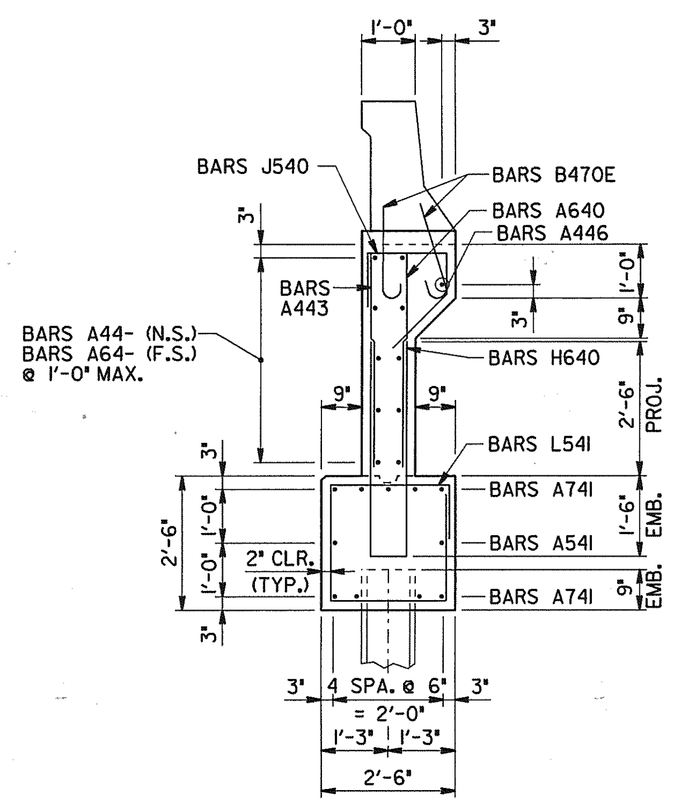

SECTION "C-C"

STATE OF TENNESSEE
DEPARTMENT OF TRANSPORTATION

ABUTMENT NO. 2 DETAILS
WIDENING OF INTERSTATE 40
OVER
CSX RAILROAD AND CLINTON STREET
STATION 116+75.34 (LOG MI. 16.75)
BRIDGE ID. NO. 19I00400063 (RT. LN.)
DAVIDSON COUNTY
2002

M-427-60

DESIGNED BY	R. POTIER	DATE	12/01
DRAWN BY	t. wilson	DATE	12/01
SUPERVISED BY	PETRONE	DATE	12/01
CHECKED BY	WILSON, PETRONE	DATE	12/01

twilson
12/04/01
10:04:28
Pw:\\pw.tdot.tn.gov\pw\tdot\Bridge Design\Projects\19005-3153-44\Sheets\M-427-60.dgn
DN:\LOCALVULL\BRDV\24952.583848.83848ed2.twilson.prf

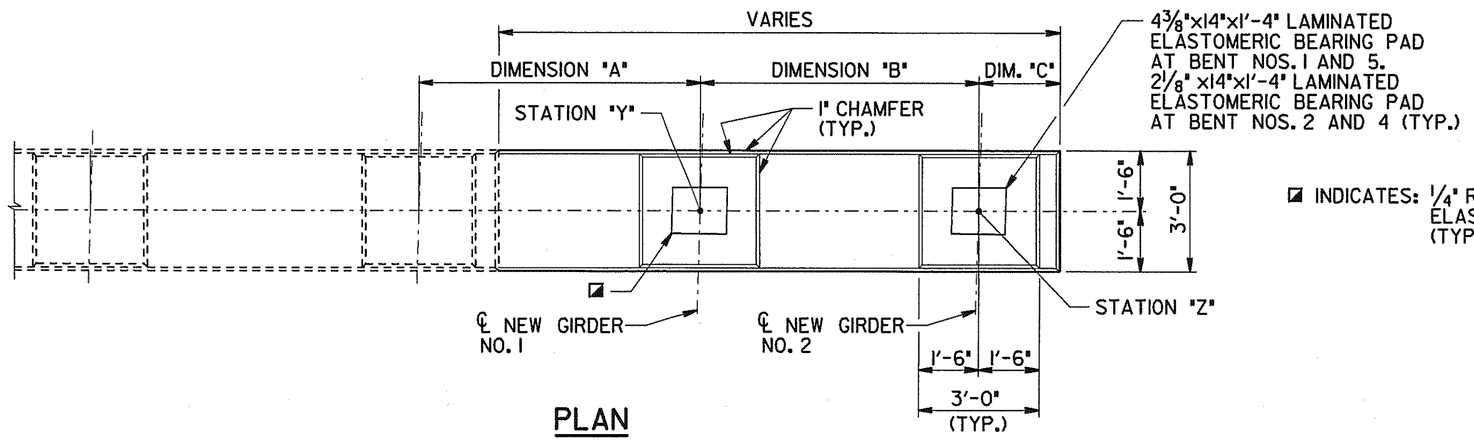

INDICATES: ¼" RECESS FOR LAMINATED ELASTOMERIC BEARING PAD. (TYP.).

PLAN

TABLE OF DIMENSIONS

ITEM	DIMENSION "A"	DIMENSION "B"	DIMENSION "C"	DIMENSION "D"	DIMENSION "E"
BENT NO. 1	7'-0 0/16"	7'-0 0/16"	1'-11 15/16"	3'-1 1/8"	15'-4 1/8"
BENT NO. 2	7'-0"	7'-0"	2'-0"	3'-0"	15'-3"
BENT NO. 4	7'-0 7/16"	7'-0 7/16"	1'-11 9/16"	3'-0 11/16"	15'-3 11/16"
BENT NO. 5	7'-0 7/16"	7'-0 7/16"	1'-11 9/16"	3'-0 11/16"	15'-3 11/16"

CONST NO. 19005-3153-44

PROJECT NO.	YEAR	SHEET NO.
IM-40-4(73)206	2002	

REVISIONS

NO.	DATE	BY	BRIEF DESCRIPTION
1	1-10-02	W.A.P.	ADDED RISER BLOCK PLAN VIEW AND REVISED SECTION "A-A"

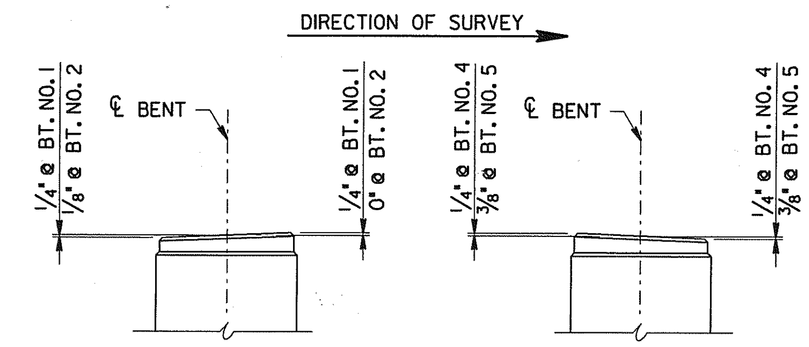

RISER BLOCK SLOPE DETAIL

NOTE: RISER BLOCKS TO BE POURED MONOLITHICALLY WITH CAP BEAM.

NOTE: COLUMN STEEL TO EXTEND 2'-7" INTO CAP BEAM.

NOTE: ELEVATIONS GIVEN AT ℄ BENT AND ℄ GIRDER.

NOTE: ELASTOMERIC PADS SHALL BE IN PLACE A MINIMUM OF ONE DAY BEFORE BEING DISTURBED BY SETTING BEAMS. PLACE RUBBER BONDING CEMENT IN SUCH A WAY THAT VISIBLE CONCRETE SURFACES WILL NOT BE STAINED.

NOTE: RISER BLOCK BEARING SURFACE TO CONFORM TO BOTTOM OF BEAM GRADE.

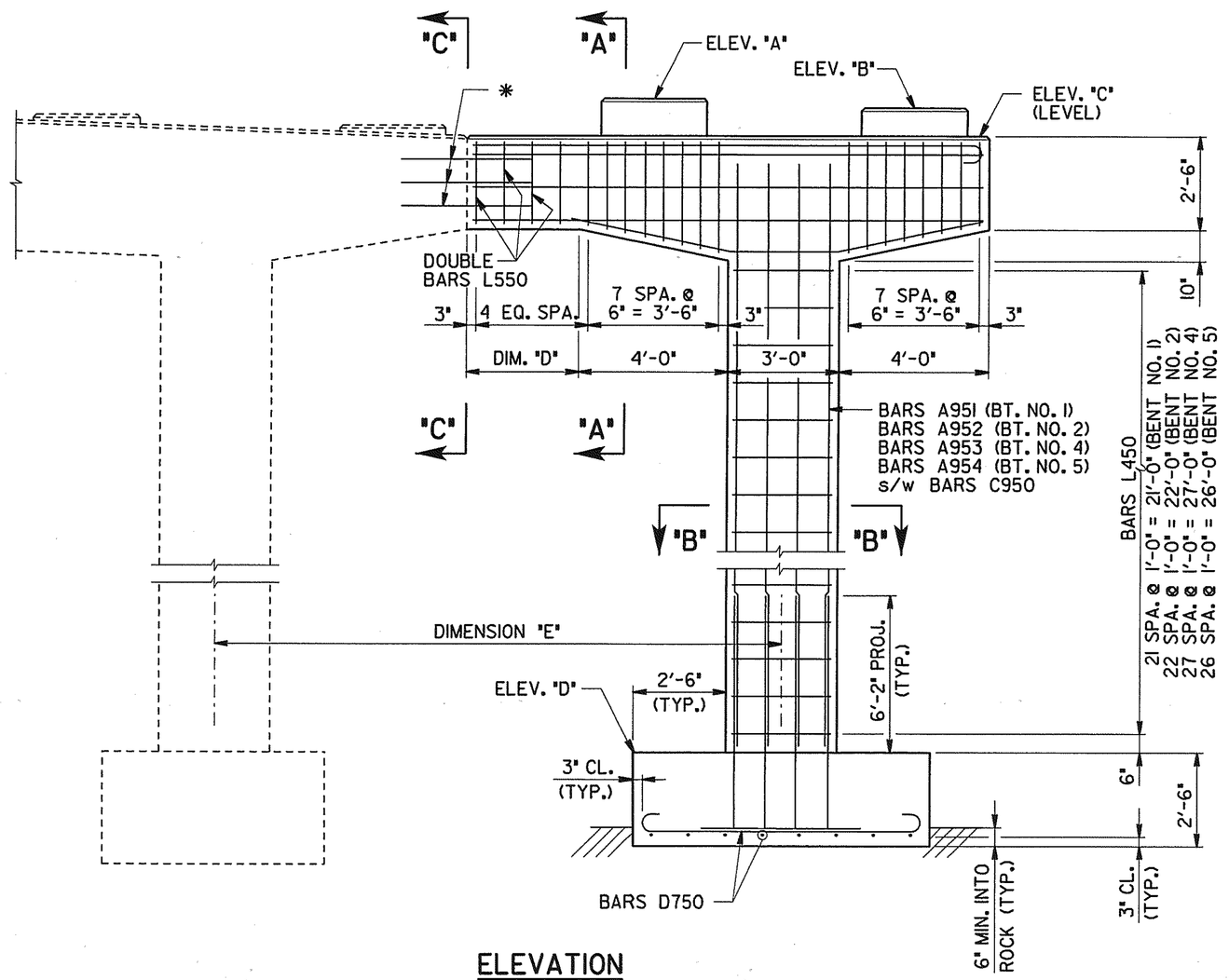

ELEVATION

(LOOKING FORWARD ON SURVEY)

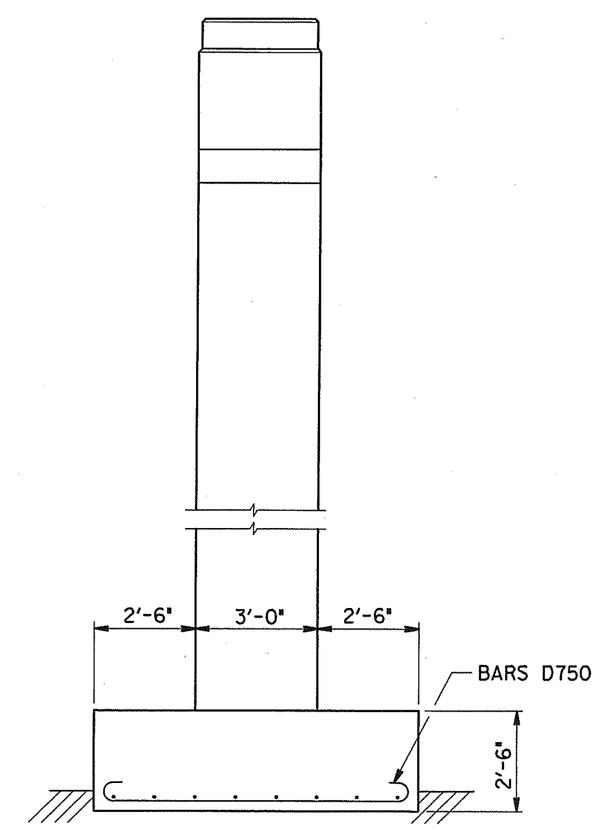

END ELEVATION

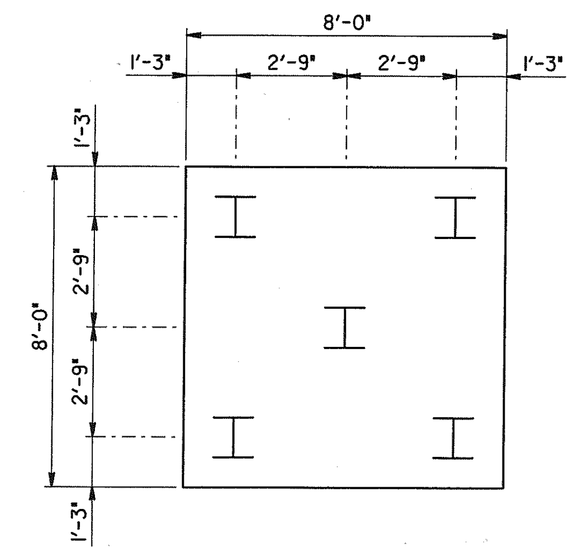

ALTERNATE PLAN OF FOOTING

(SHOWING PILE ARRANGEMENT)
(HP12x53 PILES)

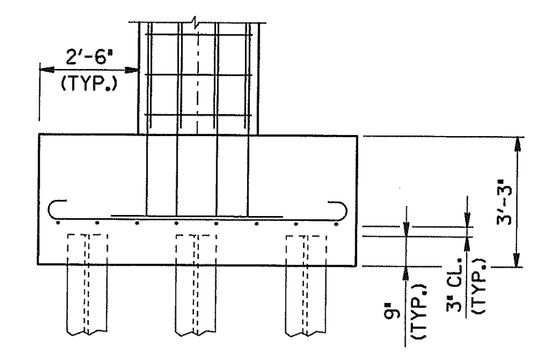

ALTERNATE ELEVATION OF FOOTING

(SHOWING PILE ARRANGEMENT)

TABLE OF STATIONS AND ELEVATIONS

ITEM	STATION "Y"	STATION "Z"	"A"	"B"	"C"	"D"
BENT NO. 1	113+91.47	113+91.66	462.88	462.65	461.73	436.50
BENT NO. 2	114+69.63	114+69.59	463.70	463.47	462.47	436.31
BENT NO. 4	116+27.81	116+28.43	462.99	462.75	461.76	430.47
BENT NO. 5	117+03.48	117+04.24	461.53	461.28	460.46	430.47

NOTE: STATIONS GIVEN AT ℄ BENT AND ℄ GIRDER.

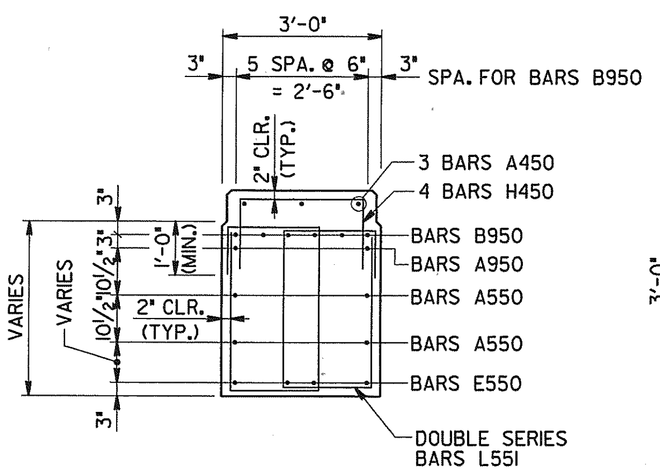

SECTION "A-A" ⚠

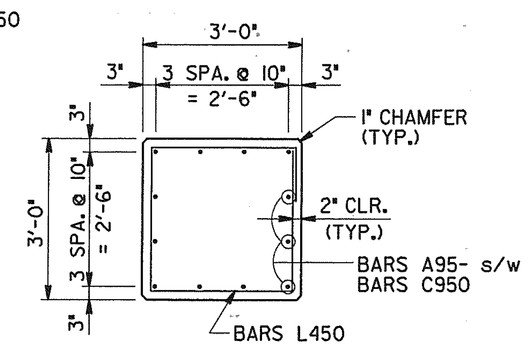

SECTION "B-B"

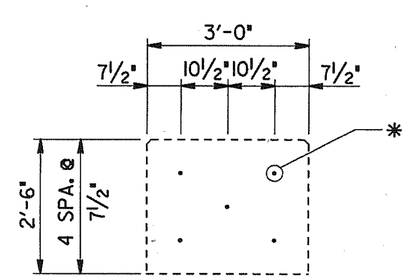

SECTION "C-C"

* INDICATES BARS DRILLED AND GROUTED INTO EXISTING CAP BEAM WITH 1'-9" EMBEDMENT. (BARS A750)

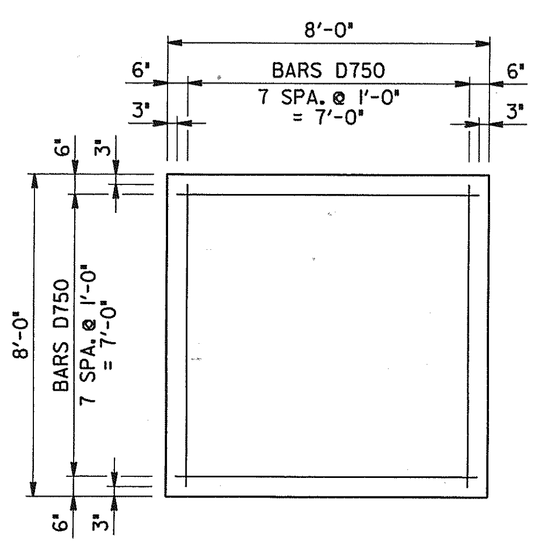

PLAN OF FOOTING

(SHOWING REINFORCEMENT)

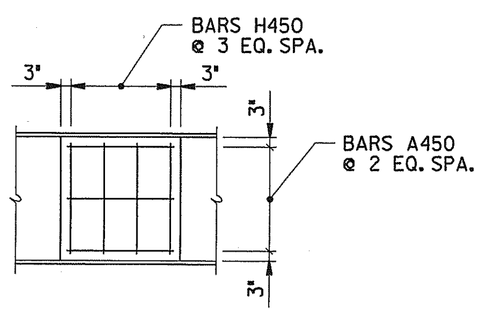

TYPICAL PLAN OF RISER BLOCK ⚠

WINFORD A. PETRONE
LICENSED PROFESSIONAL ENGINEER
01-15-02
NO. 13,774
STATE OF TENNESSEE

ESTIMATED QUANTITIES

ITEM	CLASS "A" CONCRETE C.Y.	REINFORCING STEEL LBS.
BENT NO. 1	20	2,836
BENT NO. 2	19	2,881
BENT NO. 4	20	3,131
BENT NO. 5	20	3,069

STATE OF TENNESSEE
DEPARTMENT OF TRANSPORTATION

BENT NOS. 1, 2, 4 AND 5
WIDENING OF INTERSTATE 40
OVER
CSX RAILROAD AND CLINTON STREET
STATION 116+75.34 (LOG MI. 16.75)
BRIDGE ID. NO. 19I00400063 (RT. LN.)
DAVIDSON COUNTY
2002

DESIGNED BY R. POTIER DATE 12/01
DRAWN BY LITTRELL, WILSON DATE 12/01
SUPERVISED BY PETRONE DATE 12/01
CHECKED BY WILSON, PETRONE DATE 12/01

TWilson 1/15/02 8:38 am PG1 I:copies D:\LOCAL\PGLL\BGINV\27200.15838\8.8394Bin1.TWilson.prf

M-427-61

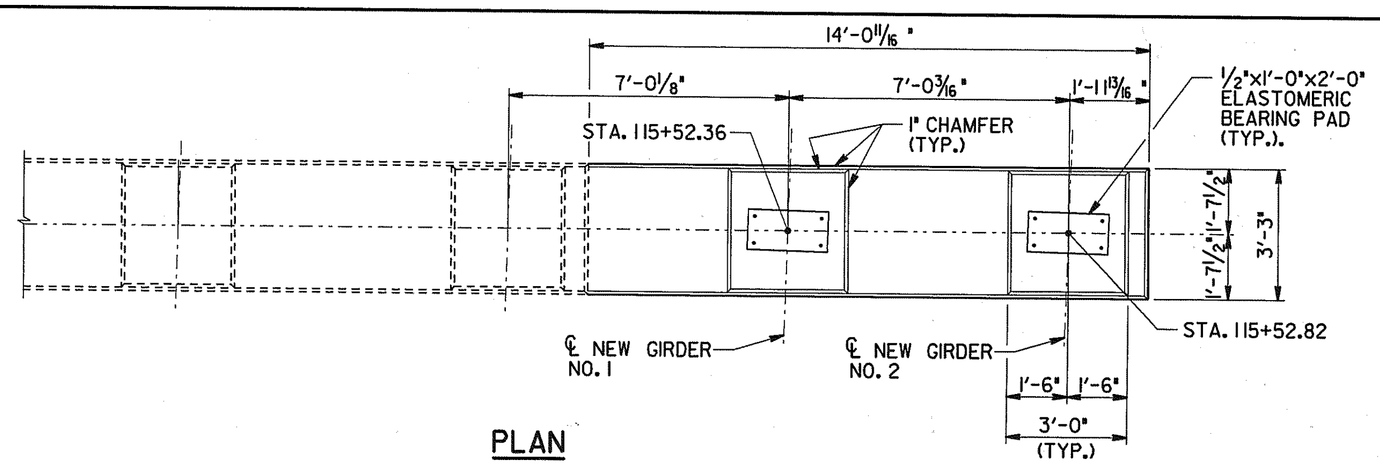

PLAN

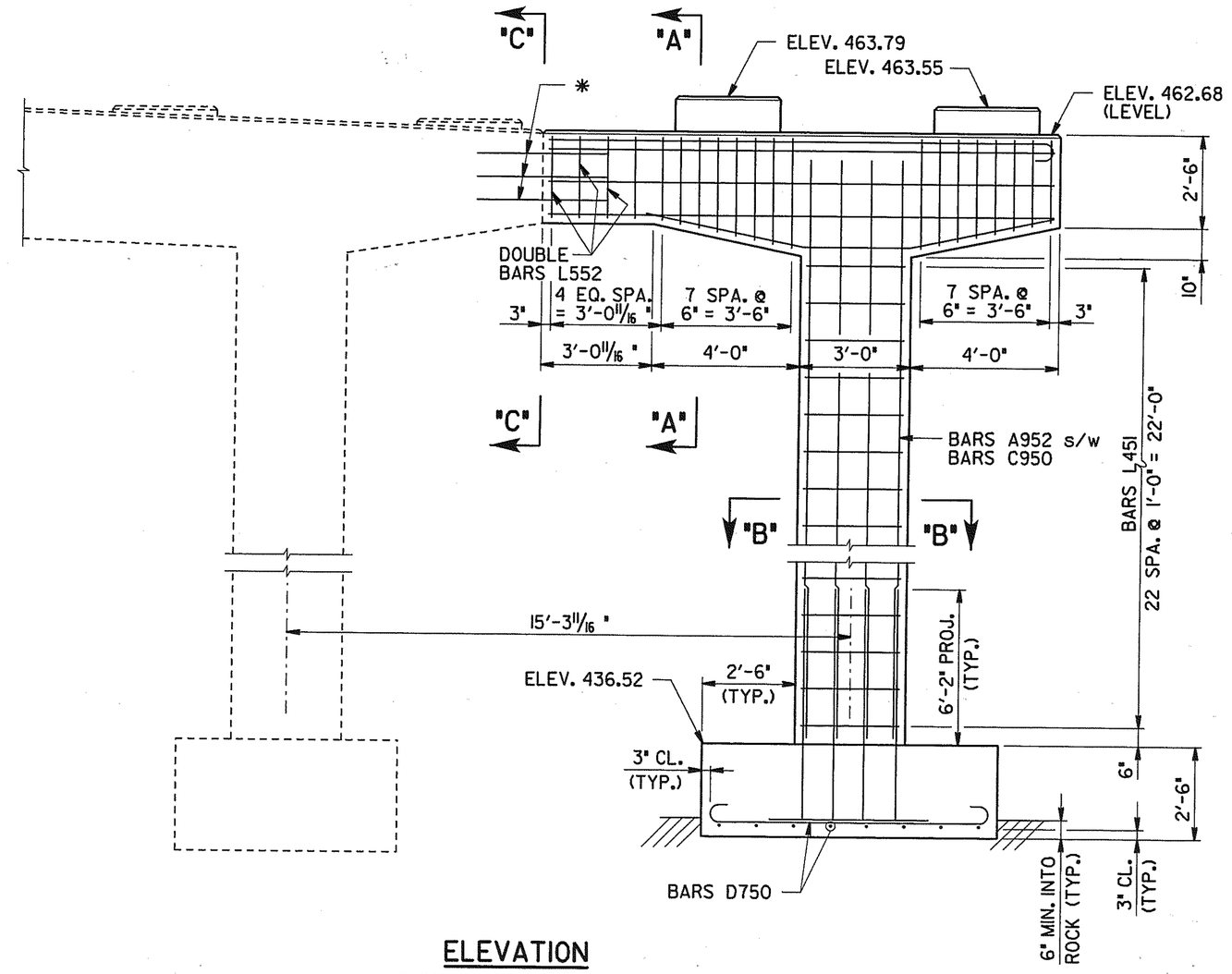

ELEVATION
(LOOKING FORWARD ON SURVEY)

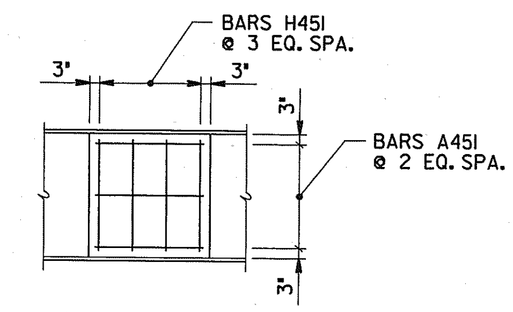

TYPICAL PLAN OF RISER BLOCK ⚠1

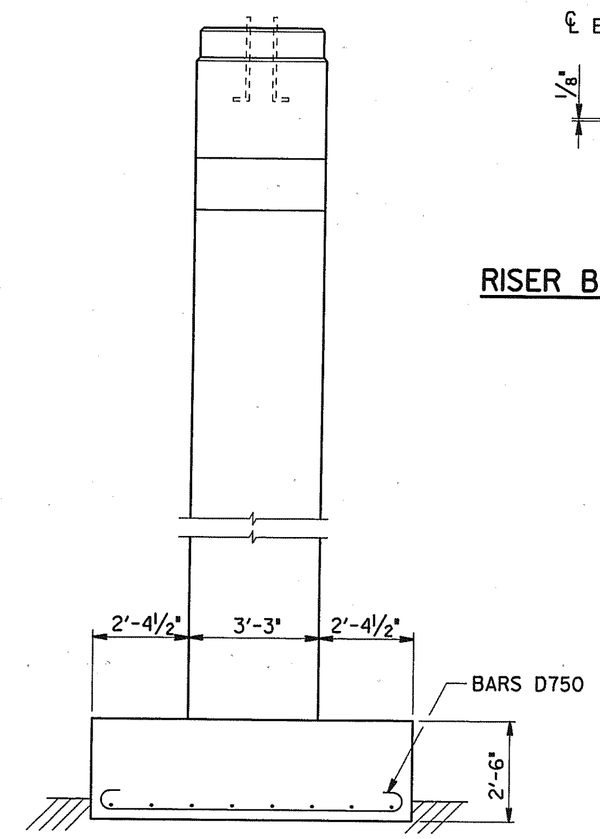

END ELEVATION

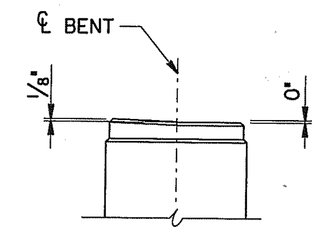

RISER BLOCK SLOPE DETAIL

NOTE: WHEN POURING CAP BEAM, PROVISIONS SHALL BE MADE FOR SETTING ANCHOR BOLTS. BOLT PROJECTION 3 3/4". SEE STANDARD DRAWING STD-6-1.

NOTE: RISER BLOCKS TO BE POURED MONOLITHICALLY WITH CAP BEAM.

NOTE: COLUMN STEEL TO EXTEND 2'-7" INTO CAP BEAM.

NOTE: ELEVATIONS GIVEN AT ℄ BENT AND ℄ GIRDER.

NOTE: ELASTOMERIC PADS SHALL BE IN PLACE A MINIMUM OF ONE DAY BEFORE BEING DISTURBED BY SETTING BEAMS. PLACE RUBBER BONDING CEMENT IN SUCH A WAY THAT VISIBLE CONCRETE SURFACES WILL NOT BE STAINED.

NOTE: RISER BLOCK BEARING SURFACE TO CONFORM TO BOTTOM OF BEAM GRADE.

CONST NO. 19005-3153-44

PROJECT NO.	YEAR	SHEET NO.
IM-40-4(73)206	2002	

REVISIONS

NO.	DATE	BY	BRIEF DESCRIPTION
1	1-10-02	W.A.P.	ADDED RISER BLOCK PLAN VIEW AND REVISED SECTION "A-A"

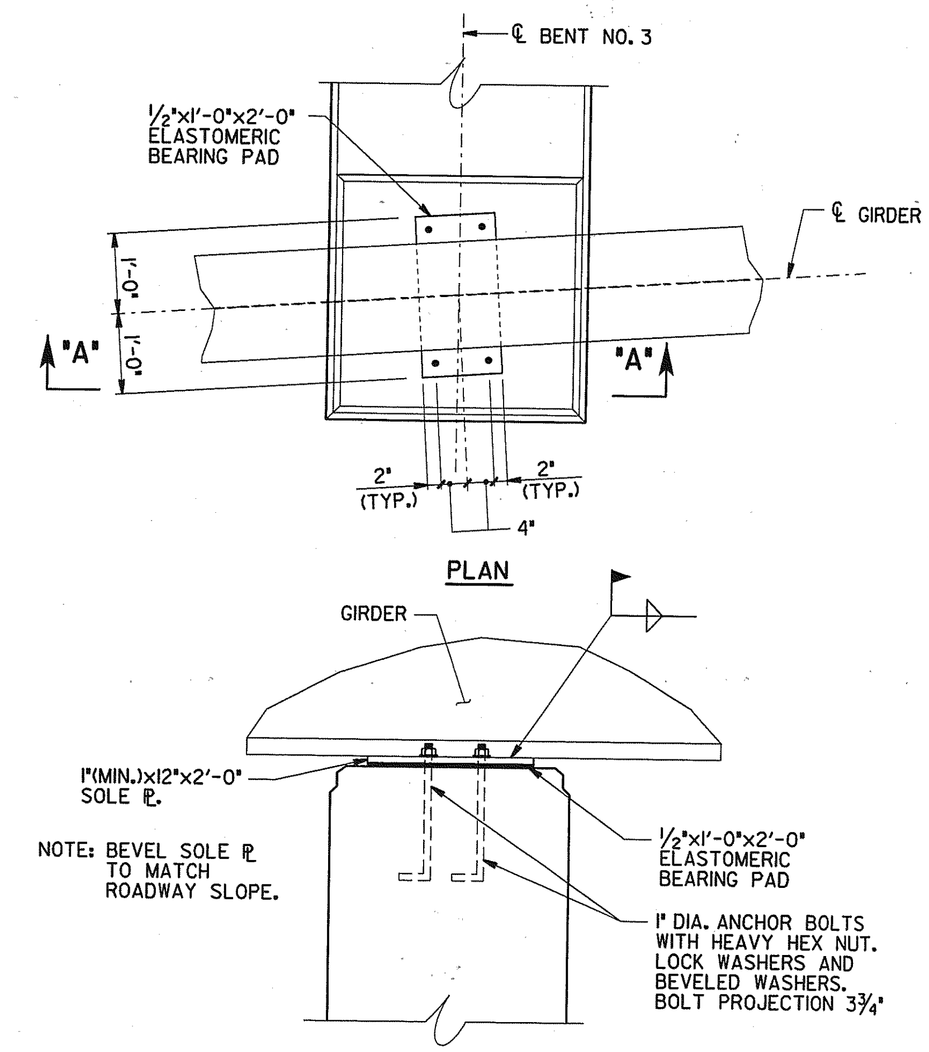

PLAN

SECTION "A-A"

SOLE PLATE DETAILS

NOTE: COST OF 1/2"x1'-0"x2'-0" ELASTOMERIC BEARING PAD AND 1" ANCHOR BOLT ASSEMBLIES SHALL BE INCLUDED IN THE PRICE BID FOR ITEM NO. 604-03.01, CLASS "A" CONCRETE (BRIDGES).

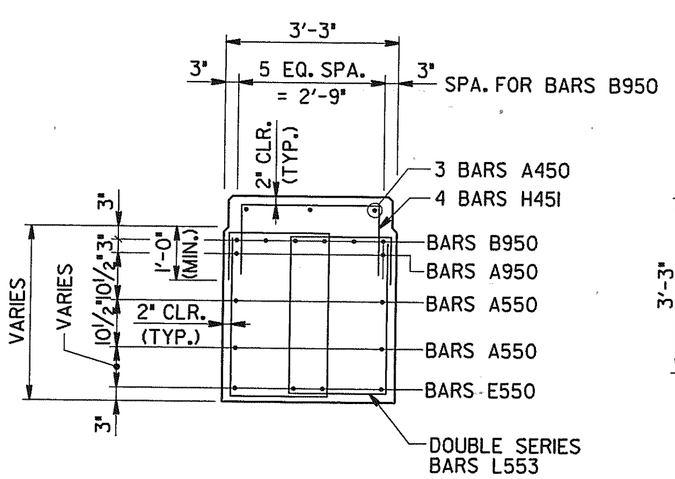

SECTION "A-A" ⚠1

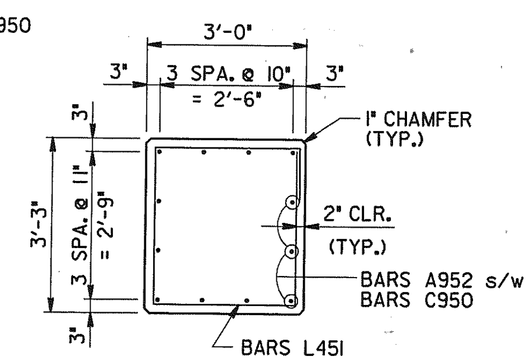

SECTION "B-B"

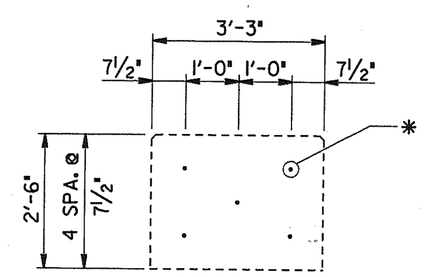

SECTION "C-C"

* INDICATES BARS DRILLED AND GROUTED INTO EXISTING CAP BEAM WITH 1'-9" EMBEDMENT. (BARS A750)

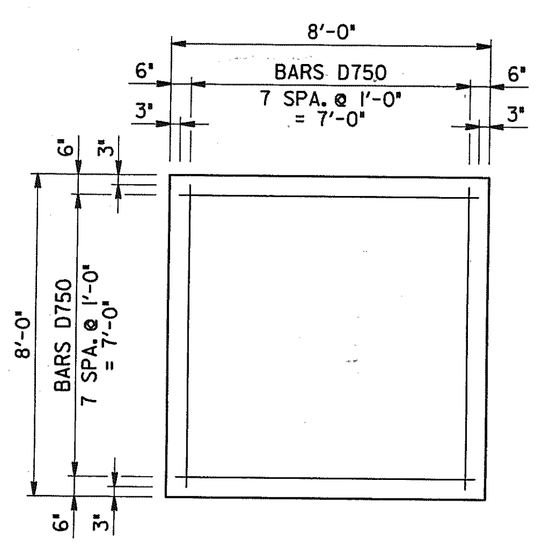

PLAN OF FOOTING
(SHOWING REINFORCEMENT)

WINFORD A. PETRONE
REGISTERED ENGINEER
AGRICULTURE
01/15/02
NO. 13,771
STATE OF TENNESSEE

ESTIMATED QUANTITIES

CLASS "A" CONCRETE C.Y.	REINFORCING STEEL LBS.
20	2,981

STATE OF TENNESSEE
DEPARTMENT OF TRANSPORTATION

BENT NO. 3
WIDENING OF INTERSTATE 40
OVER
CSX RAILROAD AND CLINTON STREET
STATION 116+75.34 (LOG MI. 16.75)
BRIDGE ID. NO. 19100400063 (RT. LN.)
DAVIDSON COUNTY
2002

DESIGNED BY R. POTIER DATE 12/01
DRAWN BY t. wilson DATE 12/01
SUPERVISED BY PETRONE DATE 12/01
CHECKED BY WILSON, PETRONE DATE 12/01

M-427-62

Twillison
Version
05/06/15
Not copied
Displayed MILL \\prjnv2170.1583848.83946tr2.twillison.pr4

CONST NO. 19005-3153-44

PROJECT NO.	YEAR	SHEET NO.
IM-40-4(73)206	2002	

REVISIONS

NO.	DATE	BY	BRIEF DESCRIPTION

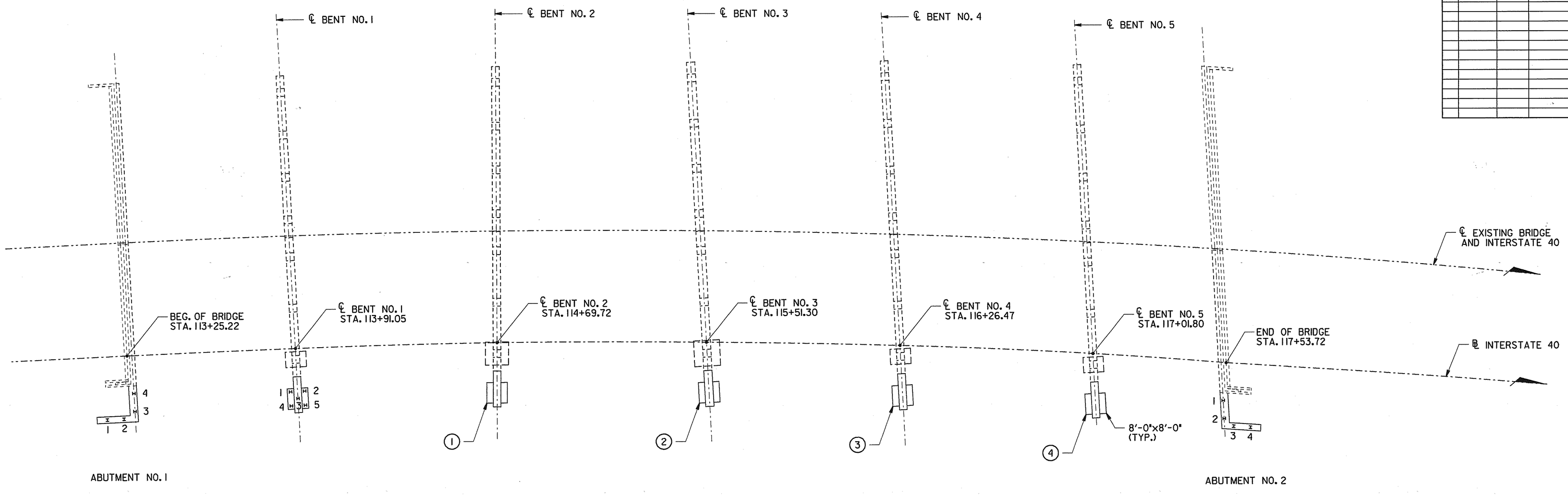

PLAN

TABLE SHOWING PILE NOS., P.C.O. ELEV. AND PILE LENGTHS

		PILE NUMBER				
		1	2	3	4	5
ABUTMENT NO. 1	P.C.O. ELEVATION					
	PILE TIP ELEVATION					
	IN PLACE PILE LENGTH					
ABUTMENT NO. 2	P.C.O. ELEVATION					
	PILE TIP ELEVATION					
	IN PLACE PILE LENGTH					
BENT NO. 1	P.C.O. ELEVATION					
	PILE TIP ELEVATION					
	IN PLACE PILE LENGTH					

TABLE SHOWING FOOTING ELEVATIONS

	1	2	3	4
FINAL TOP OF FOOTING ELEV.				
FINAL BOTTOM OF FOOTING ELEV.				

STATE OF TENNESSEE
DEPARTMENT OF TRANSPORTATION

FINAL FOUNDATION DATA
WIDENING OF INTERSTATE 40
OVER
CSX RAILROAD AND CLINTON STREET
STATION 116+75.34 (LOG MI. 16.75)
BRIDGE ID. NO. 19100400063 (RT. LN.)
DAVIDSON COUNTY
2002

M-427-63

DESIGNED BY R. POTIER DATE 12/01
DRAWN BY t. wilson DATE 12/01
SUPERVISED BY PETRONE DATE 12/01
CHECKED BY WILSON, PETRONE DATE 12/01

twilson
12/4/01
Rodale
Plot Scale: 1 pages
D:\LOCAL\FILL\BDNO\24992.583848.839485ffd.twilson.prf

BILL OF STEEL

CONST NO. 19005-3153-44

PROJECT NO.	YEAR	SHEET NO.
IM-40-4(73)206	2002	

REVISIONS

NO.	DATE	BY	BREF DESCRIPTION

SUPERSTRUCTURE

BAR	LOCATION	SIZE	NO. REQ'D	BENDING DIMENSIONS A	B	C	D	LENGTH
		EPOXY						
A500E	SLAB	5	12					17'-0"
SER. A501E	SLAB	5	1	BARS VARY IN LENGTH FROM 17'-1" TO 16'-6 1/2" IN INC. OF 1/8" (53 BARS)				891'-0"
SER. A502E	SLAB	5	1	BARS VARY IN LENGTH FROM 16'-6 1/2" TO 16'-3 5/16" IN INC. OF 1/16" (51 BARS)				836'-0"
A503E	SLAB	5	134					16'-3"
SER. A504E	SLAB	5	1	BARS VARY IN LENGTH FROM 16'-4 9/16" TO 16'-8 1/2" IN INC. OF 1/16" (64 BARS)				1058'-10"
A505E	SLAB	5	50					16'-10"
SER. A506E	SLAB	5	1	BARS VARY IN LENGTH FROM 16'-9" TO 16'-5 15/16" IN INC. OF 1/16" (50 BARS)				831'-1"
A507E	SLAB	5	144					16'-5"
A508E	SLAB	5	85					16'-7"
SER. A509E	SLAB	5	1	BARS VARY IN LENGTH FROM 16'-3 5/16" TO 16'-5 5/16" IN INC. OF 1/16" (31 BARS)				507'-0"
SER. A510E	SLAB	5	1	BARS VARY IN LENGTH FROM 16'-5 1/2" TO 17'-1" IN INC. OF 1/8" (49 BARS)				821'-9"
A511E	SLAB	5	555					30'-0"

SUPERSTRUCTURE CONT'D.

BAR	LOCATION	SIZE	NO. REQ'D	BENDING DIMENSIONS A	B	C	D	LENGTH
SER. A512E	SLAB	5	2	BARS VARY IN LENGTH FROM 14'-5" TO 16'-5" IN INC. OF 1 7/16" (19 BARS)				254'-11"
A600E	SLAB	6	32					40'-0"
A601E	SLAB	6	48					44'-0"
B471E	SLAB	4	854	2'-7"				3'-1"
B500E	SLAB	5	12	17'-0"				17'-7"
SER. B501E	SLAB	5	1	DIM "A" VAR. IN LENGTH FROM 17'-1" TO 16'-6 1/2" IN INC. OF 1/8" (53 BARS)				921'-11"
SER. B502E	SLAB	5	1	DIM "A" VAR. IN LENGTH FROM 16'-6 1/2" TO 16'-3 5/16" IN INC. OF 1/16" (51 BARS)				866'-7"
B503E	SLAB	5	134	16'-3"				16'-10"
SER. B504E	SLAB	5	1	DIM "A" VAR. IN LENGTH FROM 16'-4 9/16" TO 16'-8 1/2" IN INC. OF 1/16" (64 BARS)				1096'-2"
B505E	SLAB	5	50	16'-10"				17'-5"
SER. B506E	SLAB	5	1	DIM "A" VAR. IN LENGTH FROM 16'-9" TO 16'-5 15/16" IN INC. OF 1/16" (50 BARS)				860'-3"
B507E	SLAB	5	144	16'-5"				17'-0"
B508E	SLAB	5	85	16'-7"				17'-2"

SUPERSTRUCTURE CONT'D.

BAR	LOCATION	SIZE	NO. REQ'D	BENDING DIMENSIONS A	B	C	D	LENGTH
SER. B509E	SLAB	5	1	DIM "A" VAR. IN LENGTH FROM 16'-3 5/16" TO 16'-5 5/16" IN INC. OF 1/16" (31 BARS)				525'-1"
SER. B510E	SLAB	5	1	DIM "A" VAR. IN LENGTH FROM 16'-5 1/2" TO 17'-1" IN INC. OF 1/8" (49 BARS)				850'-4"

REINFORCING STEEL CODE

Type	Size	Series

NOTE: Dimensions shown on this sheet are outside to outside of Bar. Standard C.R.S.I. hook details shall apply.

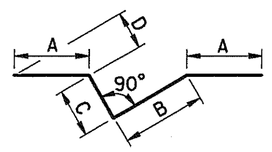

BARS JX

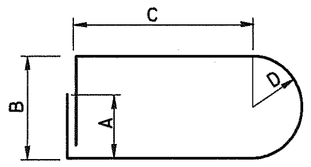

BARS X

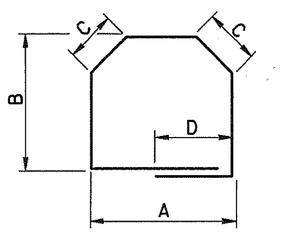

BARS M

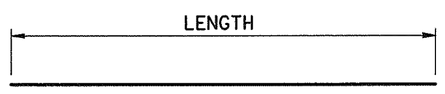

BARS A

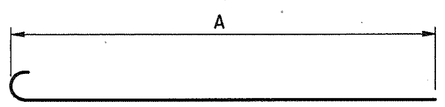

BARS B

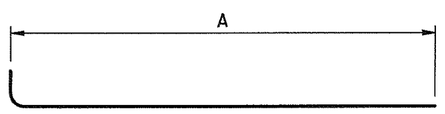

BARS C

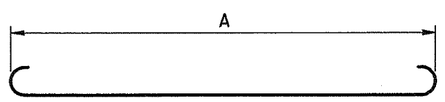

BARS D

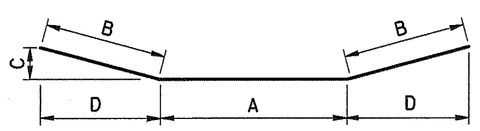

BARS E

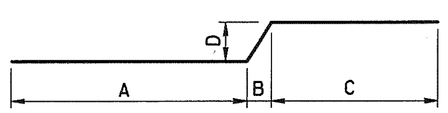

BARS F

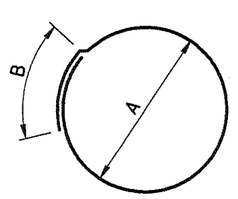

BARS T

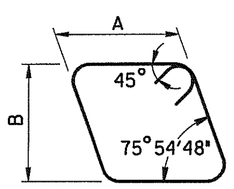

BARS LS

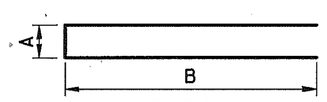

BARS H

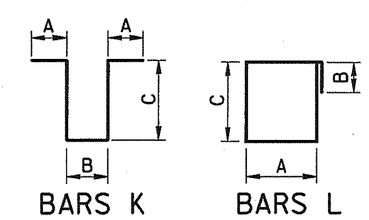

BARS K BARS L

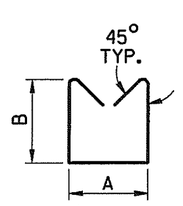

BARS S

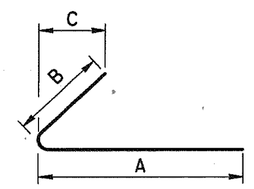

BARS CB

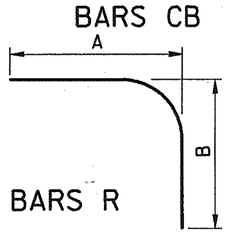

BARS R

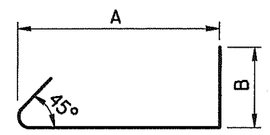

BARS YB

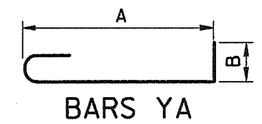

BARS YA

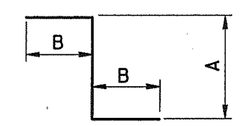

BARS Z

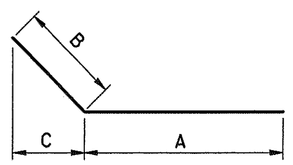

BARS CD

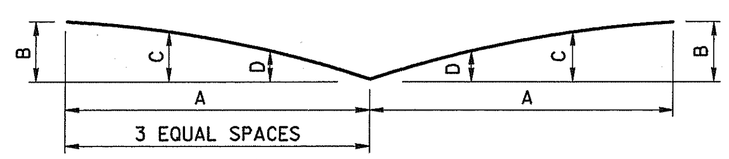

BARS V

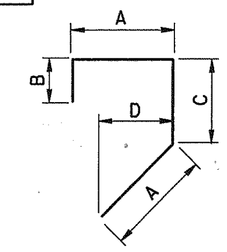

BARS J

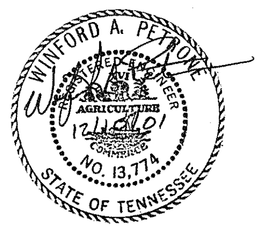

STATE OF TENNESSEE
DEPARTMENT OF TRANSPORTATION

BILL OF STEEL
WIDENING OF INTERSTATE 40
OVER
CSX RAILROAD AND CLINTON STREET
STATION 116+75.34 (LOG MI. 16.75)
BRIDGE ID. NO. 19I00400063 (RT. LN.)
DAVIDSON COUNTY
2002

M-427-64

DESIGNED BY	R. POTIER	DATE	12/01
DRAWN BY	t. wilson	DATE	12/01
SUPERVISED BY	PETRONE	DATE	12/01
CHECKED BY	WILSON, PETRONE	DATE	12/01

twilson
12/04/01
12:04:38
D:\LOCAL\UTIL\SGINDX24952_J583848_B3848bsl_twilson.prf

BILL OF STEEL

CONST NO. 19005-3153-44

PROJECT NO.	YEAR	SHEET NO.
IM-40-4(73)206	2002	

REVISIONS

NO.	DATE	BY	BRIEF DESCRIPTION

ABUTMENT NO. 1

BAR	LOCATION	SIZE	NO. REQ'D	BENDING DIMENSIONS A	B	C	D	LENGTH
			EPOXY					
A470E	WINGWALL	4	8					3'-11"
A640E	BACKWALL	6	2					14'-9"
A641E	BACKWALL	6	30					4'-4"
B470E	WINGWALL	4	22	2'-7"				3'-1"
F640E	BACKWALL	6	14	1'-0"	1'-3"	1'-0"	1'-3"	3'-9"
			REGULAR					
A440	BACKWALL	4	1					14'-0"
A441	WINGWALL	4	1					13'-0"
A442	WINGWALL	4	4					15'-0"
A443	WINGWALL	4	14					4'-0"
A444	WINGWALL	4	4					3'-5"
A445	WINGWALL	4	4					3'-6"
A446	WINGWALL	4	1					12'-0
A447	RISER	4	6					2'-8"
A540	ABUT. BEAM	5	2					13'-11"
A541	WING BEAM	5	2					15'-0"
A542	BACKWALL	5	6					2'-6"
A640	WINGWALL	6	14					4'-0"
A641	WINGWALL	6	1					13'-0"
A642	WINGWALL	6	4					15'-0"
A643	ABUT. BEAM	6	4					3'-6"
A740	ABUT. BEAM	7	10					13'-11"
A741	WING BEAM	7	9					15'-0"
A742	ABUT. BEAM	7	5					3'-6"
C640	BACKWALL	6	5	14'-9"				15'-9"
C641	BACKWALL	6	5	14'-4"				15'-4"
H440	RISER	4	8	1'-6"	1'-9"			5'-0"
H540	BACKWALL	5	14	1'-8"	6"			2'-8"
H640	WINGWALL	6	27	8"	4'-0"			8'-8"

ABUTMENT NO. 1

BAR	LOCATION	SIZE	NO. REQ'D	BENDING DIMENSIONS A	B	C	D	LENGTH
J540	WINGWALL	5	13	1'-5"	1'-0"	9"	1'-0"	4'-7"
L540	ABUT. BEAM	5	12	2'-8"	1'-0"	2'-2"		10'-8"
L541	WINGWALL	5	12	2'-2"	1'-0"	2'-2"		9'-8"

ABUTMENT NO. 2

BAR	LOCATION	SIZE	NO. REQ'D	BENDING DIMENSIONS A	B	C	D	LENGTH
			EPOXY					
A470E	WINGWALL	4	8					3'-11"
A640E	BACKWALL	6	2					14'-3"
A641E	BACKWALL	6	28					3'-10"
B470E	WINGWALL	4	22	2'-7"				3'-1"
F640E	BACKWALL	6	14	1'-0"	1'-3"	1'-0"	1'-3"	3'-9"
			REGULAR					
A440	BACKWALL	4	1					13'-6"
A441	WINGWALL	4	1					13'-0"
A442	WINGWALL	4	4					15'-0"
A443	WINGWALL	4	14					3'-7"
A444	WINGWALL	4	4					3'-0"
A445	WINGWALL	4	4					3'-6"
A446	WINGWALL	4	1					12'-0
A447	RISER	4	6					2'-8"
A540	ABUT. BEAM	5	2					13'-6"
A541	WING BEAM	5	2					15'-0"
A542	BACKWALL	5	6					2'-6"
A640	WINGWALL	6	14					3'-7"
A641	WINGWALL	6	1					13'-0"
A642	WINGWALL	6	4					15'-0"
A643	ABUT. BEAM	6	4					3'-6"
A740	ABUT. BEAM	7	10					13'-6"
A741	WING BEAM	7	9					15'-0"
A742	ABUT. BEAM	7	5					3'-6"
CD640	BACKWALL	6	4	14'-3"	1'-0"	1 7/16"		15'-3"
CD641	BACKWALL	6	4	13'-10"	1'-0"	1 7/16"		14'-10"
H440	RISER	4	8	1'-6"	1'-9"			5'-0"
H540	BACKWALL	5	14	1'-8"	6"			2'-8"
H640	WINGWALL	6	28	8"	4'-0"			8'-8"

REINFORCING STEEL CODE

Type	Size	Series

NOTE: Dimensions shown on this sheet are outside to outside of Bar. Standard C.R.S.I. hook details shall apply.

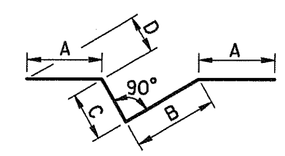

BARS JX

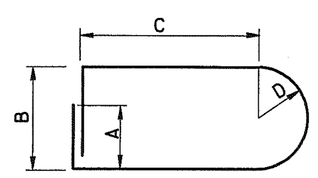

BARS X

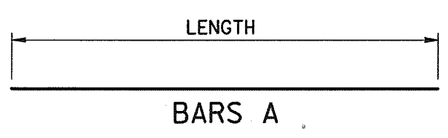

BARS A

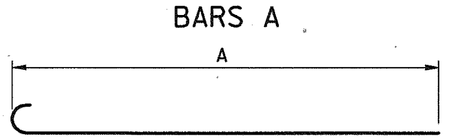

BARS B

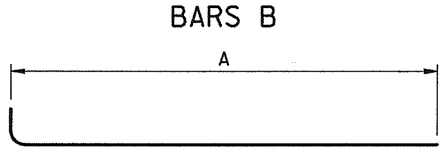

BARS C

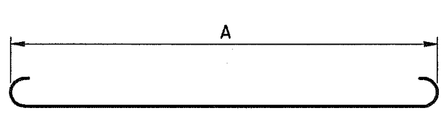

BARS D

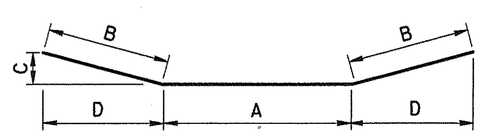

BARS E

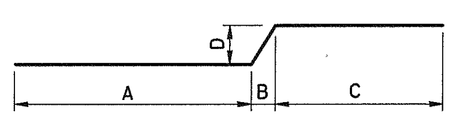

BARS F

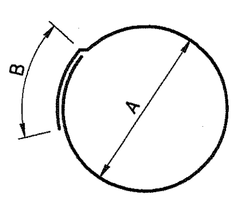

BARS T

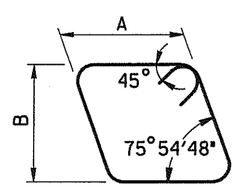

BARS LS

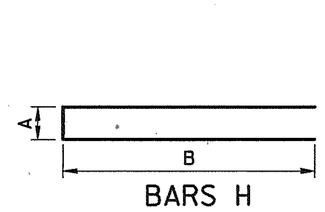

BARS H

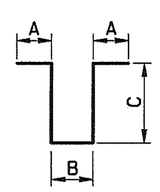

BARS K

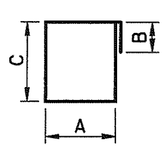

BARS L

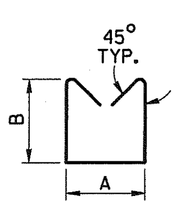

BARS S

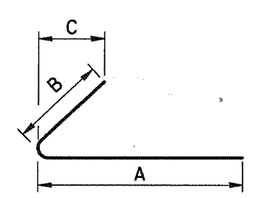

BARS CB

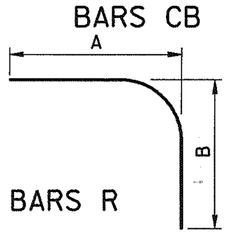

BARS R

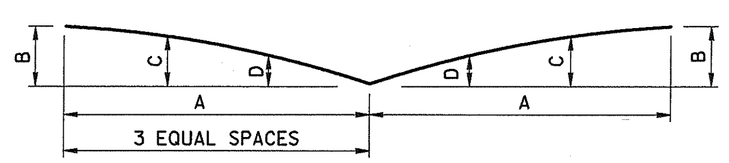

BARS V

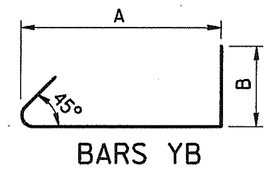

BARS YB

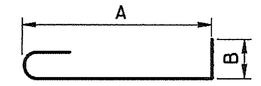

BARS YA

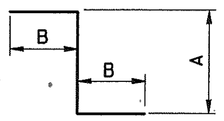

BARS Z

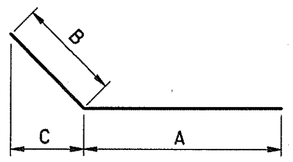

BARS CD

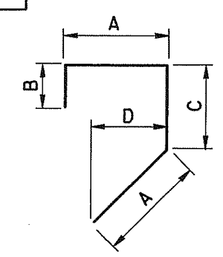

BARS J

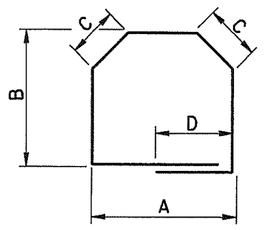

BARS M

STATE OF TENNESSEE
DEPARTMENT OF TRANSPORTATION

BILL OF STEEL
WIDENING OF INTERSTATE 40
OVER
CSX RAILROAD AND CLINTON STREET
STATION 116+75.34 (LOG MI. 16.75)
BRIDGE ID. NO. 19I00400063 (RT. LN.)
DAVIDSON COUNTY
2002

DESIGNED BY	R. POTIER	DATE	12/01
DRAWN BY	T. WILSON	DATE	12/01
SUPERVISED BY	PETRONE	DATE	12/01
CHECKED BY	WILSON, PETRONE	DATE	12/01

M-427-65

twilson
12/04/01
12:04:53
PW:D:\LOCALUTILS\BOND\24952\j538148\j538148b2.twilson.prf

BILL OF STEEL

CONST NO. 19005-3153-44

PROJECT NO.	YEAR	SHEET NO.
IM-40-4(73)206	2002	

REVISIONS

NO.	DATE	BY	BRIEF DESCRIPTION

ABUTMENT NO. 2

BAR	LOCATION	SIZE	NO. REQ'D	BENDING DIMENSIONS A	B	C	D	LENGTH
J540	WINGWALL	5	13	1'-5"	1'-0"	9"	1'-0"	4'-7"
L540	ABUT. BEAM	5	11	2'-8"	1'-0"	2'-2"		10'-8"
L541	WINGWALL	5	12	2'-2"	1'-0"	2'-2"		9'-8"

BENT NOS. 1,2,4 AND 5

BAR	LOCATION	SIZE	NO. REQ'D	BENDING DIMENSIONS A	B	C	D	LENGTH
A450	RISER	4	24					2'-8"
A550	CAP BEAM	5	16					13'-7"
A750	CAP BEAM	7	20					3'-6"
A950	CAP BEAM	9	8					13'-7"
A951	COLUMN	9	12					24'-3"
A952	COLUMN	9	12					25'-2"
A953	COLUMN	9	12					30'-4"
A954	COLUMN	9	12					29'-0"
B950	CAP BEAM	9	24	13'-7"				14'-11"
C950	FOOTING	9	48	8'-5"				10'-0"
D750	FOOTING	7	64	7'-6"				9'-3"
E550	CAP BEAM	5	16	3'-0"	3'-10"	10"	3'-9"	10'-8"
H450	RISER	4	32	2'-6"	1'-11"			6'-4"
L450	COLUMN	4	100	2'-8"	1'-0"	2'-8"		11'-8"
L550	CAP BEAM	5	32	1'-8"	1'-0"	2'-2"		8'-8"
SER. L551	CAP BEAM	5	16	1'-8"	1'-0"			75'-6"
				DIM "C" VAR. IN LENGTH FROM 2'-2" TO 2'-11 13/8" IN INC. OF 15/16" (8 BARS)				

BENT NO. 3

BAR	LOCATION	SIZE	NO. REQ'D	BENDING DIMENSIONS A	B	C	D	LENGTH
A450	RISER	4	6					2'-8"
A550	CAP BEAM	5	4					13'-7"
A750	CAP BEAM	7	5					3'-6"
A950	CAP BEAM	9	2					13'-7"
A952	COLUMN	9	12					25'-2"
B950	CAP BEAM	9	6	13'-7"				14'-11"
C950	FOOTING	9	12	8'-5"				10'-0"
D750	FOOTING	7	16	7'-6"				9'-3"
E550	CAP BEAM	5	4	3'-0"	3'-10"	10"	3'-9"	10'-2"
H451	RISER	4	8	2'-9"	1'-0"	2'-11"		6'-7"
L451	COLUMN	4	23	2'-8"	1'-0"	2'-2"		12'-2"
L552	CAP BEAM	5	8	1'-9 1/2"	1'-0"	2'-2"		8'-11"
SER. L553	CAP BEAM	5	4	1'-9 1/2"	1'-0"			77'-6"
				DIM "C" VAR. IN LENGTH FROM 2'-2" TO 2'-11 13/8" IN INC. OF 15/16" (8 BARS)				

REINFORCING STEEL CODE

Type	Size	Series

NOTE: Dimensions shown on this sheet are outside to outside of Bar. Standard C.R.S.I. hook details shall apply.

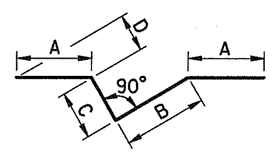

BARS JX

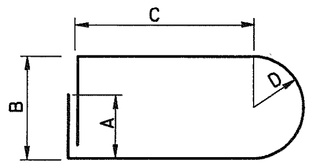

BARS X

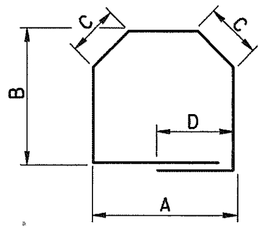

BARS M

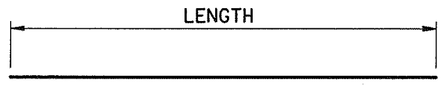

BARS A

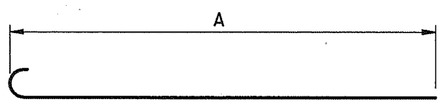

BARS B

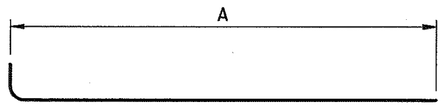

BARS C

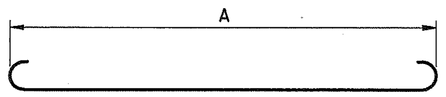

BARS D

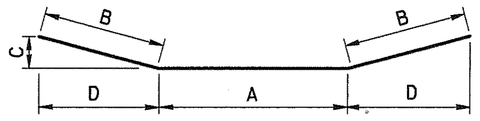

BARS E

BARS F

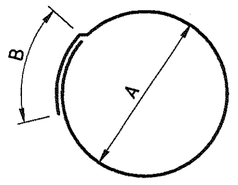

BARS T

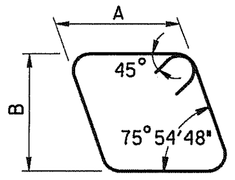

BARS LS

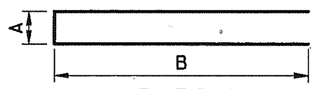

BARS H

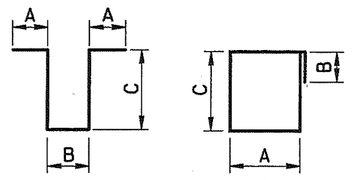

BARS K BARS L

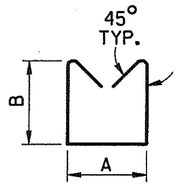

BARS S

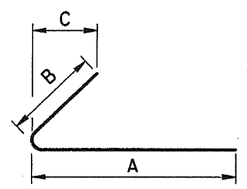

BARS CB

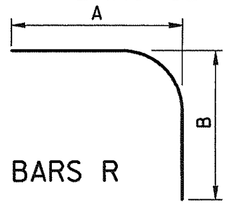

BARS R

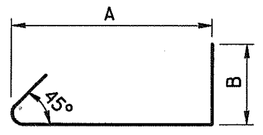

BARS YB

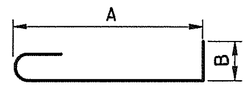

BARS YA

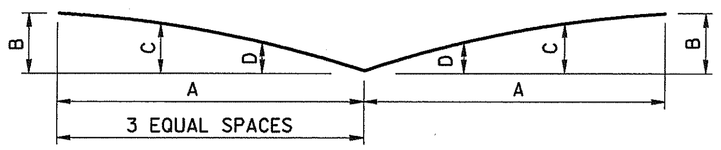

BARS V

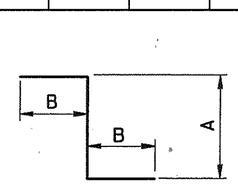

BARS Z

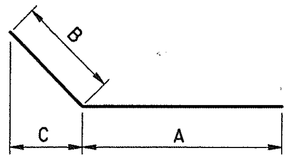

BARS CD

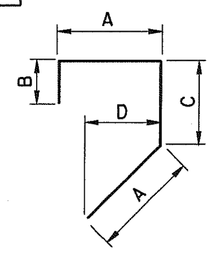

BARS J

STATE OF TENNESSEE
DEPARTMENT OF TRANSPORTATION

BILL OF STEEL
WIDENING OF INTERSTATE 40
OVER
CSX RAILROAD AND CLINTON STREET
STATION 116+75.34 (LOG MI. 16.75)
BRIDGE ID. NO. 19100400063 (RT. LN.)
DAVIDSON COUNTY
2002

M-427-66

DESIGNED BY	R. POTIER	DATE	12/01
DRAWN BY	t. wilson	DATE	12/01
SUPERVISED BY	PETRONE	DATE	12/01
CHECKED BY	WILSON, PETRONE	DATE	12/01

twilson
12/10/01
pw:pw
pw:pw
D:\LOCAL\FULL\BGNDV2492_083848_83848b3_twilson.pr6

CONST. NO. 19005-3153-44

PROJECT NO.	YEAR	SHEET NO.
IM-40-4(73)206	2002	

REVISIONS

NO.	DATE	BY	BRIEF DESCRIPTION
1	1-10-02	W.A.P.	REV. LIST OF DWG'S.
2	1-21-02	W.A.P.	REV. LIST OF DWG'S.

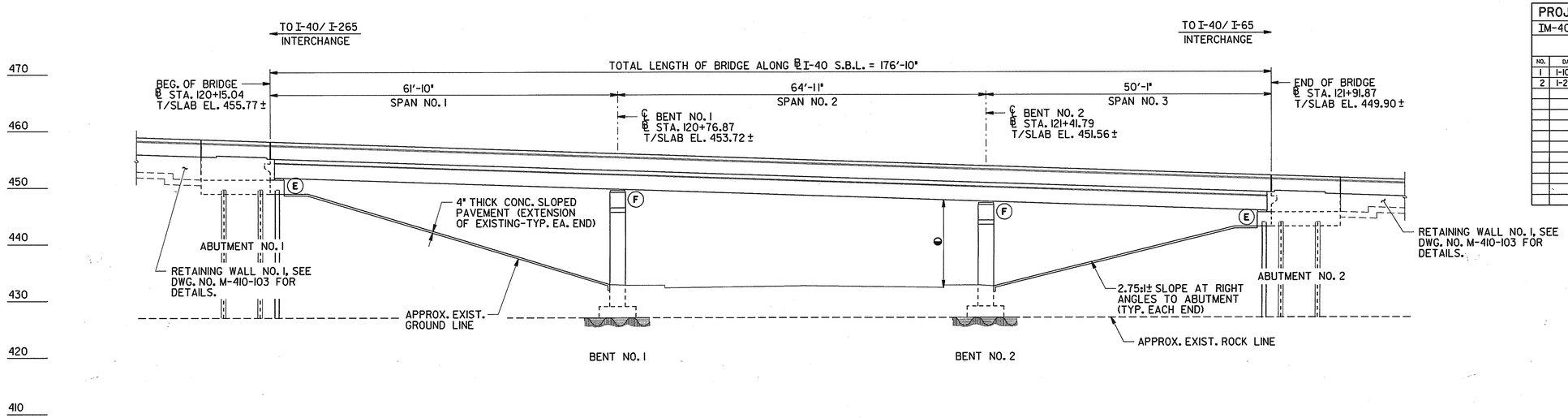

ELEVATION

(AT RIGHT ANGLES TO ℄ I-40 S.B.L.)
SCALE: 1" = 10'

NOTE: THE FILLS AT THE ENDS OF THE BRIDGE SHALL BE IN PLACE AND THOROUGHLY COMPACTED BEFORE ANY ABUTMENT PILES ARE DRIVEN.

◯ DENOTES: EXISTING AND PROPOSED SUPPORT CONDITION.

E DENOTES: EXPANSION

F DENOTES: FIXED

⊖ DENOTES: EXISTING MINIMUM VERT. CLEARANCE = 15'-1⅝"
PROPOSED MINIMUM VERT. CLEARANCE = 15'-3⅞"
(BOTH SHOWN AT BOTTOM OF CURB)

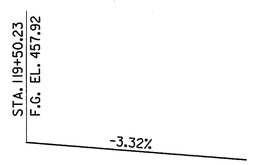

PROPOSED GRADE AT TOP OF SLAB

(FOR BRIDGE CONSTRUCTION ONLY)

NOTE: TOP OF SLAB TO BE 3¼"± BELOW FINAL ASPHALT GRADES AS SHOWN ON ROADWAY PLANS.

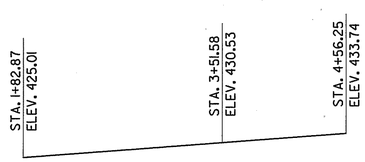

GRAPHICAL GRADE

(JO JOHNSON STREET)

LIST OF STANDARD DRAWINGS

DWG. NO.	LAST REV. DATE	DRAWING
STD-1-1	7-31-00	BRIDGE RAILING CONCRETE PARAPET
STD-1-2	1-05-01	STEEL SLIDER PLATE ASSEMBLIES FOR CONCRETE PARAPET AND BRIDGE DECK DRAIN DETAILS
STD-1-5	7-31-00	REINFORCED CONCRETE PAVEMENT AT BRIDGE ENDS
STD-1-6	4-28-97	BRIDGE END DRAIN DETAILS 2'x8'-7" AND 4'x8'-7" WITH PAVEMENT AT BRIDGE ENDS
STD-1-7	7-31-00	BRIDGE END DRAIN DETAILS 2'x8'-7" AND 4'x8'-7" WITH PAVEMENT AT BRIDGE ENDS
STD-1-9	5-01-95	BRIDGE END DRAIN DETAILS 4'x8'-7" WITH PAVEMENT AT BRIDGE ENDS
STD-4-1	5-21-99	STANDARD PRECAST PRESTRESSED BRIDGE DECK PANELS GENERAL DETAILS
STD-4-2	6-10-96	STANDARD PRECAST PRESTRESSED BRIDGE DECK PANELS DESIGN CRITERIA
STD-4-3	6-10-96	STANDARD PRECAST PRESTRESSED BRIDGE DECK PANELS GENERAL DETAILS
STD-4-4	6-10-96	STANDARD PRECAST PRESTRESSED BRIDGE DECK PANELS CONSTRUCTION DETAILS
STD-5-1	10-25-93	STANDARD PILE DETAILS
STD-5-2	5-21-99	STANDARD PILE DETAILS
STD-6-1	5-21-99	STANDARD SEISMIC DETAILS
STD-8-2	9-01-91	LIGHT STANDARD-SUPPORT DETAILS
STD-9-1	12-19-94	REINFORCING BAR SUPPORT DETAILS FOR CONCRETE SLABS
STD-10-1	5-11-92	MISCELLANEOUS ABUTMENT AND DRAINAGE DETAILS
STD-14-3	7-31-00	DETAILS FOR PRESTRESSED BOX BEAMS
RD-SA-1	5-27-98	SAFETY APPROACH TO UNDERPASSES GRADING DESIGN AND SLOPE PROTECTION

LIST OF SPECIAL PROVISIONS

NO.	LAST REV. DATE	REGARDING
105A	12-15-97	APPROVAL OF SHOP DRAWINGS
604CR	2-19-96	REPAIR OF BRIDGE DECK CRACKS

LIST OF DRAWINGS 1 2

DWG. NO.	LAST REV. DATE	DRAWING
M-427-67	1-21-02	ELEVATION OF BRIDGE NO. 3
M-427-68	1-21-02	PLAN OF BRIDGE NO. 3
M-427-69	1-21-02	GENERAL NOTES
M-427-70	1-21-02	ESTIMATED QUANTITIES
M-427-71		FOUNDATION DATA
M-427-72		SUPERSTRUCTURE
M-427-73		SUPERSTRUCTURE DETAILS
M-427-74		SUPERSTRUCTURE DETAILS
M-427-75		SUPERSTRUCTURE DETAILS
M-427-76		SUPERSTRUCTURE DETAILS
M-427-77		BRIDGE SCREED
M-427-78		PRESTRESSED BEAM DETAILS SPAN NOS. 1 AND 2
M-427-79		PRESTRESSED BEAM DETAILS SPAN NO. 3
M-427-80	1-10-02	ABUTMENT NO. 1
M-427-81	1-10-02	ABUTMENT NO. 2
M-427-82	1-10-02	BENT NOS. 1 AND 2
M-427-83		FINAL FOUNDATION DATA
M-427-84		BILL OF STEEL
M-427-85		BILL OF STEEL

* REFERENCE DRAWINGS

DWG. NOS. K-80-29 THRU K-80-37
AND BR-46-96, 97, 100, 101, 102, 104

*DENOTES: THESE DRAWINGS ARE TO BE PRINTED WITH PLANS.

WINFORD A. PETRONE
REGISTERED ENGINEER
AGRICULTURE
NO. 13,774
STATE OF TENNESSEE
1-21-02

ESTIMATED ADT (2022) = 50,200

DESIGN SPEED = 55 M.P.H.

VARYING ROADWAY WITH TYPE STD-1-1 (MODIFIED) CONCRETE PARAPET

STATE OF TENNESSEE
DEPARTMENT OF TRANSPORTATION

ELEVATION OF BRIDGE NO. 3
WIDENING OF INTERSTATE 40
OVER
JO JOHNSON STREET
STATION 121+09.40 (LOG MI. 16.88)
BRIDGE ID. NO. 19100400065 (RT. LN.)
DAVIDSON COUNTY
2002

M-427-67

DESIGNED BY W. PETRONE DATE 12/01
DRAWN BY LITTRELL, WILSON DATE 12/01
SUPERVISED BY PETRONE DATE 12/01
CHECKED BY WILSON, PETRONE DATE 12/01

TWilson
1/21/02
10:10 AM
POP-1 (COBB)
D:\LOCAL\FILL\BDN\27596.5838\9.838\9sub.TWilson.pr1

PORTABLE BARRIER RAIL 177 FEET

CONST. NO. 19005-3153-44

PROJECT NO.	YEAR	SHEET NO.
IM-40-4(73)206	2002	

REVISIONS

NO.	DATE	BY	BRIEF DESCRIPTION
1	1-10-02	W.A.P.	REVISED P.A.B.E. NOTE
2	1-21-02	W.A.P.	ADDED SECTION "A-A"

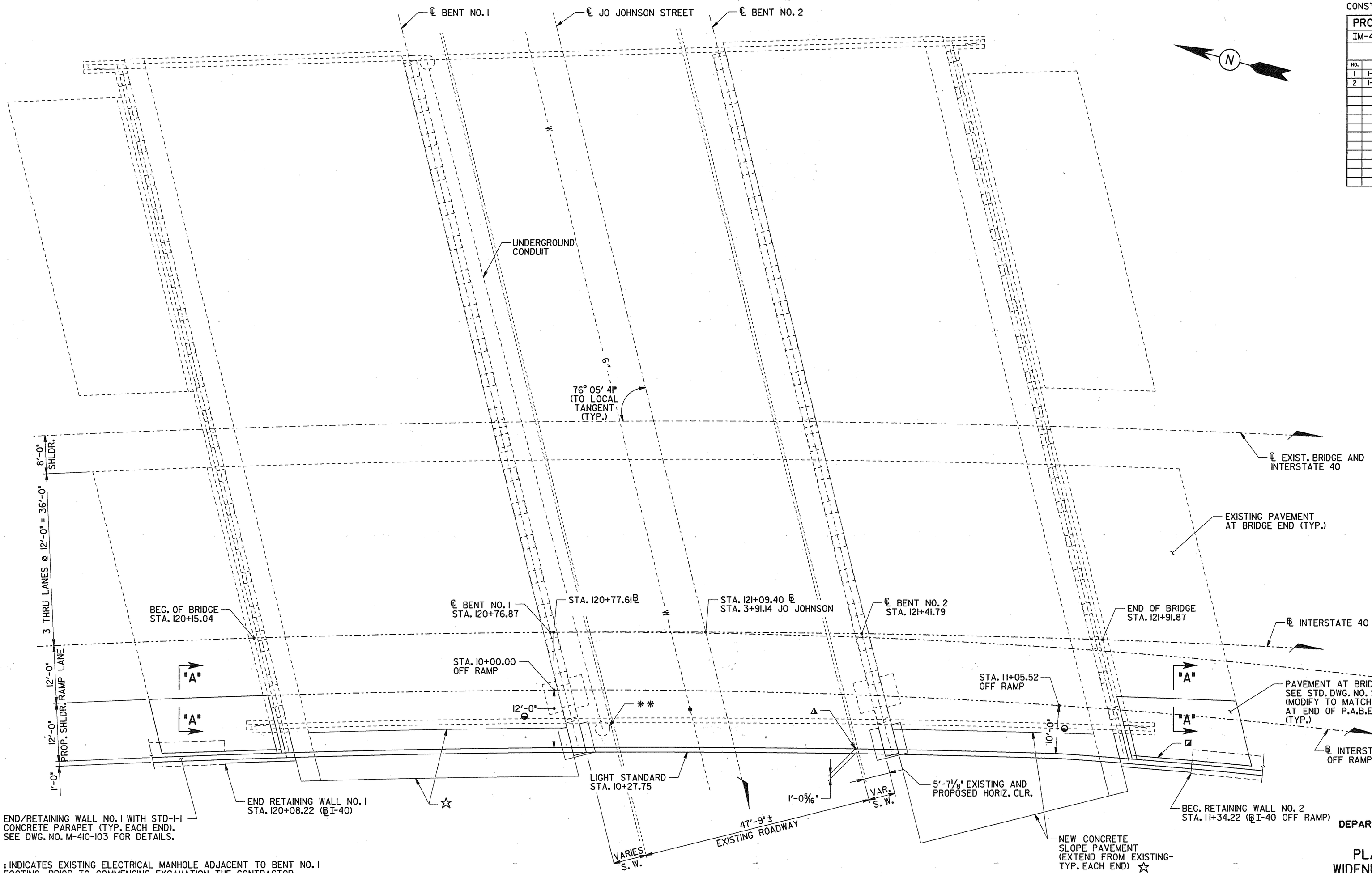

CURVE DATA BASE LINE INTERSTATE 40

P.I. STA. 121+20.22
N=667,346.005
E=1,734,260.015
Δ=12° 56'13" (RT.)
D=2° 05'56"
R=2,729.85
L=616.39
T=309.51

CURVE DATA OFF RAMP

"CURVE NO. 1"
P.I. STA. 12+00.63
N=667,184.633
E=1,734,271.272
Δ=15° 56'49" (RT.)
D=4° 00'00"
R=1,432.39
L=398.67
T=200.63

✱✱ : INDICATES EXISTING ELECTRICAL MANHOLE ADJACENT TO BENT NO. 1 FOOTING. PRIOR TO COMMENCING EXCAVATION, THE CONTRACTOR SHALL CONFIRM LOCATIONS OF EXISTING MANHOLE LIMITS AND CONDUIT ENTERING MANHOLE WITH THE LOCAL UTILITY. EXTREME CAUTION SHALL BE EXERCISED BY THE CONTRACTOR DURING CONSTRUCTION ACTIVITIES ADJACENT TO THE MANHOLE TO ASSURE THAT THE MANHOLE AND ASSOCIATED CONDUIT REMAIN UNDISTURBED.

PLAN 1 2

SCALE: 1" = 10'

◪ DENOTES: END OF BRIDGE DRAIN REQUIRED. SEE STD. DWG NOS. STD-1-6, STD-1-7 AND STD-1-9.

◭ DENOTES: POINT OF MINIMUM VERTICAL CLEARANCE.

◒ DENOTES: RAMP SHOULDER WIDTH VARIES FROM 12'-0" AT STA. 10+00.00 TO 10'-0" AT STA. 11+05.52.

☆ DENOTES: 4" THICK CONCRETE SLOPE PAVEMENT. SEE GENERAL NOTES ON M-427-69 FOR CONSTRUCTION REQUIREMENTS AND LIMITS.

NOTE: SEE STD. DWG. NO. STD-8-2, FOR LIGHT STANDARD SUPPORT DETAILS.

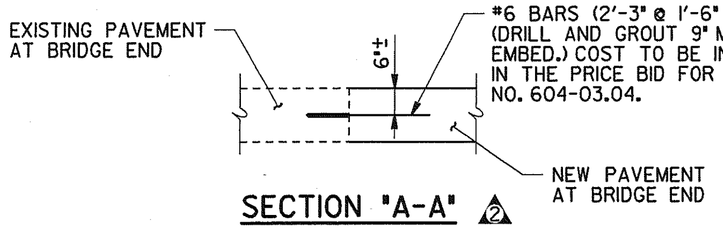

SECTION "A-A" 2

DESIGNED BY	W. PETRONE	DATE	12/01
DRAWN BY	LITTRELL, WILSON	DATE	12/01
SUPERVISED BY	PETRONE	DATE	12/01
CHECKED BY	WILSON, PETRONE	DATE	12/01

STATE OF TENNESSEE
DEPARTMENT OF TRANSPORTATION

PLAN OF BRIDGE NO. 3
WIDENING OF INTERSTATE 40
OVER
JO JOHNSON STREET
STATION 121+09.40 (LOG MI. 16.88)
BRIDGE ID. NO. 19I00400065 (RT. LN.)
DAVIDSON COUNTY
2002

M-427-68

TWilson 1/21/02 Not Copied Not Located \\BRNOV27620.583849.8384\pin.TWilson.pr-f

GENERAL NOTES

SPECIFICATIONS: STANDARD ROAD AND BRIDGE SPECIFICATIONS OF THE TENNESSEE DEPARTMENT OF TRANSPORTATION (MARCH 1, 1995 EDITION).

LOADING: HS20-44 WITH ALTERNATE MILITARY.

DESIGN SPECIFICATIONS: AASHTO 1996 EDITION WITH ADDENDA INCLUDING THE STANDARD SPECIFICATIONS FOR SEISMIC DESIGN OF HIGHWAY BRIDGES. SEISMIC PERFORMANCE CATEGORY "A" WITH ACCELERATION COEFFICIENT 0.075.

CONCRETE: EXCEPT WHERE NOTED OTHERWISE, TO BE CLASS "A" (CAST IN PLACE). f'c=3,000 PSI.
(2) CLASS "D" CONCRETE FOR BRIDGE DECKS SHALL BE IN ACCORDANCE WITH SECTION 604 OF THE STANDARD SPECIFICATIONS.

BRIDGE RAIL SYSTEM: BUILD BRIDGE RAILINGS ACCORDING TO STANDARD DRAWING STD-1-1, EXCEPT AS MODIFIED IN DETAIL ON DWG. NO. M-427-72.

BRIDGE DECK SURFACE FINISH: TO BE IN ACCORDANCE WITH METHOD (A) IN ARTICLE 604.23 OF THE STANDARD SPECIFICATIONS.

SHOP DRAWINGS: SEE SPECIAL PROVISION NO. 105A.

REINFORCING STEEL: SHALL BE ASTM A615 GRADE 60 UNLESS NOTED OTHERWISE. SEE SECTION 604 AND 907 OF THE STANDARD SPECIFICATIONS.

NOTE: ALL FILL SHALL BE IN PLACE PRIOR TO EXCAVATING FOR BENT FOOTINGS. AFTER CONSTRUCTING THE BENT, EXTREME CARE SHALL BE TAKEN NOT TO DAMAGE OR MISALIGN THE BENT.

NOTE: THE CONTRACTOR SHALL CHECK THE LOCATION OF ALL EXISTING SUBSTRUCTURES AND VERIFY SPAN LENGTHS BEFORE FABRICATING GIRDERS.

(2) HIGH EARLY STRENGTH CONCRETE: TRAFFIC SHALL NOT BE PERMITTED ON ANY REPAIR AREA UNTIL TEST SPECIMENS ATTAIN A COMPRESSIVE STRENGTH OF 3,000 PSI AND THE CONCRETE HAS BEEN IN PLACE A MINIMUM OF EIGHTEEN (18) HOURS. THE CONCRETE SHALL ATTAIN A MINIMUM COMPRESSIVE STRENGTH OF f'c=3,000 PSI IN 18 HOURS.

(2) SPECIAL NOTE TO CONTRACTOR CONCERNING HIGH EARLY CONCRETE: CONCRETE FOR JOINT SYSTEM REPAIRS SHALL BE HIGH EARLY STRENGTH CONCRETE WITH A COMPRESSIVE STRENGTH OF f'c=3000 PSI AT 18 HOURS. THE CONTRACTOR SHALL PROVIDE PROOF PRIOR TO BEGINNING WORK THAT THE PROPOSED CONCRETE MIX WILL OBTAIN THE REQUIRED PROPERTIES, PROOF SHALL BE PROVIDED BY AN INDEPENDENT TESTING COMPANY AND SUBMITTED TO THE MATERIALS AND TEST DIVISION OF THE TENNESSEE DEPARTMENT OF TRANSPORTATION FOR APPROVAL.

BRIDGE DECK FORMS: BRIDGE DECK FORMS FOR CONCRETE DECKS SHALL BE CONSTRUCTED USING EITHER REMOVABLE FORMS OR PERMANENT FORMS. PERMANENT FORMS MAY BE EITHER REMAIN-IN-PLACE STEEL OR PRECAST, PRESTRESSED CONCRETE PANELS. IN EITHER CASE, FORMS SHALL BE ATTACHED BY MEANS OTHER THAN WELDING TO MAIN STRUCTURAL MEMBERS OR REINFORCING STEEL.
TEMPORARY ERECTION DIAPHRAGMS MUST BE USED AT THE ENDS OF PRECAST CONCRETE GIRDERS WHERE END DIAPHRAGMS, SUPPORT DIAPHRAGMS, OR ABUTMENT BACKWALLS ARE TO BE POURED CONCURRENTLY WITH THE DECK AND SHALL BE PROVIDED ELSEWHERE IN ACCORDANCE WITH THE SPECIFICATIONS TO PREVENT GIRDER ROTATION. SEE STANDARD DRAWINGS STD-4-1, STD-4-2, STD-4-3, STD-4-4, STD-14-3 AND ARTICLE 604.05 OF THE STANDARD SPECIFICATIONS.

PILES: TO BE HP12x53 DRIVEN TO REFUSAL ON ROCK OR A MINIMUM BEARING OF 50 TONS FOR THE ABUTMENTS.

SPECIAL NOTE - FOOTING FOR BENTS: AFTER EXCAVATION TO ROCK FOR FOOTING HAS BEEN COMPLETED, HOLES 6' DEEP SHALL BE DRILLED AT POINTS DESIGNATED BY THE ENGINEER. FROM THE RESULTS OBTAINED, THE ENGINEER SHALL DETERMINE THE FINAL FOOTING ELEVATIONS. NO REINFORCING STEEL FOR BENT COLUMNS SHALL BE ORDERED UNTIL FINAL FOOTING ELEVATIONS HAVE BEEN DETERMINED.

NOTE: THE CONTRACTOR SHALL SAW CUT 1 INCH DEEP INTO THE SLAB BEFORE REMOVING CONCRETE. ALL TRANSVERSE REINFORCING STEEL SHALL REMAIN IN PLACE AND BE SPLICED WITH THE NEW REINFORCING. THE CONTRACTOR SHALL NOT USE A HYDRAULIC RAM MOUNTED ON A BACKHOE (COMMOMLY CALLED A HOE RAM) OR OTHER SIMILAR HEAVY EQUIPMENT FOR CONCRETE REMOVAL. THE MAXIMUM ALLOWABLE HAMMER SIZE IS THE 60 POUND CLASS.

GROUTED BARS IN DRILLED HOLES: HORIZONTALLY DRILLED HOLES SHALL BE DRILLED 1/2" IN DIAMETER LARGER THAN THE BAR, CLEANED, PACKED WITH NON-SHRINK GROUT AND THE BAR ROTATED (NOT DRIVEN) TO ITS SEAT. VERTICALLY DRILLED HOLES SHALL BE DRILLED 1/4" IN DIAMETER LARGER THAN THE BAR, CLEANED, PACKED WITH EPOXY GROUT AND THE BAR SHALL BE DRIVEN TO ITS SEAT. ALL GROUTING MATERIAL SHALL BE APPROVED BY T.D.O.T. MATERIALS AND TESTS.

PILE TIP REINFORCEMENT: PILES SHALL BE EQUIPED WITH CAST STEEL POINTS. ALSO, SEE STANDARD DRAWING STD-5-1 FOR FURTHER NOTES.

SPECIAL NOTE FOR UTILITIES: IT IS INTENDED THAT THE COST OF MATERIALS AND LABOR NECESSARY FOR THE COMPLETE INSTALLATION OF UTILITIES SHALL BE BORNE BY OTHERS AND SHALL NOT BE PAID FOR AS A PART OF THIS CONTRACT. THE CONTRACTOR SHALL COOPERATE WITH OTHERS IN THE INSTALLATION OF UTILITIES WITH NO ADDITIONAL COMPENSATION ALLOWED THE CONTRACTOR AS A RESULT.

VALUE ENGINEERING ALTERNATE BRIDGE DESIGN CRITERIA: ALTERNATE BRIDGE DESIGN PROPOSALS MAY NOT DIMINISH THE FUNCTIONAL OR STRUCTURAL EQUIVALENCY OF THE BRIDGE AND MUST MEET OR EXCEED BOTH THE SERVICE LEVEL AND ULTIMATE CAPACITIES OF THE CONTRACT PLANS STRUCTURE. ADDITIONALLY, THE HORIZONTAL CLEARANCES MAY NOT BE REDUCED, NOR MAY THE VERTICAL CLEARANCES BE LESS THAN THE MINIMUM ACCEPTABLE FOR THE TYPE FACILITY CROSSED.

NOTE: PAVE SLOPES AND EXPOSED EARTH UNDER BRIDGES WITH 4" THICK CEMENT CONCRETE SLAB REINFORCED WITH NO. 4 GAGE WIRE FABRIC @ 6" CENTERS AND 58 LB. PER 100 S.F. THE WIRE FABRIC REINFORCEMENT SHALL BE PLACED AT ONE-HALF THE DEPTH OF THE SLAB AND EXTEND TO WITHIN 3" OF ITS EDGE WITH A 12" LAP REQUIRED ON ALL SHEETS. THE COST OF THE WIRE FABRIC REINFORCEMENT TO BE INCLUDED IN THE UNIT PRICE BID FOR ITEM 709-04, REINFORCED CONCRETE SLOPE PAVEMENT. ONE-HALF INCH PREMOULDED EXPANSION JOINTS WITHOUT LOAD TRANSFERS SHALL BE FORMED ABOUT ALL STRUCTURES AND FEATURES PROJECTING THROUGH, IN OR AGAINST THE SLAB. THE SLAB SHALL BE GROOVED PARALLEL WITH AND AT RIGHT ANGLES TO THE UNDER ROADWAY CENTER LINE AT 6' CENTERS. DEPTH OF GROOVE TO BE NOT LESS THAN 1". SEE STANDARD DRAWING RD-SA-1 FOR LIMITS OF SLOPE PROTECTION.

CONCRETE SEALER: CONCRETE SEALER SHALL BE APPLIED TO SUBSTRUCTURES COINCIDING WITH EXPANSION JOINT LOCATIONS BEFORE PLACEMENT OF BEARING DEVICES AND APPLYING TEXTURE COATING. CONCRETE SEALER SHALL BE APPLIED TO THE FRONT VERTICAL FACE OF THE ABUTMENT BACKWALL, THE FRONT AND TOP OF THE ABUTMENT BEAM (PLUS CURTAIN WALLS, SUMP WALLS OR ANY OTHER FACES THAT ARE DEEMED NECESSARY BY THE ENGINEER). CONCRETE SHALL BE CLEAN AND DRY BEFORE APPLYING THE CONCRETE SEAL AND THE THICKNESS OF THE SEAL SHALL BE AS RECOMMENDED BY THE SEALANT MANUFACTURER. ACCEPTABLE CONCRETE SEALERS ARE INCLUDED IN THE QUALIFIED PRODUCTS LIST FOR NON-PENETRATING CONCRETE SEALS MAINTAINED BY THE DIVISION OF MATERIALS AND TESTS. THE SEALER SHALL BE CLEAR OR SIMILAR TO THE COLOR OF EXISTING CONCRETE SURFACES TO BE SEALED. THE COST OF THE SEALER, COMPLETE AND IN PLACE, SHALL BE INCLUDED IN THE UNIT PRICE OF THE EXPANSION JOINT REPAIRS AT EACH ABUTMENT.

CONST. NO. 19005-3153-44

PROJECT NO.	YEAR	SHEET NO.
IM-40-4(73)206	2002	

REVISIONS

NO.	DATE	BY	BRIEF DESCRIPTION
1	1-21-02	W.A.P.	REV. JOINT SYSTEM DETAILS AND NOTE.
2	3-11-02	W.A.P.	HIGH EARLY, 18 HOUR CONC. @ JOINT.

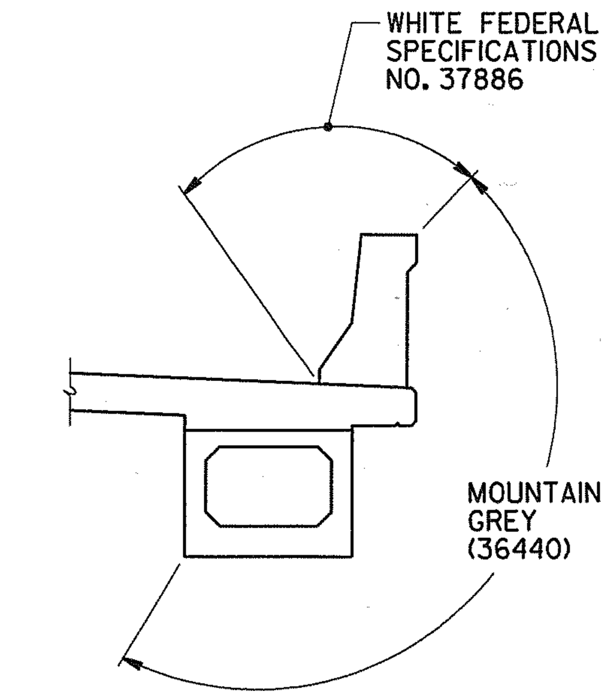

APPLIED TEXTURE FINISH DETAIL

FINISHING CONCRETE SURFACES: CONCRETE FINISHING SHALL BE IN ACCORDANCE WITH SECTION 604.22 OF THE TENNESSEE STANDARD SPECIFICATION. A CLASS I FINISH FOLLOWED BY AN APPLIED TEXTURE FINISH SHALL BE USED IN LIEU OF A CLASS II FINISH. NO TEXTURE FINISH SHALL BE APPLIED PRIOR TO COMPLETION OF PAVING AND HAULING OPERATIONS AT THE BRIDGE SITE. THE APPLIED TEXTURE FINISH SHALL BE MEASURED AND PAID FOR UNDER ITEM NOS. 604-04.01 AND 604-04.02.

IN ADDITION TO THE ABOVE REQUIREMENTS MOUNTAIN GREY (36440) SHALL BE USED ON ALL EXPOSED ABUTMENT AND BENT SURFACES.

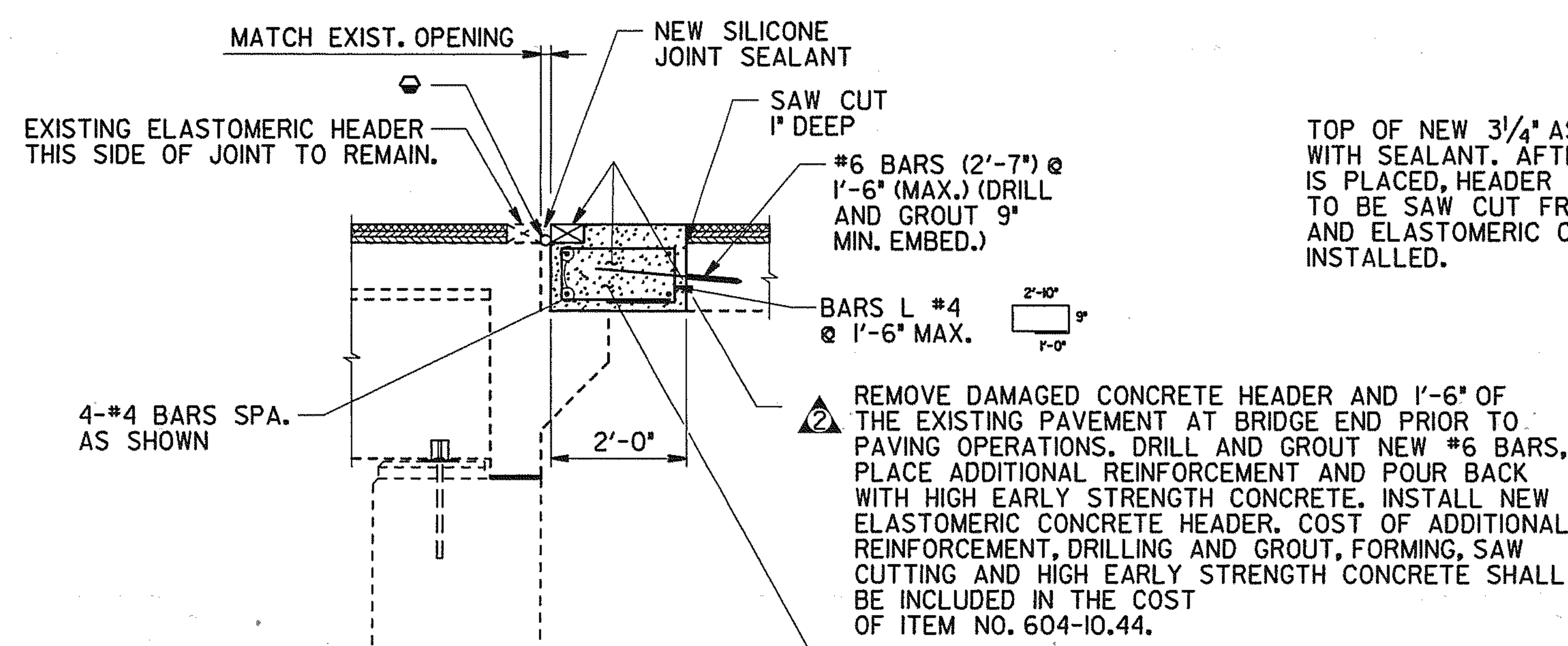

(2) REMOVE DAMAGED CONCRETE HEADER AND 1'-6" OF THE EXISTING PAVEMENT AT BRIDGE END PRIOR TO PAVING OPERATIONS. DRILL AND GROUT NEW #6 BARS, PLACE ADDITIONAL REINFORCEMENT AND POUR BACK WITH HIGH EARLY STRENGTH CONCRETE. INSTALL NEW ELASTOMERIC CONCRETE HEADER. COST OF ADDITIONAL REINFORCEMENT, DRILLING AND GROUT, FORMING, SAW CUTTING AND HIGH EARLY STRENGTH CONCRETE SHALL BE INCLUDED IN THE COST OF ITEM NO. 604-10.44.

(2) CONCRETE FOR BRIDGE JOINT SYSEM REPAIR TO BE HIGH EARLY STRENGTH CONCRETE, f'c=3,000 PSI @ 18 HOURS. SEE "SPECIAL NOTE TO CONTRACTOR CONCERNING HIGH EARLY STRENGTH CONCRETE" UNDER GENERAL NOTES.

BRIDGE JOINT SYSTEM REPAIR (1)

(REQUIRED AT REMAINING PORTION OF ABUTMENT NO. 2 E.B.L. UP TO FACE OF MEDIAN BARRIER.)

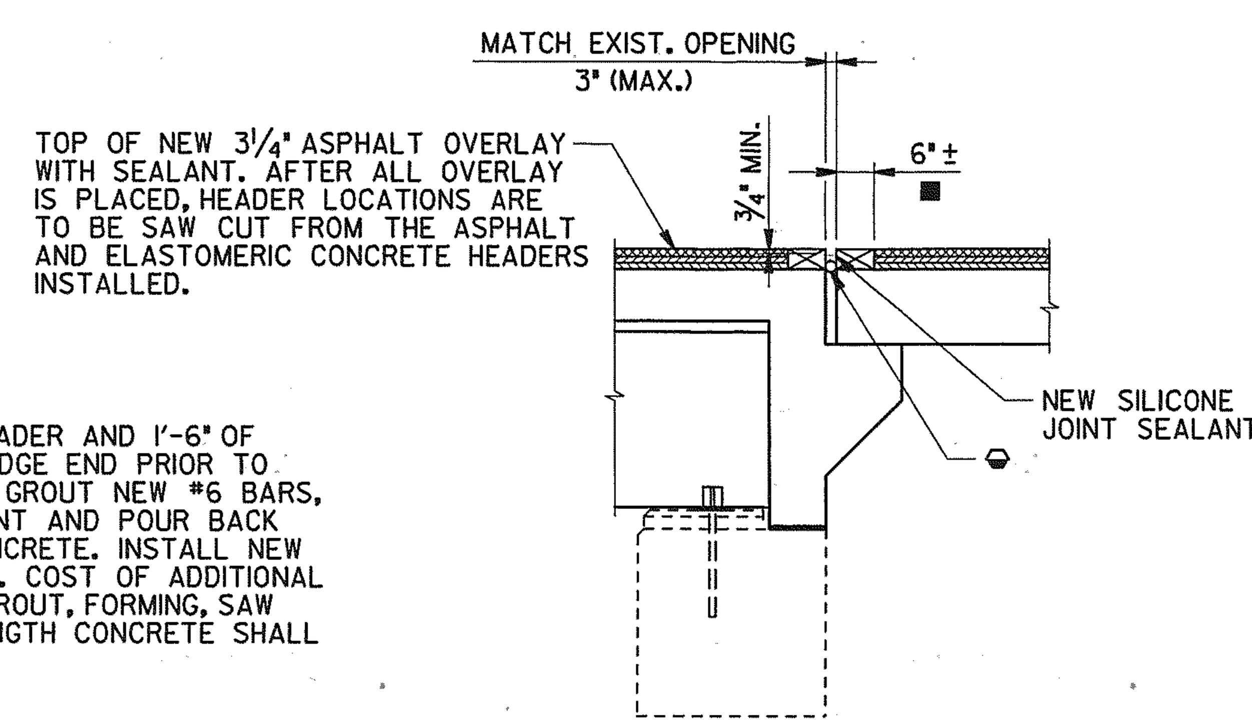

BRIDGE JOINT SYSTEM (1)

(NEW CONSTRUCTION AT ABUTMENT NO. 1)

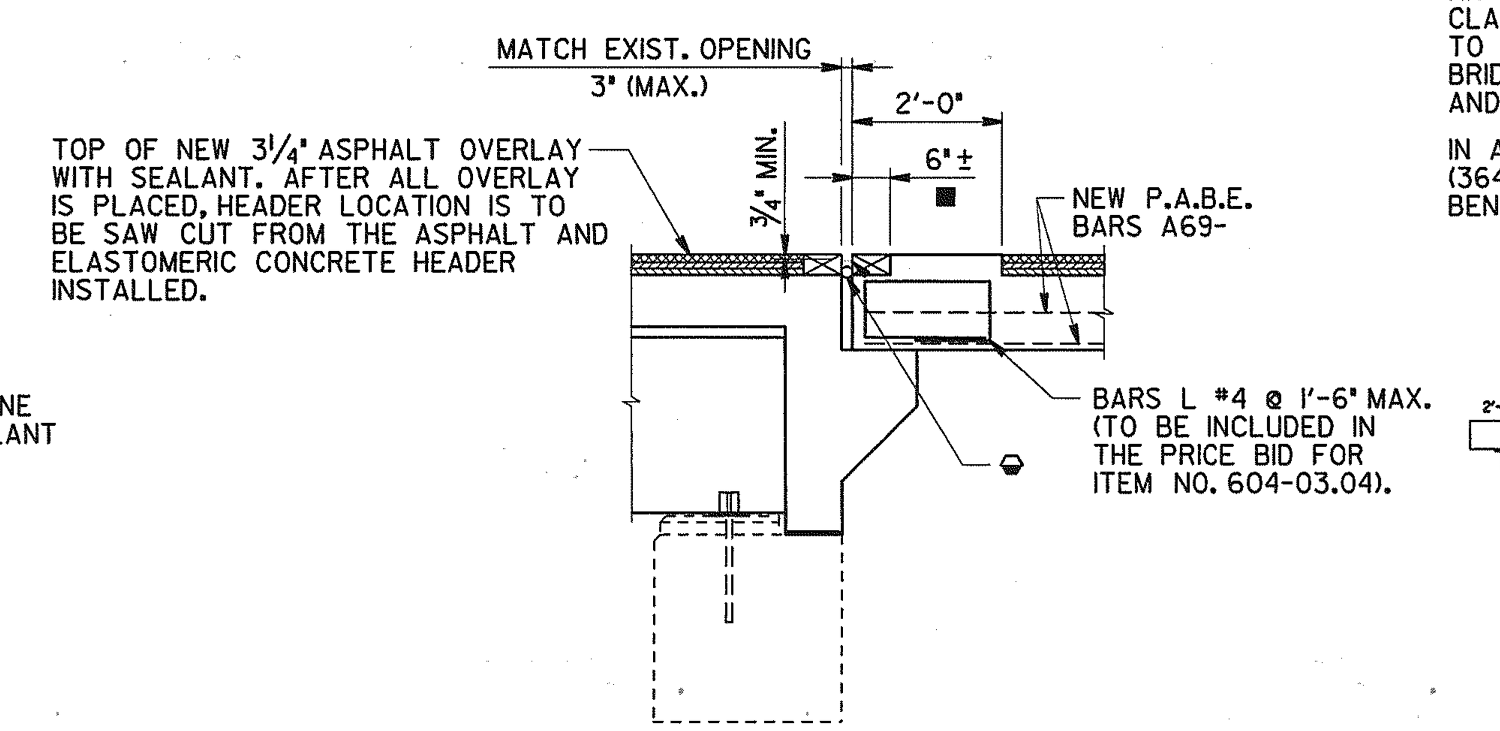

BRIDGE JOINT SYSTEM (1)

(NEW CONSTRUCTION AT ABUTMENT NO. 2)

⬡ DENOTES: THE MOVEMENT GAP SHALL BE FILLED WITH A BACKER ROD OF SUITABLE DIAMETER. THE ROD SHALL BE PLACED AT A DEPTH TO ENSURE THE CORRECT WIDTH/DEPTH RATIO OF THE NEW BRIDGE JOINT SEALANT. BACKER ROD AND SILICONE SHALL BE AS PER THE SEALANT MANUFACTURER.

NOTE: SEE SECTIONS 617 AND 906.04 OF THE TENNESSEE STANDARD SPECIFICATIONS FOR ROAD AND BRIDGE CONSTRUCTION.

■ DENOTES: NEW ELASTOMERIC CONCRETE HEADER REQUIRED AT EACH SIDE OF JOINT. ACTUAL IN-PLACE HEADER WIDTH TO MATCH EXISTING.

(1) NOTE: COST OF ALL LABOR AND MATERIALS NECESSARY TO INSTALL NEW EXPANSION JOINT AND REPAIR OF EXISTING JOINT AT END OF BRIDGE, INCLUDING CONCRETE HEADER, BACKER ROD, JOINT SEALANT, SAW CUTTING, REINFORCEMENT, DRILLING AND GROUT, CLASS "A" CONCRETE AND ANY MISCELLANEOUS MATERIALS TO BE INCLUDED IN THE PRICE BID FOR ITEM NO. 604-10.44, EXPANSION JOINT REPAIRS, L.F.

NOTE: BRIDGE DECK SEALANT MEMBRANE, TDOT ITEM NO. 617-01 TO BE PLACED ON BRIDGE DECK SIDE OF JOINT ONLY.

BRIDGE JOINT SYSTEM NOTES

THE ELASTOMERIC BRIDGE JOINT SYSTEM UTILIZED SHALL BE ON THE TDOT QUALIFIED PRODUCTS LIST (QPL), LIST NO. 9 PART B. THE JOINT SYSTEM SHALL BE INSTALLED IN ACCORDANCE WITH THE MANUFACTURE'S INSTRUCTIONS UNDER THE DIRECT SUPERVISION OF AN AUTHORIZED TECHNICIAN PROVIDED BY THE EXPANSION JOINT SUPPLIER. FOR EACH JOINT CONSTRUCTED, THE TECHNICIAN SHALL APPROVE OF ALL ASPECTS OF GEOMETRY, JOINT PREPARATION AND INSTALLATION INCLUDING ANY NECESSARY GRINDING OR GROOVING OR OTHER SURFACE PREPARATION REQUIRED PRIOR TO INSTALLATION OF JOINT MATERIALS.

DESIGNED BY W. PETRONE DATE 12/01
DRAWN BY t. wilson DATE 12/01
SUPERVISED BY PETRONE DATE 12/01
CHECKED BY WILSON, PETRONE DATE 12/01

WINFORD A. PETRONE — ENGINEER — NO. 13,774 — STATE OF TENNESSEE — 3/11/02

STATE OF TENNESSEE
DEPARTMENT OF TRANSPORTATION

GENERAL NOTES
WIDENING OF INTERSTATE 40
OVER
JO JOHNSON STREET
STATION 121+09.40 (LOG MI. 16.88)
BRIDGE ID. NO. 19I00400065 (RT. LN.)
DAVIDSON COUNTY
2002

M-427-69

dystarnes
3/11/02
4:58:54
Plot 1 copies :
D:\LOCAL\FULL\BOND\3160I_I58349_8384Pnts_dystarnes.prf

CONST. NO. 19005-3153-44

PROJECT NO.	YEAR	SHEET NO.
IM-40-4(73)206	2002	

REVISIONS

NO.	DATE	BY	BRIEF DESCRIPTION
1	1-21-02	W.A.P.	REV. NOTE 14

ESTIMATED QUANTITIES

ITEM NO.	202-04.03	204-02.01	204-04.01	204-05	303-01.02	604-02.03	604-03.01	604-03.02	604-03.04	604-03.09	604-04.01	604-04.02
ITEM	REMOVAL OF STRUCTURES (BRIDGE NO. 3) (STA. 121+09.40)	DRY EXCAVATION (BRIDGES)	ROCK EXCAVATION (BRIDGES)	ROCK DRILLING (BRIDGES)	GRANULAR BACKFILL (BRIDGES)	EPOXY COATED REINFORCING STEEL	CLASS "A" CONCRETE (BRIDGES)	STEEL BAR REINFORCEMENT (BRIDGES)	PAVEMENT AT BRIDGE ENDS	CLASS "D" CONCRETE (BRIDGE DECK)	APPLIED TEXTURE FINISH (NEW STRUCTURES)	APPLIED TEXTURE FINISH (EXIST. STRUCTURES)
	L.S. (4)	C.Y. (1)	C.Y. (1)	L.F.	TON (3)	LBS.	C.Y. (7)	LBS.	S.Y. (5)	C.Y.	S.Y.	S.Y.
SUPERSTRUCTURE						12,268	4	527		46		
ABUTMENT NO. 1		5				58	7	1,056				
BENT NO. 1		19	3	12			12	2,009				
BENT NO. 2		22	2	12			11	1,917				
ABUTMENT NO. 2		5				58	7	1,070				
TOTAL	1	51	5	24	7	12,384	41	6,579	65	46	388	829

ESTIMATED QUANTITIES (CONT'D.)

ITEM NO.	604-10.44	606-03.03	606-03.06	615-02.04	617-02	617-05	620-03.10	709-04	710-09.01	710-09.02	714-01.03
ITEM	EXPANSION JOINT REPAIRS	STEEL PILES (12 INCH)	PILE TIPS (STEEL PILES, 12 INCH)	PRESTRESSED CONCRETE BOX BEAM (27"x36")	BRIDGE DECK CRACK SEALING	SEALANT (HMWM)	CONCRETE PARAPET (STD-1-1) (MODIFIED)	REINFORCED CONCRETE SLOPE PAVEMENT	6" PERF. PIPE WITH VERTICAL DRAIN SYSTEM	6" PIPE UNDERDRAIN	STRUCTURAL LIGHTING (BRIDGE NO. 3)
	(13) L.F. (14)	L.F.	EACH (11)	L.F. (10)	L.F. (8)	GAL. (9)	L.F.	C.Y.	L.F. (2)	L.F.	L.S. (12)
SUPERSTRUCTURE											
ABUTMENT NO. 1	13	67	3						14	13	
BENT NO. 1											
BENT NO. 2											
ABUTMENT NO. 2	72	58	3						16	13	
TOTAL	85	125	6	174	202	3	202	20	30	26	1

FOOTNOTES

(1) EXCAVATION BASED ON EXISTING GROUND.

(2) COST OF POLYETHYLENE SHEETING AND ALL MISCELLANEOUS ITEMS NECESSARY FOR INSTALLATION TO BE INCLUDED IN THE UNIT PRICE BID FOR PERFORATED PIPE.

(3) GRANULAR BACKFILL SHALL BE CLASS "A" GRADING "D" MATERIAL. SEE STANDARD DRAWING STD-10-1.

(4) THE COST OF REMOVING THE EXTERIOR PORTION OF THE EXISTING SLAB, PORTIONS OF THE EXISTING ABUTMENT AND THE BRIDGERAIL SHALL BE INCLUDED IN THE UNIT PRICE BID FOR ITEM 202-04.03.

(5) PRIOR TO CONSTRUCTION OF THE PAVEMENT AT BRIDGE ENDS, THE CONTRACTOR SHALL SUBMIT A PROPOSED BILL OF STEEL TO THE ENGINEER FOR APPROVAL. IN ADDITION PRICE BID SHALL INCLUDE THE COST OF ONE (1) END OF BRIDGE DRAIN.

(6) THE COST OF BITUMINOUS-FIBERBOARD, AND ALL MISCELLANEOUS JOINT MATERIAL TO BE INCLUDED IN THE UNIT PRICE BID FOR OTHER ITEMS.

(7) THE COST OF ALL MATERIALS AND LABOR NECESSARY FOR THE INSTALLATION OF 6 ANCHOR BOLT ASSEMBLIES AT BENTS SHALL BE INCLUDED IN THE UNIT PRICE BID FOR ITEM 604-03.01, CLASS "A" CONCRETE (BRIDGES).

(8) INCLUDES ALL COST FOR INSTALLING THE BRIDGE DECK CRACK SEALER (HMWM) INCLUDING CRACK PREPARATION, CLEANING, LABOR, AND ALL MISCELLANEOUS MATERIALS REQUIRED TO SEAL THE LONGITUDINAL CONSTRUCTION JOINT ACCORDING TO SPECIAL PROVISION 604CR AND MANUFACTURERS SPECIFICATIONS. THIS ITEM DOES NOT INCLUDE THE COST OF FURNISHING THE BRIDGE CRACK SEALANT ITSELF.

(9) INCLUDES ALL COST FOR FURNISHING THE SEALER MATERIAL (HMWM) FOR SEALING CRACKS. THE SEALER (HMWM) SHALL BE IN ACCORDANCE WITH SPECIAL PROVISION 604CR.

(10) COST OF ELASTOMERIC PADS AND RUBBER BONDING CEMENT TO BE INCLUDED IN THE UNIT PRICE BID FOR THE PRESTRESSED BEAMS.

(11) THE UNIT PRICE BID FOR THE CAST STEEL POINTS SHALL INCLUDE FURNISHING AND INSTALLATION TO THE PILES.

(12) LUMP SUM FOR STRUCTURAL LIGHTING, ITEM NO. 714-01.03 INCLUDES 350 FT. 2" CONDUIT WITH PULL WIRES, 1 JUNCTION BOX, 2 PULL BOXES, 4-ANCHOR BOLTS AND ALL OTHER NECESSARY MATERIALS FOR INSTALLATION OF STRUCTURAL LIGHTING.

(13) THE PRICE BID FOR EXPANSION JOINT REPAIRS TO INCLUDE THE COST OF 8 S.Y. OF CONCRETE SEALER REQUIRED. SEE GENERAL NOTES FOR DESCRIPTION OF CONCRETE SEALER.

1 (14) INCLUDES INSTALLATION OF NEW JOINT SYSTEM IN WIDENED AREAS OF ABUTMENTS AS WELL AS REPAIR TO EXISTING JOINT SYSTEM AT END OF BRIDGE. CONSTRUCTION TO BE IN ACCORDANCE WITH DETAILS AND NOTES AS SHOWN ON DWG. NO. M-427-69. ALSO INCLUDES COST OF ADDITIONAL REINFORCEMENT, DRILLING AND GROUT, SAW CUTTING AND CLASS "A" CONCRETE.

STATE OF TENNESSEE
DEPARTMENT OF TRANSPORTATION

ESTIMATED QUANTITIES
WIDENING OF INTERSTATE 40
OVER
JO JOHNSON STREET
STATION 121+09.40 (LOG MI. 16.88)
BRIDGE ID. NO. 19I00400065 (RT. LN.)
DAVIDSON COUNTY
2002

M-427-70

DESIGNED BY W. PETRONE DATE 12/01
DRAWN BY T. WILSON DATE 12/01
SUPERVISED BY PETRONE DATE 12/01
CHECKED BY WILSON, PETRONE DATE 12/01

TWilson
12/2/02
09:38
D:\LOCAL\PULL\$WND\27596.583849.83949ent_TWilson.pr1

CONST. NO. 19005-3153-44

PROJECT NO.	YEAR	SHEET NO.
IM-40-4(73)206	2002	

REVISIONS

NO.	DATE	BY	BRIEF DESCRIPTION

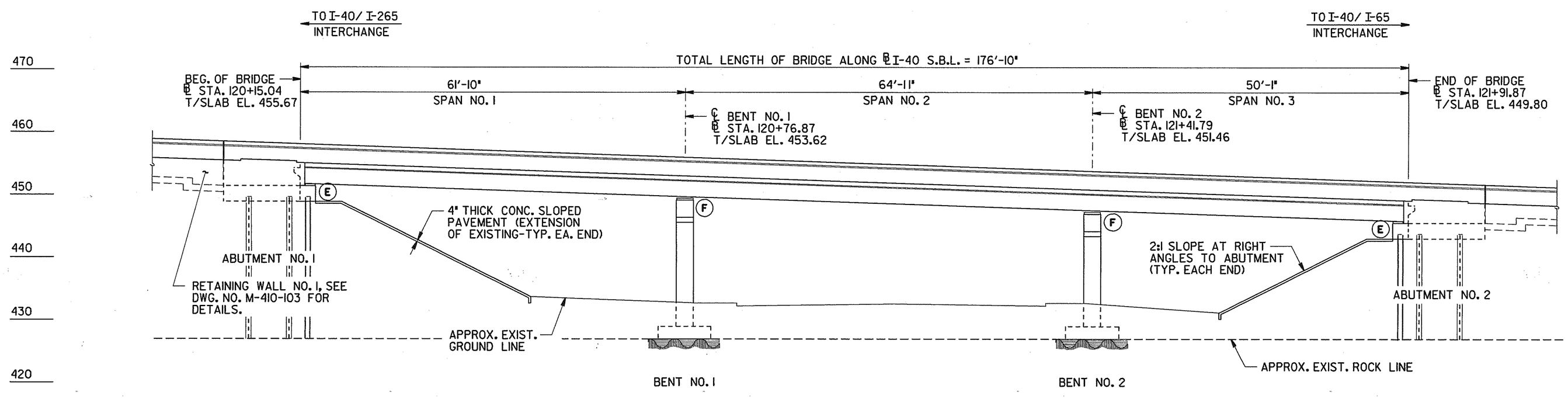

ELEVATION

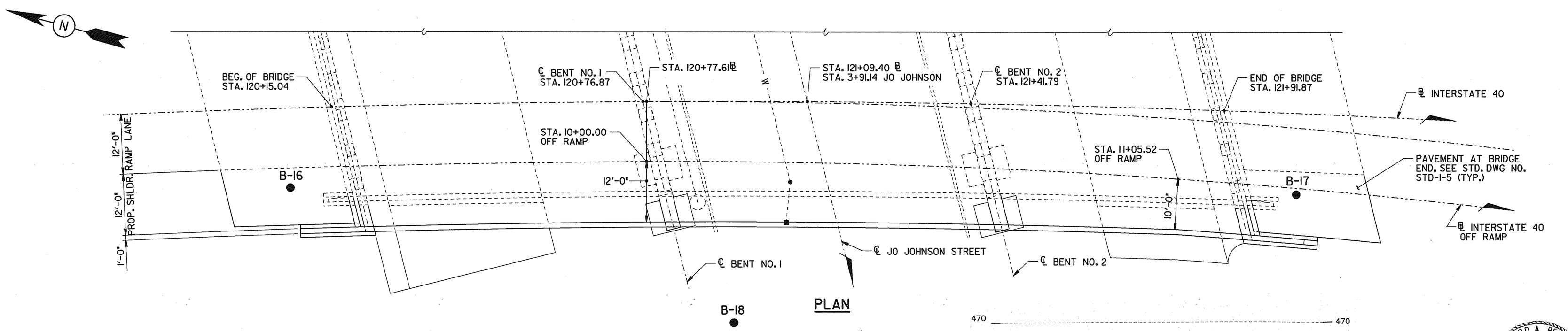

PLAN

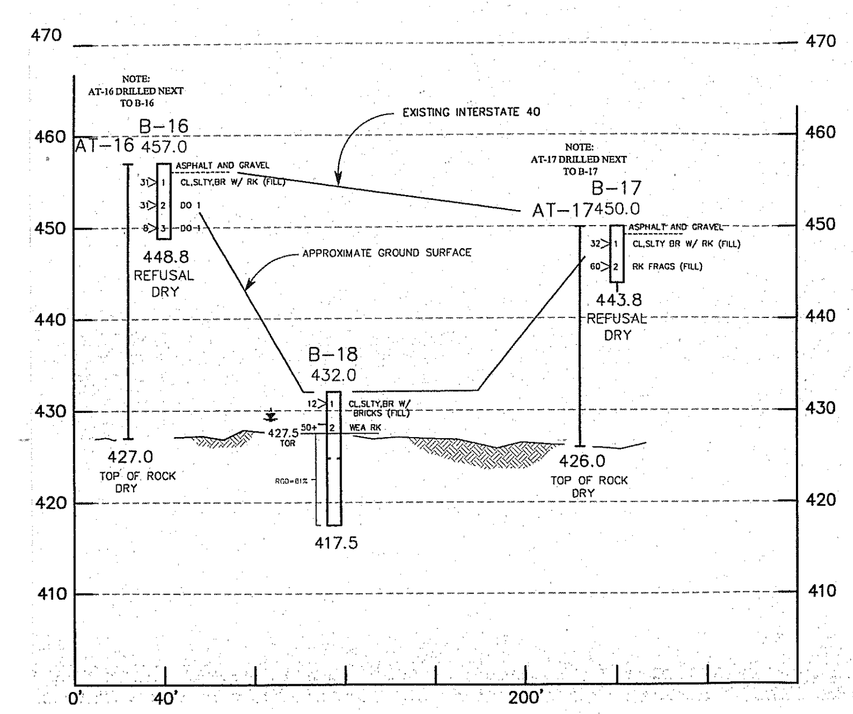

REQUIRED INFORMATION

APPROXIMATE EXISTING GROUND LINE AND ROCK LINE.

SUFFICIENT GROUND AND CORING INFORMATION FOR BRIDGE FOUNDATION.

NOTE

THIS SHEET IS FOR FOUNDATION INVESTIGATION PURPOSE ONLY AND IS NOT TO BE USED FOR FINAL CONSTRUCTION STAKE-OUT PURPOSES.

STATE OF TENNESSEE
DEPARTMENT OF TRANSPORTATION

FOUNDATION DATA
WIDENING OF INTERSTATE 40
OVER
JO JOHNSON STREET
STATION 121+09.40 (LOG MI. 16.88)
BRIDGE ID. NO. 19I00400065 (RT. LN.)
DAVIDSON COUNTY
2002

DESIGNED BY W. PETRONE DATE 12/01
DRAWN BY t. wilson DATE 12/01
SUPERVISED BY PETRONE DATE 12/01
CHECKED BY WILSON, PETRONE DATE 12/01

M-427-71

twilson
12/05/01
08:08:41
Plot: 1copies
D:\LEGALVILL\BRND\24953.553849\553849.23849fnd.twilson.prf

CONST. NO. 19005-3153-44

PROJECT NO.	YEAR	SHEET NO.
IM-40-4(73)206	2002	

REVISIONS

NO.	DATE	BY	BRIEF DESCRIPTION

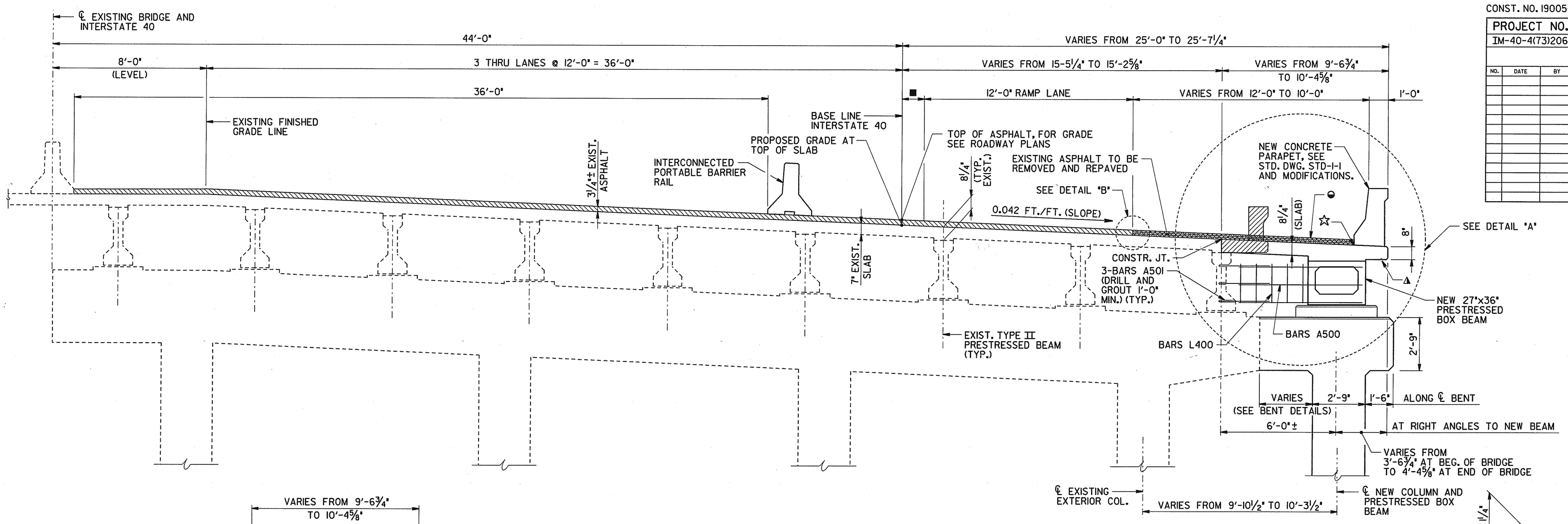

TYPICAL CROSS SECTION

(DIMENSIONS GIVEN AT RIGHT ANGLES TO BASELINE UNLESS NOTED OTHERWISE)

SCALE: ⅜" = 1'-0"

DENOTES: AREA OF EXISTING STRUCTURE TO BE REMOVED.

▲ DENOTES: 1" TRIANGULAR NOTCH DRIP BEAD TO RUN FULL LENGTH OF SLAB. (TYP.)

☆ DENOTES: CONTRACTOR TO SEAL LONGITUDINAL DECK CRACK WITH (HMWM) CRACK SEALANT.

◒ DENOTES: FOR NEW ASPHALT ON TOP OF NEW 8¼" SLAB, SEE DETAIL "B" AND ROADWAY PLANS FOR BRIDGE DECK ASPHALT OVERLAY DETAIL.

■ DENOTES: GORE WIDTH VARIES FROM 0'-0" @ STA. 120+77.61 TO 2'-4 1/16" @ STA. 121+91.67.

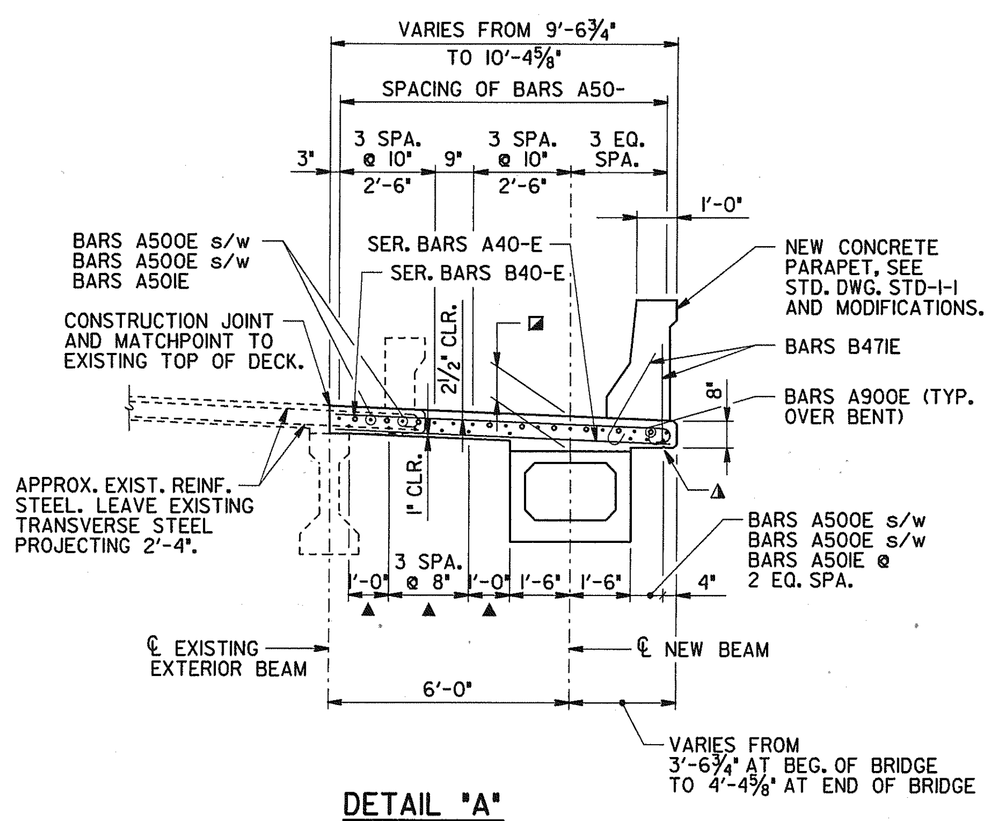

DETAIL "A"

(SHOWN PRIOR TO APPLICATION OF ASPHALT OVERLAY)

▲ DENOTES: BARS A500E s/w BARS A500E s/w BARS A501E.

◪ DENOTES: 10" FROM TOP OF SLAB TO TOP OF BEAM AT ℄ BEARING.

NOTE: WHEN POURING SLAB, PROVISIONS SHALL BE MADE FOR SETTING REINFORCING STEEL FOR PARAPET. THE PARAPET SHALL NOT BE POURED UNTIL THE SLAB IS POURED AND CURED. ALSO SEE DRAWING NO. STD-1-1.

NOTE: PROVISIONS SHALL BE MADE DURING SLAB REMOVAL TO PROTECT THE EXISTING TRANSVERSE REINFORCEMENT FROM DAMAGE. THE EXISTING REINFORCING STEEL SHALL BE COMPLETELY CLEANED, REALIGNED AND INCORPORATED INTO THE NEW SLAB CONSTRUCTION.

NOTE: TRANSVERSE TOP OF SLAB REINFORCING BARS DAMAGED BY THE CONTRACTOR DURING SLAB REMOVAL SHALL BE REPLACED BY DRILLING AND GROUTING A NEW 3'-4" EPOXY BAR 1'-0" INTO EXISTING SLAB AND AT 2½" FROM TOP OF SLAB.

NOTE: SUPPORT DIAPHRAGMS SHALL BE POURED CONCURRENTLY WITH THE DECK SLAB AND INCLUDED IN THE QUANTITY FOR ITEM NO. 604-03.09.

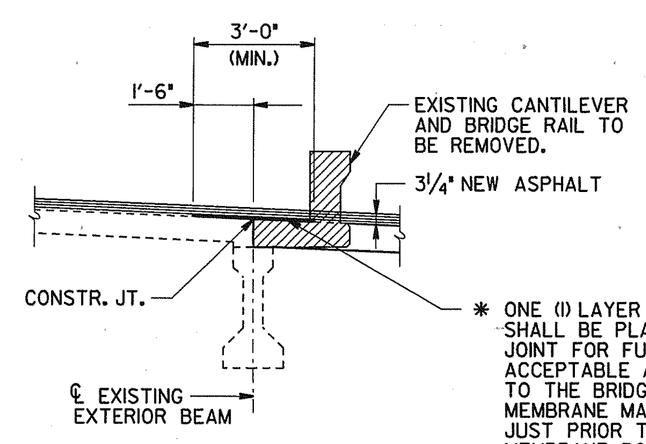

DECK SEALANT DETAIL

✱ DENOTES: SEE SECTIONS 617 AND 906.04 OF THE TENNESSEE STANDARD SPECIFICATIONS FOR ROAD AND BRIDGE CONSTRUCTION.

✱ ONE (1) LAYER OF BRIDGE DECK SEALANT MEMBRANE SHALL BE PLACED ACROSS THE SLAB CONSTRUCTION JOINT FOR FULL LENGTH OF BRIDGE. A BONDCOAT OF ACCEPTABLE ADHESIVE SHALL BE APPLIED DIRECTLY TO THE BRIDGE DECK IN ACCORDANCE WITH THE MEMBRANE MANUFACTURER'S RECOMMENDATIONS JUST PRIOR TO PLACING THE MEMBRANE. COST OF MEMBRANE, BONDING ADHESIVE AND ALL OTHER MATERIALS, EQUIPMENT AND LABOR NECESSARY FOR INSTALLATION AS SHOWN SHALL BE INCLUDED UNDER ITEM NO. 617-01, BRIDGE DECK SEALANT.

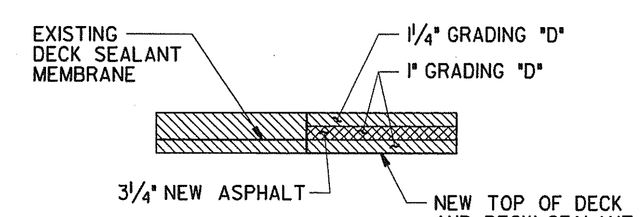

DETAIL "B"

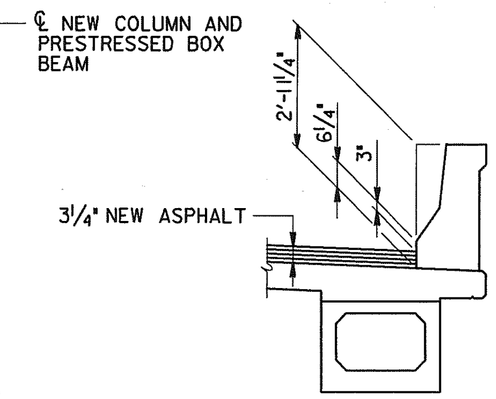

MODIFICATION TO PARAPET HEIGHT

NOTE: FOR DIMENSIONS AND DETAILS NOT SHOWN, SEE DWG. STD-1-1. ADD 3" TO ALL VERTICAL BAR LENGTHS.

ESTIMATED QUANTITIES

CLASS "D" CONCRETE (BRIDGE DECK) C.Y.	CLASS "A" CONCRETE (BRIDGES) C.Y.	REINFORCING STEEL LBS.	EPOXY COATED REINFORCING STEEL LBS.
46	4	527	12,268

WINFORD A. PETRONE — REGISTERED ENGINEER — AGRICULTURE — NO. 13,774 — STATE OF TENNESSEE — 12/13/01

STATE OF TENNESSEE
DEPARTMENT OF TRANSPORTATION

SUPERSTRUCTURE
WIDENING OF INTERSTATE 40
OVER
JO JOHNSON STREET
STATION 121+09.40 (LOG MI. 16.88)
BRIDGE ID. NO. 19I00400065 (RT. LN.)
DAVIDSON COUNTY
2002

DESIGNED BY W. PETRONE DATE 12/01
DRAWN BY T. WILSON DATE 12/01
SUPERVISED BY PETRONE DATE 12/01
CHECKED BY WILSON, PETRONE DATE 12/01

twilson
12/13/01
13:59
Plot scale:1
Plot device: DWG to PDF.pc3
P:\LOCAL\TEL\BRIDGE\24953\583849\83849str.e.twilson.dwg

M-427-72

CONST. NO. 19005-3153-44

PROJECT NO.	YEAR	SHEET NO.
IM-40-4(73)206	2002	

REVISIONS

NO.	DATE	BY	BRIEF DESCRIPTION

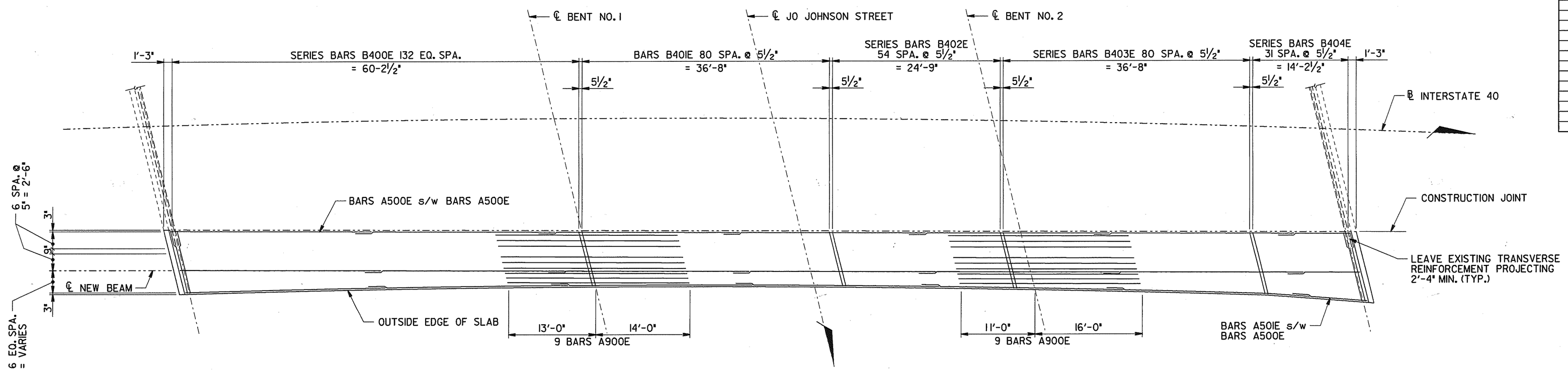

SLAB PLAN

(TOP OF SLAB)

NOTE: MIN. LAP NO. 5 BARS = 2'-7"

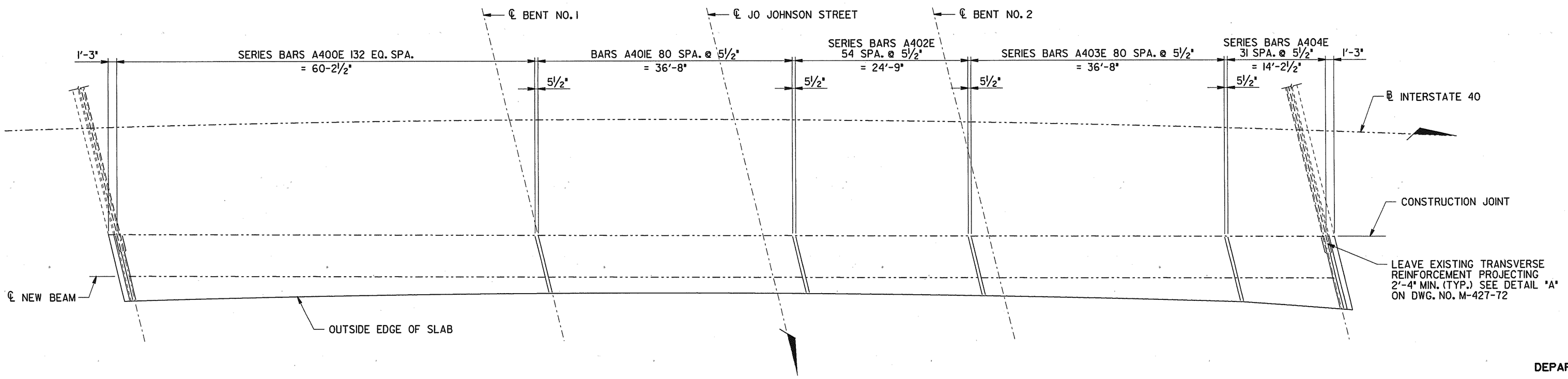

SLAB PLAN

(SHOWING TRANSVERSE REINFORCEMENT BOTTOM OF SLAB)

STATE OF TENNESSEE
DEPARTMENT OF TRANSPORTATION

SUPERSTRUCTURE DETAILS
WIDENING OF INTERSTATE 40
OVER
JO JOHNSON STREET
STATION 121+09.40 (LOG MI. 16.88)
BRIDGE ID. NO. 19I00400065 (RT. LN.)
DAVIDSON COUNTY
2002

M-427-73

DESIGNED BY	W. PETRONE	DATE	12/01
DRAWN BY	t. wilson	DATE	12/01
SUPERVISED BY	PETRONE	DATE	12/01
CHECKED BY	WILSON, PETRONE	DATE	12/01

twilson
12/10/01
Fields
D:\LOCAL\FULL\80100\24953.68349.83849sdt_twilson.prf

CONST. NO. 19005-3153-44

PROJECT NO.	YEAR	SHEET NO.
IM-40-4(73)206	2002	

REVISIONS

NO.	DATE	BY	BRIEF DESCRIPTION

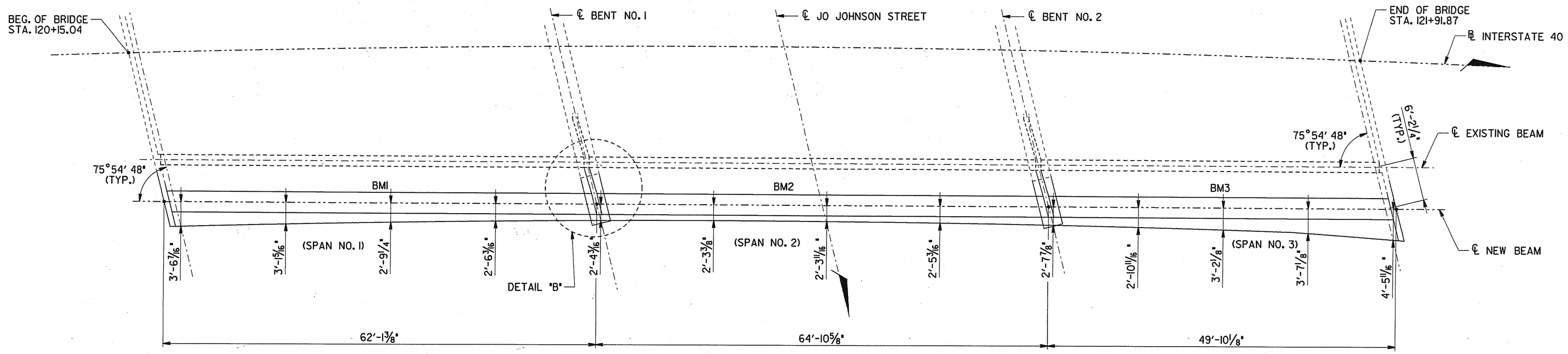

FRAMING PLAN

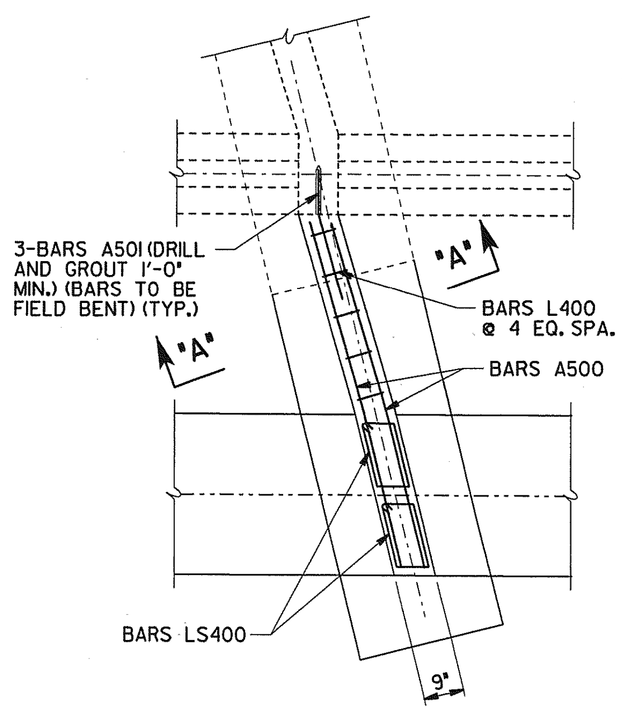

DETAIL "B"

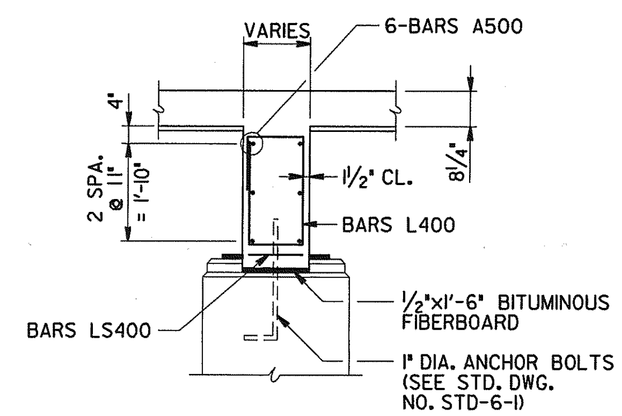

SECTION "A-A"

NOTE: SUPPORT DIAPHRAGMS SHALL BE POURED CONCURRENTLY WITH THE DECK SLAB AND INCLUDED IN THE QUANTITY FOR ITEM NO. 604-03.09.

NOTE: ANCHOR BOLT ASSEMBLIES AT BENTS SHALL BE IN ACCORDANCE WITH STD. DWG. STD-6-1.

DECK CONCRETE POURING SEQUENCE: SLAB CONSTRUCTION JOINTS MAY BE LOCATED AT THE CONTRACTOR'S OPTION SUBJECT TO THE FOLLOWING:

1) NO CONSTRUCTION JOINT MAY BE LOCATED CLOSER THAN 10 FEET OR FUTHER THAN 15 FEET FROM AN INTERIOR SUPPORT.

2) THE SLAB IN THE MIDDLE SECTION OF BOTH ADJACENT SPANS MUST BE POURED TO WITHIN AT LEAST 15 FEET OF THE SUPPORTS EITHER PRIOR TO OR CONCURRENTLY WITH THE SLAB OVER AN INTERIOR SUPPORT.

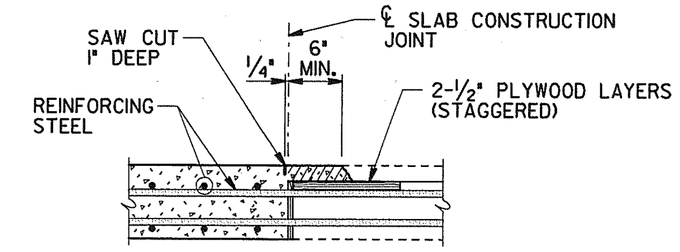

SLAB CONSTRUCTION JOINT DETAIL

NOTE: ALL SLAB CONSTRUCTION JOINTS SHALL BE IN ACCORDANCE WITH THE SLAB CONSTRUCTION JOINT DETAIL SHOWN ABOVE.

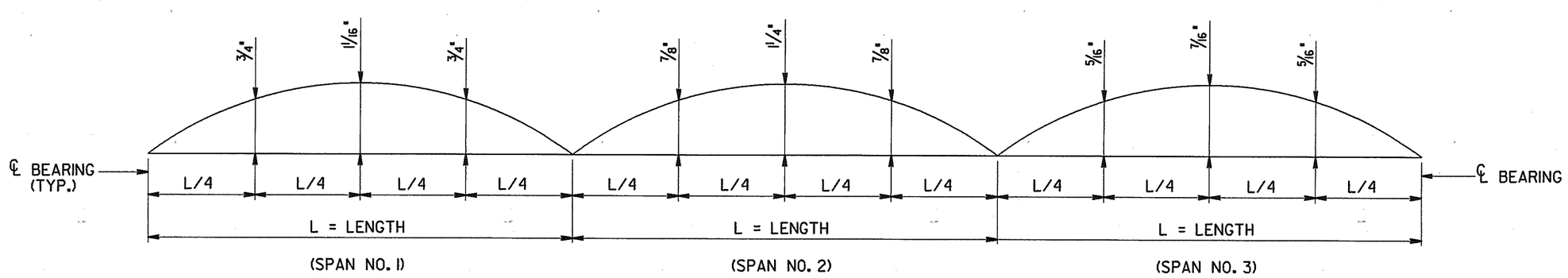

DEAD LOAD CORRECTION CURVE

NOTE: THIS CURVE IS FOR DEAD LOAD SLAB AND ALL DEAD LOADS THAT ARE APPLIED AFTER SLAB IS IN PLACE.

NOTE: IF PRESTRESSED DECK PANELS ARE USED AND THE BEAMS ARE PROFILED AFTER PANELS ARE IN PLACE, REDUCE THE DEAD LOAD CORRECTION VALUES SHOWN BY 25%.

STATE OF TENNESSEE
DEPARTMENT OF TRANSPORTATION

SUPERSTRUCTURE DETAILS
WIDENING OF INTERSTATE 40
OVER
JO JOHNSON STREET
STATION 121+09.40 (LOG MI. 16.88)
BRIDGE ID. NO. 19100400065 (RT. LN.)
DAVIDSON COUNTY
2002

DESIGNED BY W. PETRONE DATE 12/01
DRAWN BY T. WILSON DATE 12/01
SUPERVISED BY PETRONE DATE 12/01
CHECKED BY WILSON, PETRONE DATE 12/01

twilson
12/10/01
Page 1 copies 1
D:\LOCAL\FILL\BOND\24953.053849.03849s02.twilson.prf

M-427-74

CONST. NO. 19005-3153-44

PROJECT NO.	YEAR	SHEET NO.
IM-40-4(73)206	2002	

REVISIONS

NO.	DATE	BY	BRIEF DESCRIPTION

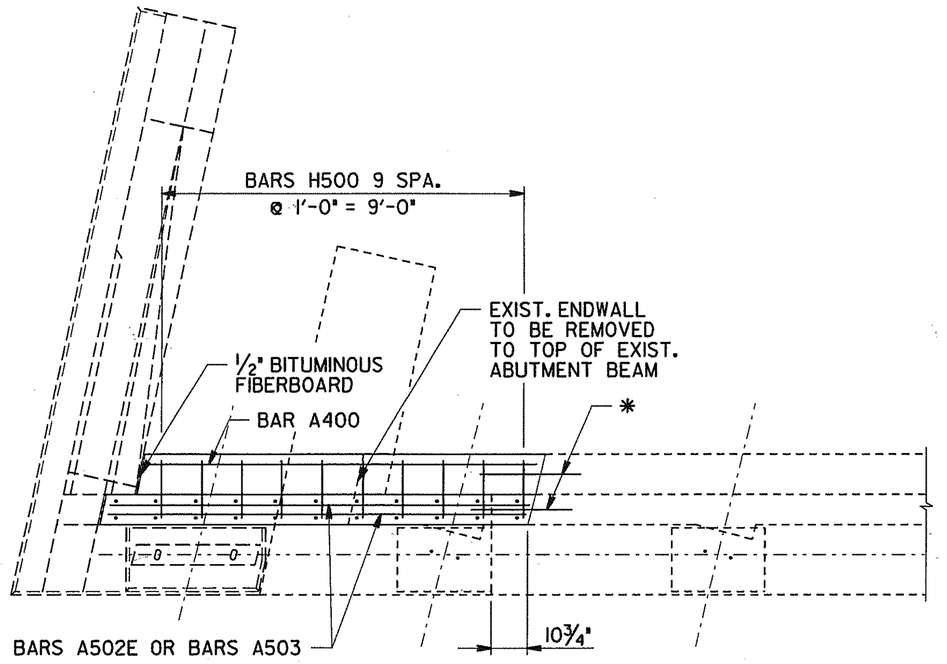

PLAN

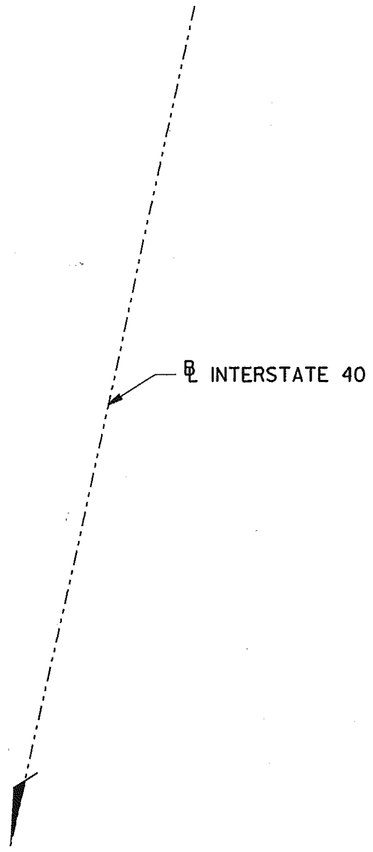

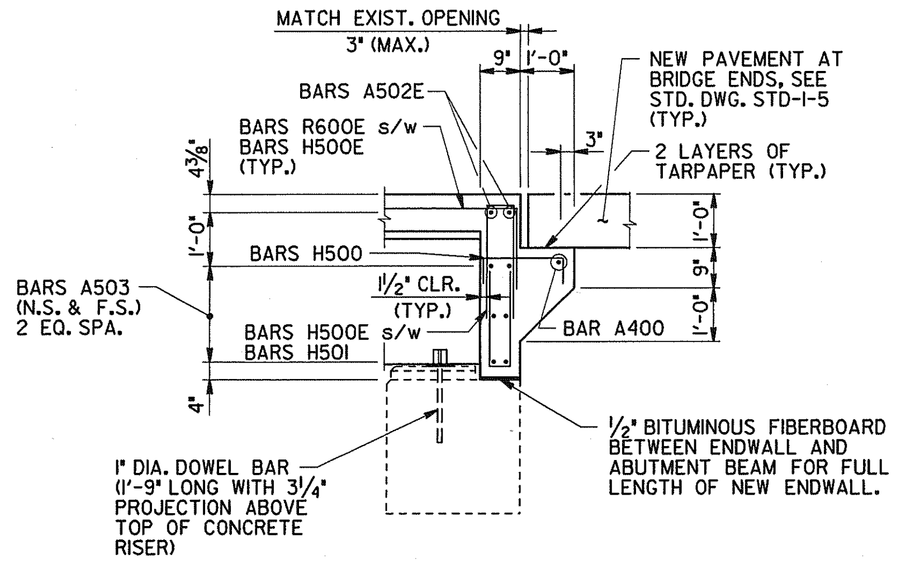

SECTION "A-A"

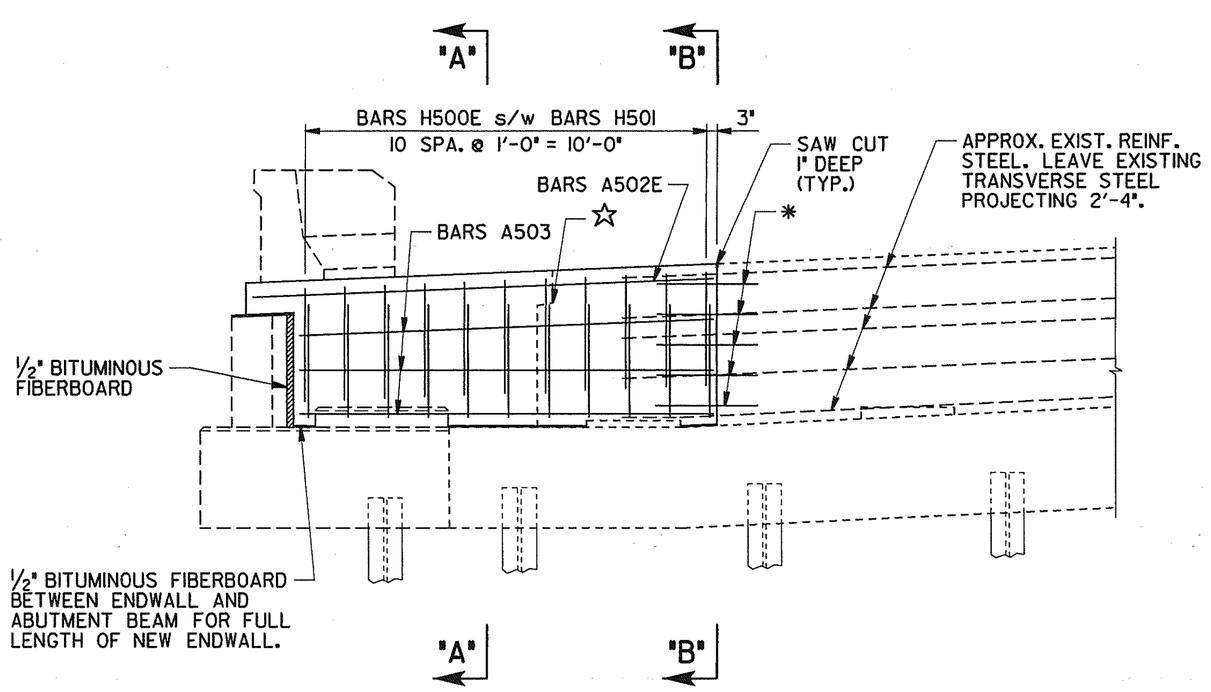

ELEVATION

(LOOKING BACK ON SURVEY - BEG. OF BRIDGE)

* DENOTES: BARS DRILLED AND GROUTED INTO EXISTING ENDWALL WITH 1'-0" EMBEDMENT. (BARS A502)

☆ DENOTES: EXISTING ENDWALL TO BE REMOVED TO TOP OF EXISTING ABUTMENT BEAM.

NOTE: PROVISIONS SHALL BE MADE DURING ENDWALL REMOVAL TO PROTECT THE EXISTING TRANSVERSE REINFORCEMENT. THE EXISTING REINFORCING STEEL SHALL BE COMPLETELY CLEANED, REALIGNED AND INCORPORATED INTO THE NEW ENDWALL CONSTRUCTION.

NOTE: THE CONTRACTOR SHALL EXERCISE EXTREME CAUTION WHEN REMOVING PORTIONS OF ENDWALL ATTACHED TO END OF EXISTING BEAM SO AS NOT TO DAMAGE EITHER THE BEAM OR PROJECTING REINFORCEMENT. THE CONTRACTOR SHALL BE RESPONSIBLE FOR MAKING REPAIRS TO EXISTING BEAM ENDS TO THE SATISFACTION OF THE ENGINEER SHOULD DAMAGE OCCUR.

NOTE: THE ENDWALL SHALL NOT BE POURED UNTIL THE BEAMS ARE IN PLACE. THE TOP 1'-0" OF THE ENDWALL SHALL BE POURED CONCURRENTLY WITH THE END OF SLAB.

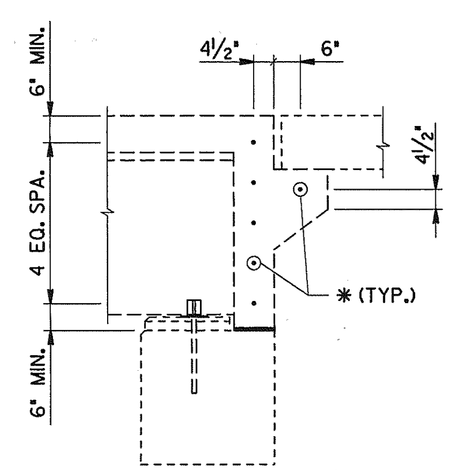

SECTION "B-B"

DESIGNED BY	W. PETRONE	DATE	12/01
DRAWN BY	LITTRELL, WILSON	DATE	12/01
SUPERVISED BY	PETRONE	DATE	12/01
CHECKED BY	WILSON, PETRONE	DATE	12/01

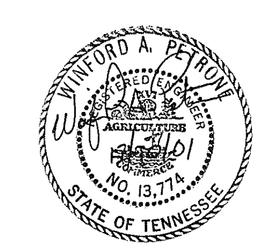

STATE OF TENNESSEE
DEPARTMENT OF TRANSPORTATION

SUPERSTRUCTURE DETAILS
WIDENING OF INTERSTATE 40
OVER
JO JOHNSON STREET
STATION 121+09.40 (LOG MI. 16.88)
BRIDGE ID. NO. 19I00400065 (RT. LN.)
DAVIDSON COUNTY
2002

M-427-75

twilson
12/20/01
Plot: 37
Plot: 1:copies :
DN:\LOCAL\FILE\BONDV24953.5638498.8384984d3.twilson.prf

CONST. NO. 19005-3153-44

PROJECT NO.	YEAR	SHEET NO.
IM-40-4(73)206	2002	

REVISIONS

NO.	DATE	BY	BRIEF DESCRIPTION

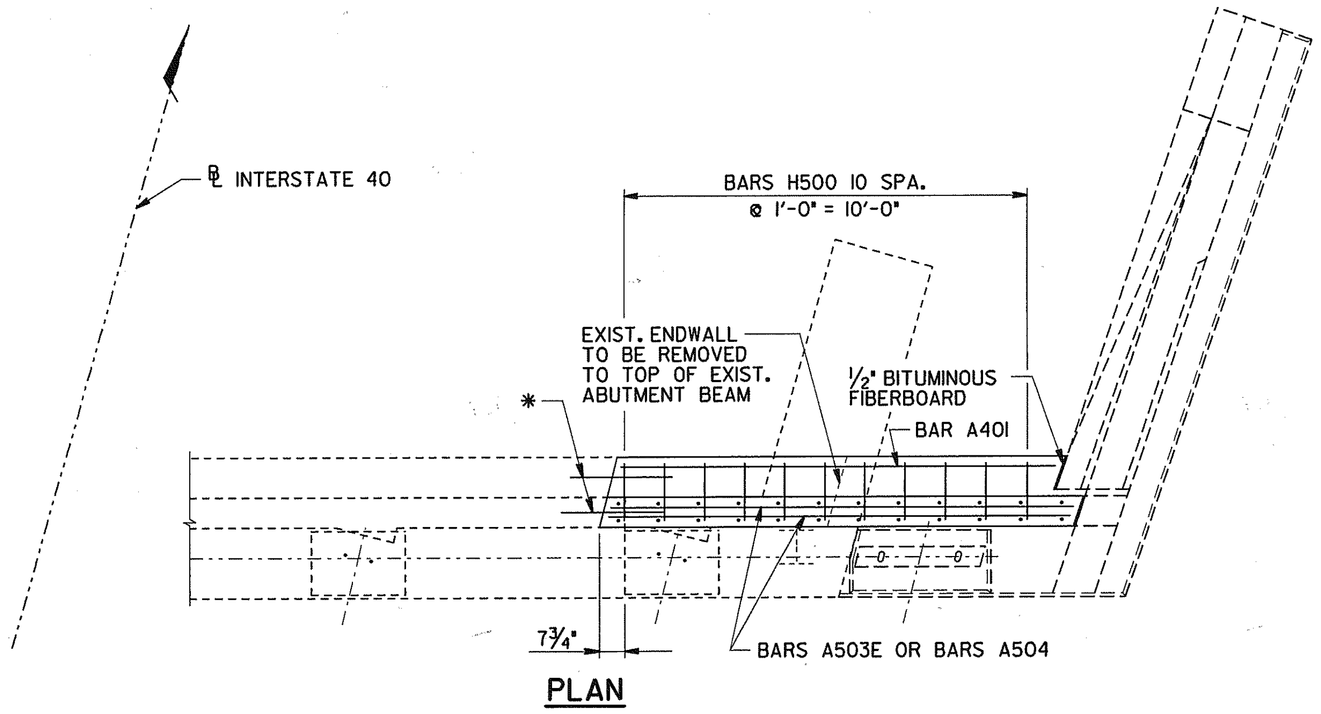

PLAN

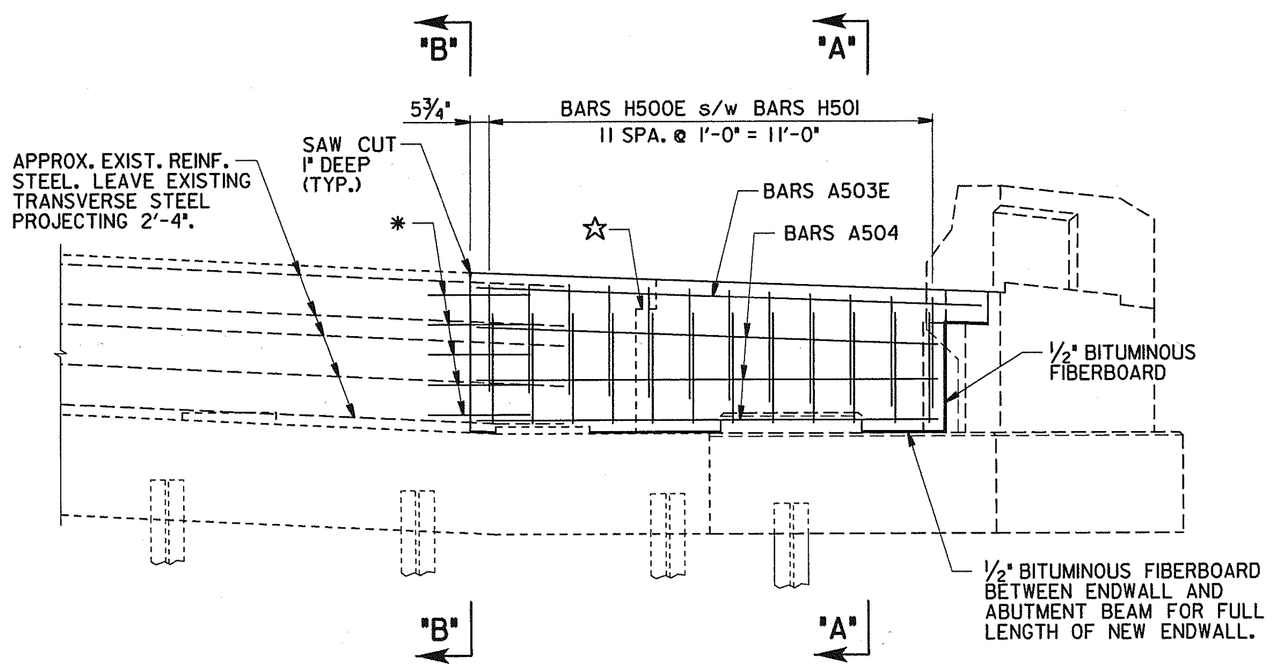

ELEVATION

(LOOKING FORWARD ON SURVEY - END OF BRIDGE)

* DENOTES: BARS DRILLED AND GROUTED INTO EXISTING ENDWALL WITH 1'-0" EMBEDMENT. (BARS A502)

☆ DENOTES: EXISTING ENDWALL TO BE REMOVED TO TOP OF EXISTING ABUTMENT BEAM.

NOTE: PROVISIONS SHALL BE MADE DURING ENDWALL REMOVAL TO PROTECT THE EXISTING TRANSVERSE REINFORCEMENT. THE EXISTING REINFORCING STEEL SHALL BE COMPLETELY CLEANED, REALIGNED AND INCORPORATED INTO THE NEW ENDWALL CONSTRUCTION.

NOTE: THE CONTRACTOR SHALL EXERCISE EXTREME CAUTION WHEN REMOVING PORTIONS OF ENDWALL ATTACHED TO END OF EXISTING BEAM SO AS NOT TO DAMAGE EITHER THE BEAM OR PROJECTING REINFORCEMENT. THE CONTRACTOR SHALL BE RESPONSIBLE FOR MAKING REPAIRS TO EXISTING BEAM ENDS TO THE SATISFACTION OF THE ENGINEER SHOULD DAMAGE OCCUR.

NOTE: THE ENDWALL SHALL NOT BE POURED UNTIL THE BEAMS ARE IN PLACE. THE TOP 1'-0" OF THE ENDWALL SHALL BE POURED CONCURRENTLY WITH THE END OF SLAB.

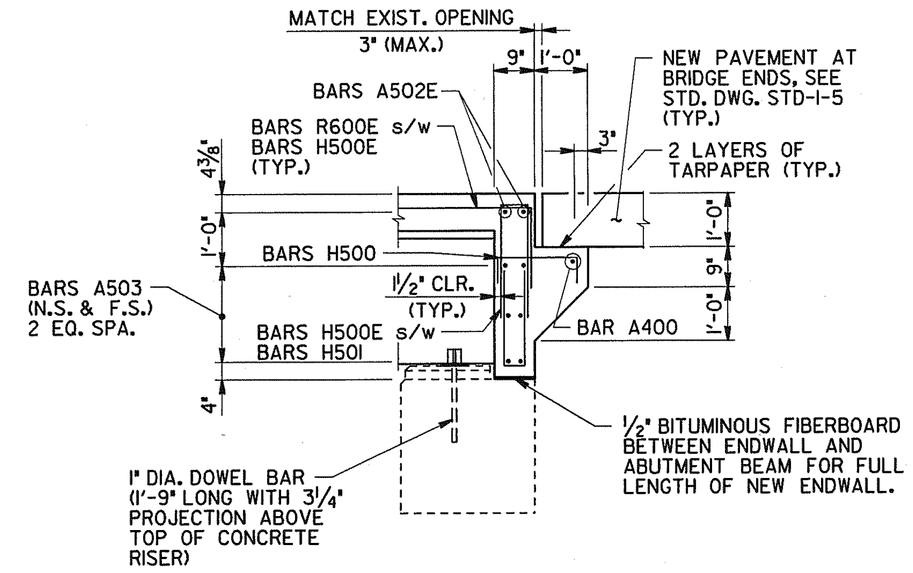

SECTION "A-A"

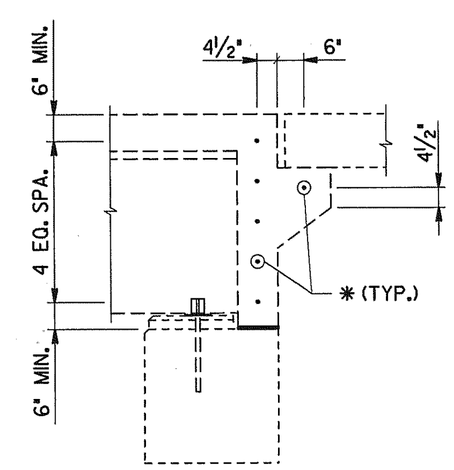

SECTION "B-B"

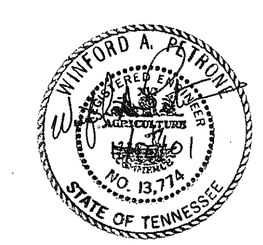

STATE OF TENNESSEE
DEPARTMENT OF TRANSPORTATION

SUPERSTRUCTURE DETAILS
WIDENING OF INTERSTATE 40
OVER
JO JOHNSON STREET
STATION 121+09.40 (LOG MI. 16.88)
BRIDGE ID. NO. 19100400065 (RT. LN.)
DAVIDSON COUNTY
2002

M-427-76

DESIGNED BY W. PETRONE DATE 12/01
DRAWN BY t. wilson DATE 12/01
SUPERVISED BY PETRONE DATE 12/01
CHECKED BY WILSON, PETRONE DATE 12/01

twilson
12/6/01
Date/Time
Plot: 1 copies
D:\LOCAL\FULL\BOND\24953.J583895.J583895\04.twilson.prf

CONST. NO. 19005-3153-44

PROJECT NO.	YEAR	SHEET NO.
IM-40-4(73)206	2002	

REVISIONS

NO.	DATE	BY	BRIEF DESCRIPTION

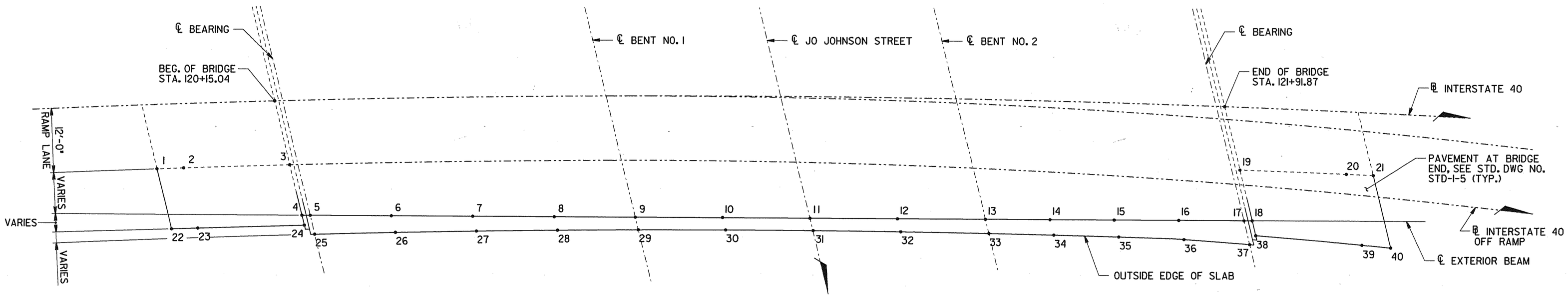

BRIDGE SCREED PLAN

TABLE OF STATIONS AND ELEVATIONS

POINT	STATION	ELEVATION	POINT	STATION	ELEVATION
1	119+92.54	456.01	21	122+20.41	448.46
2	119+97.57	455.84	22	119+94.91	455.46
3	120+17.65	455.18	23	119+99.96	455.29
4	120+19.84	454.71	24	120+21.51	454.57
5	120+21.40	454.66	25	120+22.08	454.48
6	120+36.62	454.13	26	120+37.36	453.97
7	120+51.95	453.61	27	120+52.64	453.47
8	120+67.28	453.09	28	120+67.91	452.96
9	120+82.44	452.58	29	120+83.03	452.46
10	120+98.75	452.03	30	120+99.42	451.92
11	121+15.12	451.49	31	121+15.85	451.37
12	121+31.49	450.95	32	121+32.27	450.83
13	121+47.89	450.42	33	121+48.60	450.28
14	121+60.01	450.02	34	121+60.86	449.88
15	121+72.22	449.63	35	121+73.20	449.47
16	121+85.43	449.20	36	121+85.55	449.05
17	121+96.62	448.86	37	121+97.68	448.63
18	121+98.18	448.81	38	121+98.76	448.67
19	121+95.23	449.29	39	122+18.99	447.96
20	122+15.32	448.63	40	122+24.43	447.77

STATE OF TENNESSEE
DEPARTMENT OF TRANSPORTATION

BRIDGE SCREED
WIDENING OF INTERSTATE 40
OVER
JO JOHNSON STREET
STATION 121+09.40 (LOG MI. 16.88)
BRIDGE ID. NO. 19I00400065 (RT. LN.)
DAVIDSON COUNTY
2002

DESIGNED BY W. PETRONE DATE 12/01
DRAWN BY T. WILSON DATE 12/01
SUPERVISED BY PETRONE DATE 12/01
CHECKED BY WILSON, PETRONE DATE 12/01

twilson
12/10/01
Plot Scale: 1:
Plot Date: 12/10/01
Plot Time: 10:10:10
Plot Name: C:\LOCAL\DEL\00\D\24953_153319_83349\scr_twilson.prf

M-427-77

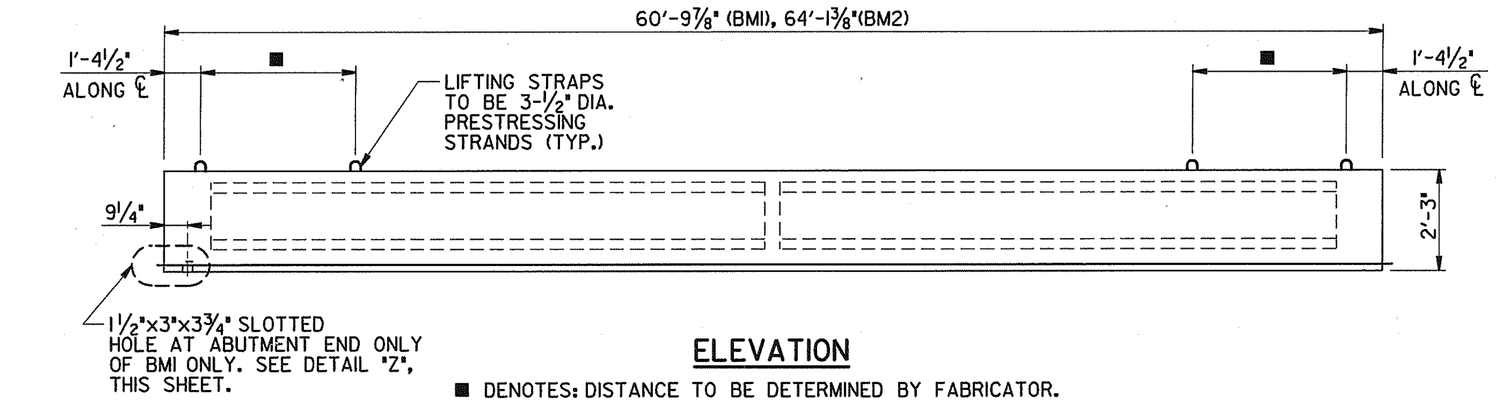

ELEVATION

■ DENOTES: DISTANCE TO BE DETERMINED BY FABRICATOR.

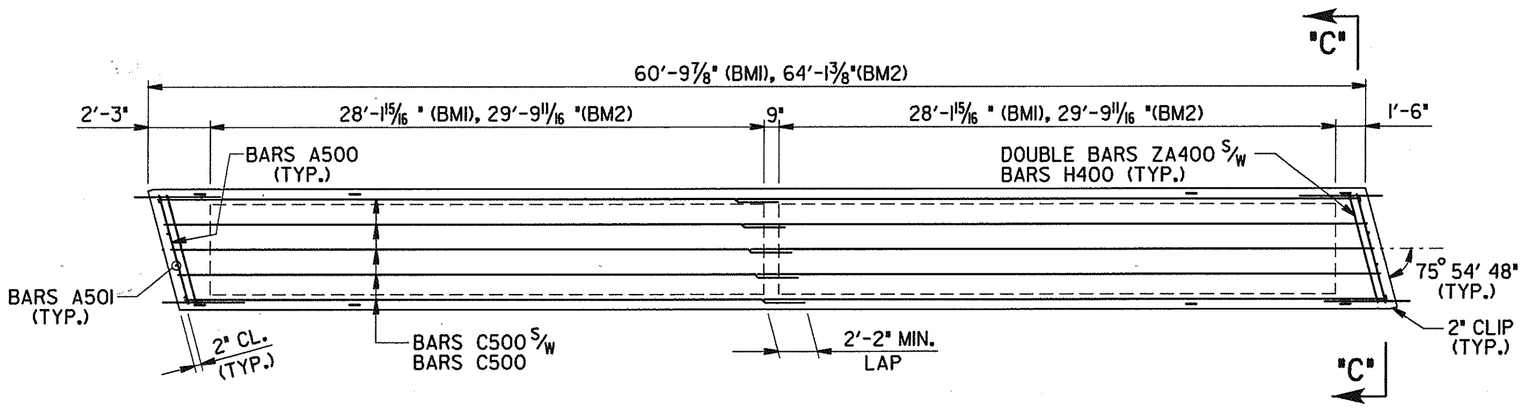

PLAN

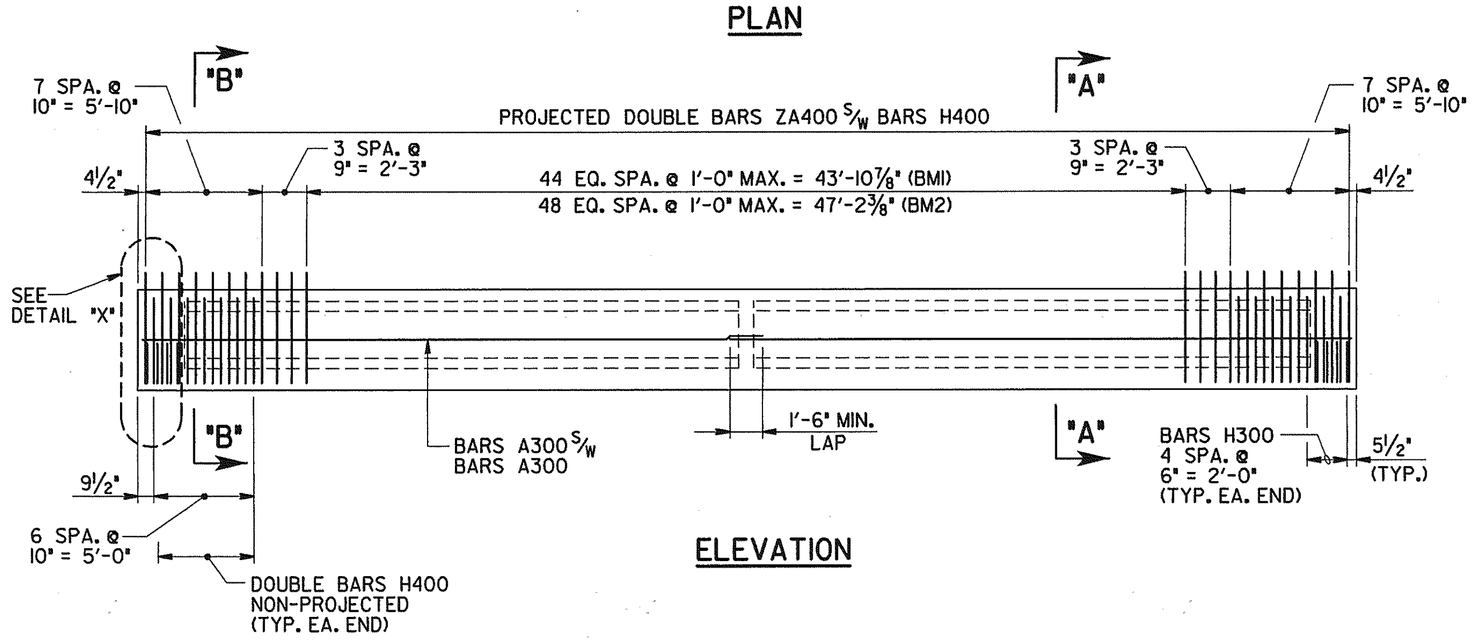

ELEVATION

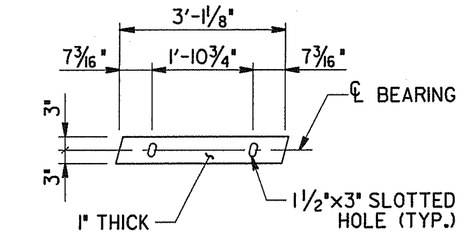

TYP. AT ABUTMENTS (1 REQUIRED)

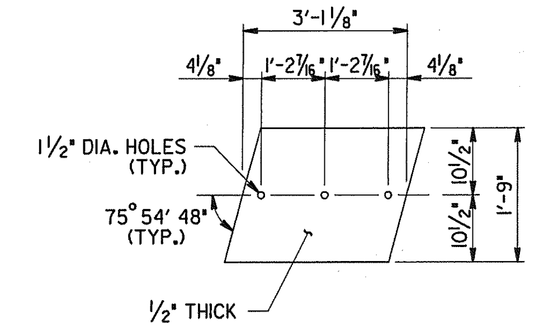

TYP. AT BENTS (2 REQUIRED)

ELASTOMERIC BEARING PAD DETAILS

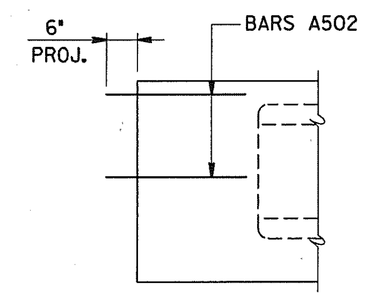

DETAIL "X"

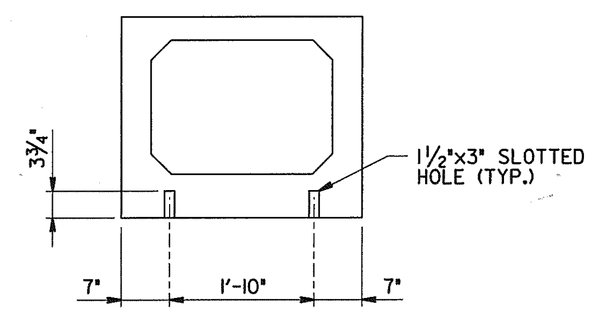

DETAIL "Z"

(AT RIGHT ANGLES TO BEAM)

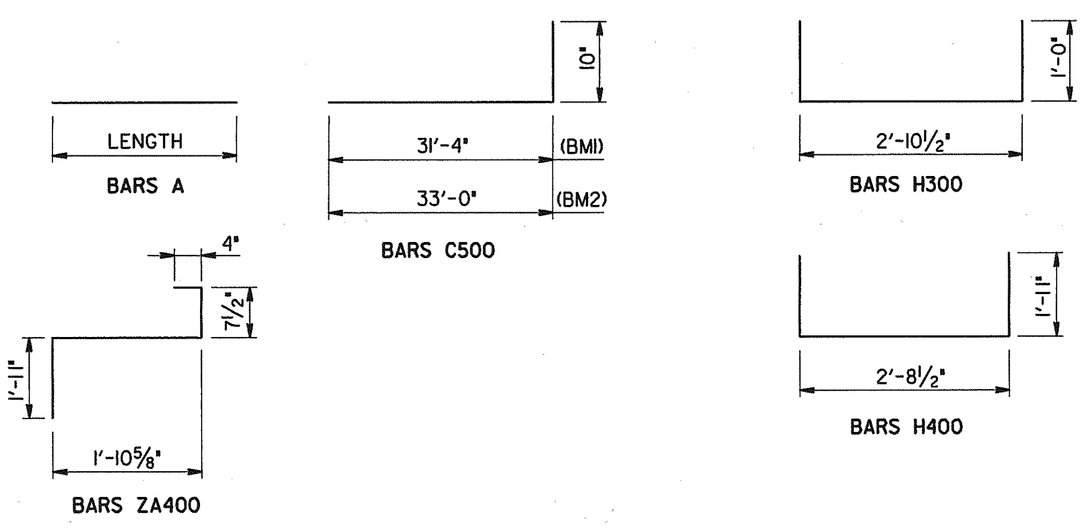

NOTES

THE CONCRETE FOR THIS CONSTRUCTION SHALL BE OF SUCH PROPERTIES AS TO ATTAIN A COMPRESSIVE STRENGTH OF NOT LESS THAN 5,500 PSI. AT THE AGE OF 28 DAYS AND STRESS TRANSFER SHALL NOT BE MADE TO THE BRIDGE MEMBER UNTIL THE TEST SPECIMENS INDICATE THAT THE CONCRETE HAS REACHED A COMPRESSIVE STRENGTH OF AT LEAST 4,500 PSI. SEE GENERAL NOTES FOR CONCRETE FINISHING NOTE.

SEE STD-14-3 FOR BOX BEAM STANDARD DETAILS, NOTES AND REINFORCING.

BILL OF STEEL

(PER BEAM)

BAR	SIZE	NO. REQ'D	LENGTH (BMI)	NO. REQ'D	LENGTH (BM2)
A300	3	4	31'-0"	4	32'-8"
A500	5	4	2'-9"	4	2'-9"
A501	5	8	1'-11"	8	1'-11"
A502	5	4	5'-6"	4	5'-6"
C500	5	10	32'-2"	10	33'-10"
H300	3	10	4'-11"	10	4'-11"
H400	4	66	6'-7"	69	6'-7"
ZA400	4	94	4'-9"	97	4'-9"

ESTIMATED QUANTITIES

(PER BEAM)

	CLASS "A" CONCRETE C.Y.	REINFORCING STEEL LB.	PRESTRESSING STRANDS (LOW RELAXATION) LB.
BMI	8.8	1,040	718
BM2	9.3	1,082	756

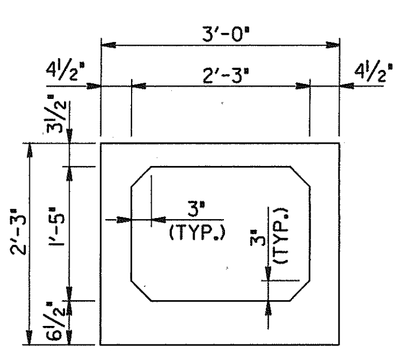

SECTION SHOWING PROPERTIES

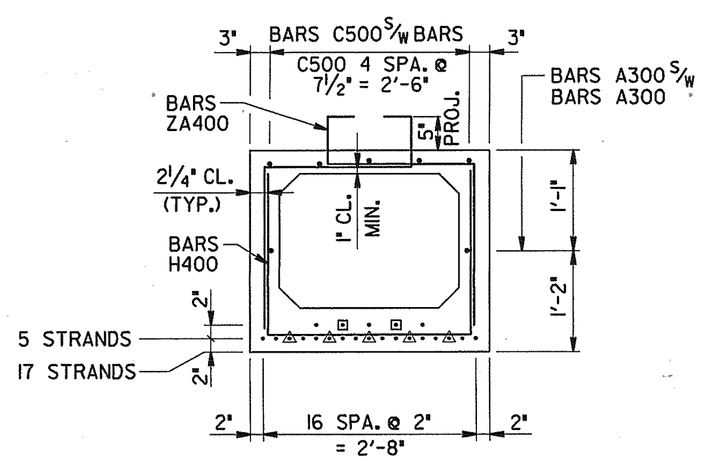

SECTION "A-A"

(SHOWING STRAND PATTERN)

△ DENOTES: BREAK BOND @ 2'-0" FROM END OF BEAM

⊡ DENOTES: BREAK BOND @ 4'-0" FROM END OF BEAM

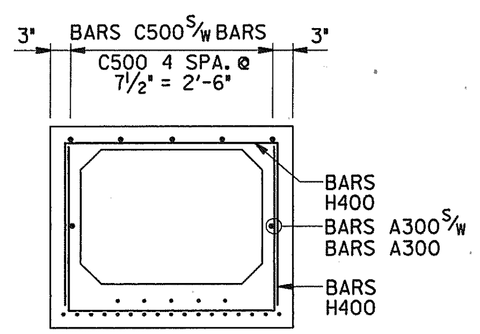

SECTION "B-B"

(SHOWING NON-PROJECTION BARS)

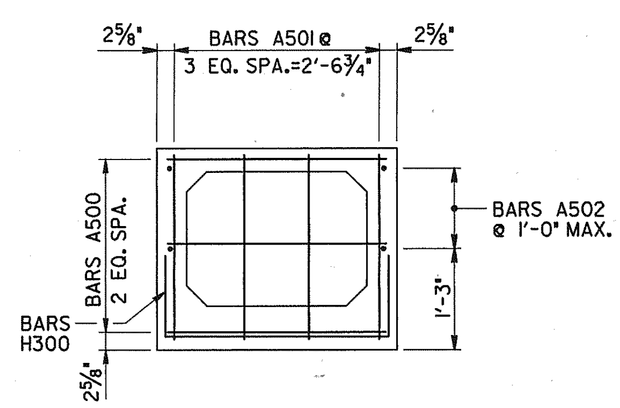

SECTION "C-C"

PRESTRESSED BEAM DESIGN DATA
(PER BEAM)

LIVE LOAD DISTRIBUTION FACTOR: 1.40 WHEELS
COMPOSITE DEAD LOAD: 263 LB/FT
COMPOSITE DESIGN SLAB (f'c = 3,000 PSI)

WINFORD A. PETRONE
REGISTERED PROFESSIONAL ENGINEER
AGRICULTURE
NO. 13,724
STATE OF TENNESSEE

STATE OF TENNESSEE
DEPARTMENT OF TRANSPORTATION

PRESTRESSED BEAM DETAILS
SPANS NOS. 1 AND 2
WIDENING OF INTERSTATE 40
OVER
JO JOHNSON STREET
STATION 121+09.40 (LOG MI. 16.88)
BRIDGE ID. NO. 19I00400065 (RT. LN.)
DAVIDSON COUNTY
2002

M-427-78

DESIGNED BY W. PETRONE DATE 12/01
DRAWN BY T. WILSON DATE 12/01
SUPERVISED BY PETRONE DATE 12/01
CHECKED BY WILSON, PETRONE DATE 12/01

twilson
12/01/01
Plot Scale: 1 copies
DIV.LOCAL\DELL\BOND\24953.583949.8384900.twilson.dgn f

CONST. NO. 19005-3153-44

PROJECT NO.	YEAR	SHEET NO.
IM-40-4(73)206	2002	

REVISIONS

NO.	DATE	BY	BRIEF DESCRIPTION

CONST. NO. 19005-3153-44

PROJECT NO.	YEAR	SHEET NO.
IM-40-4(73)206	2002	

REVISIONS

NO.	DATE	BY	BRIEF DESCRIPTION

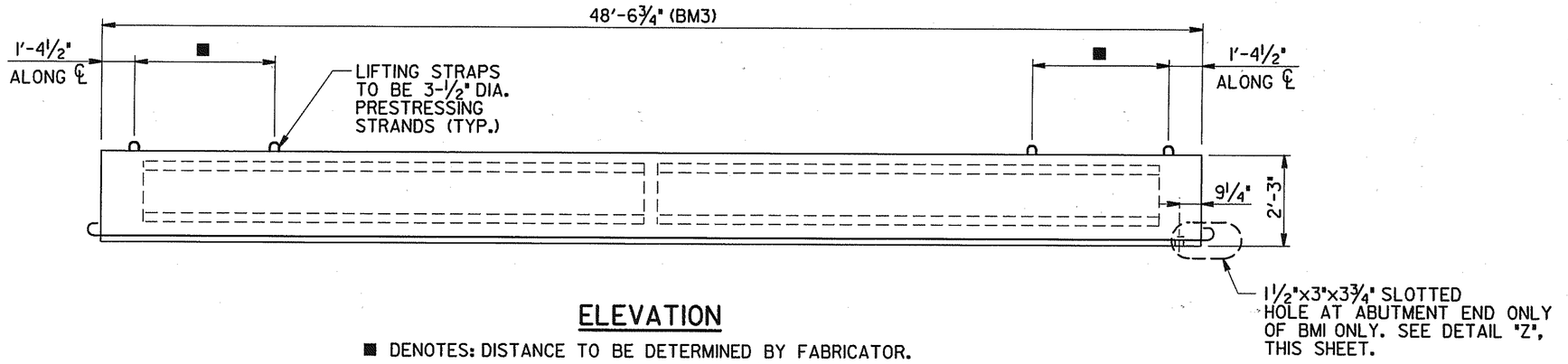

ELEVATION

■ DENOTES: DISTANCE TO BE DETERMINED BY FABRICATOR.

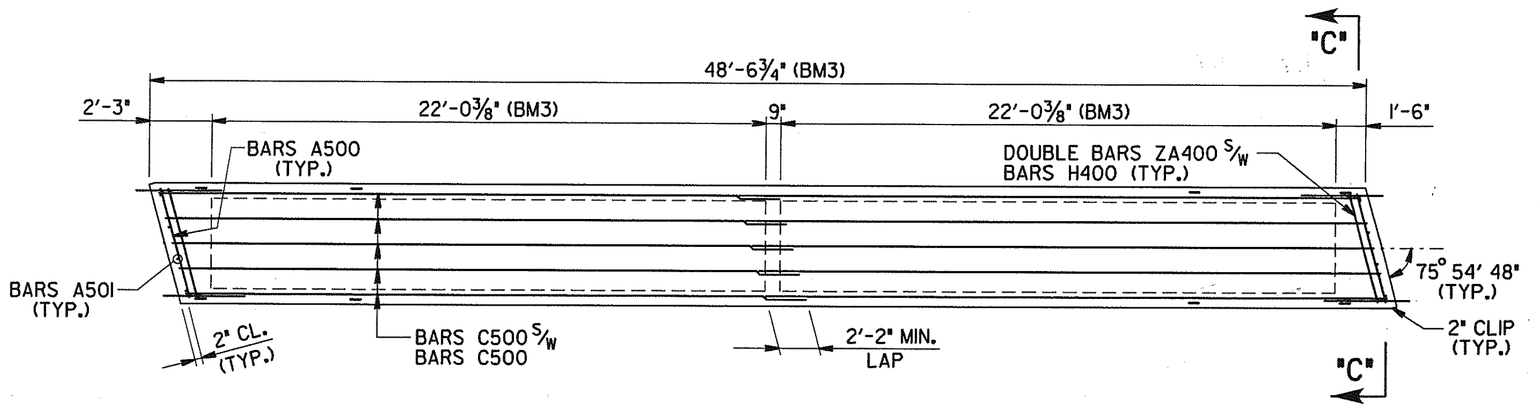

PLAN

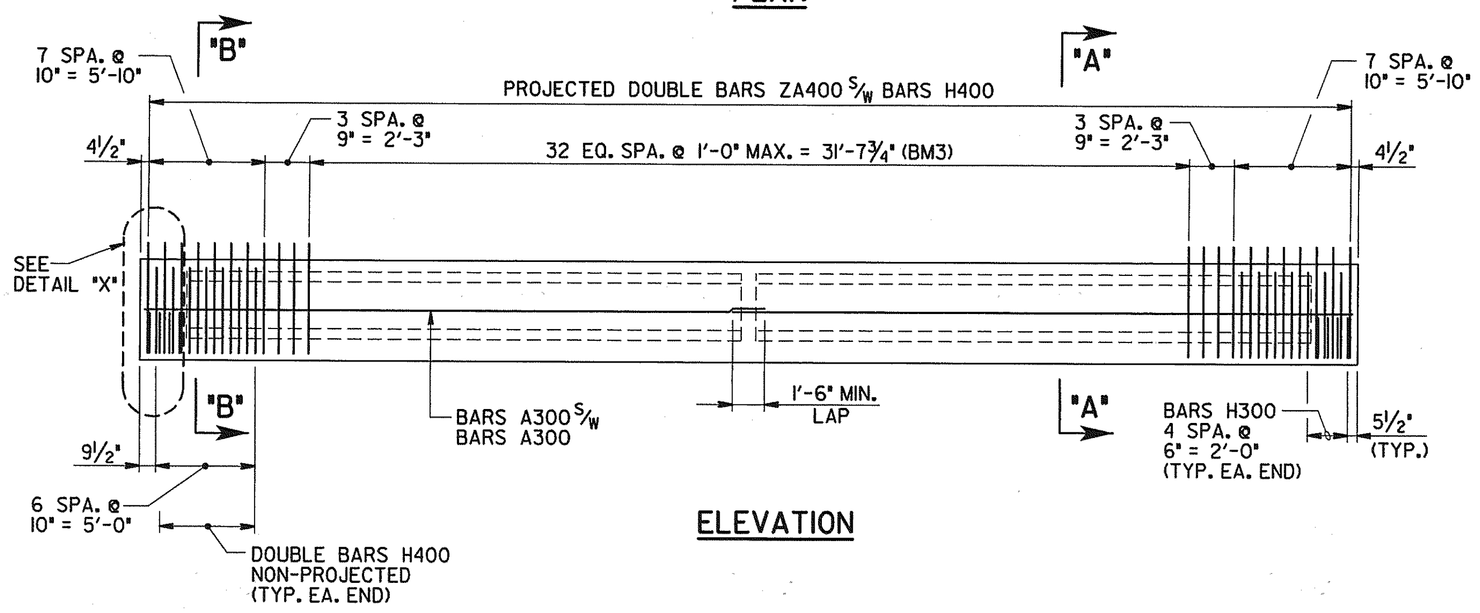

ELEVATION

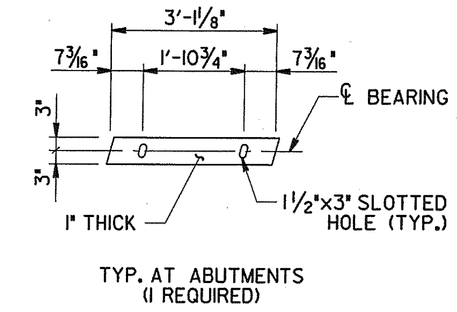

TYP. AT ABUTMENTS
(1 REQUIRED)

ELASTOMERIC BEARING PAD DETAIL

NOTE: FOR BEARING PAD AT BENTS SEE DWG. NO. M-XX-XX.

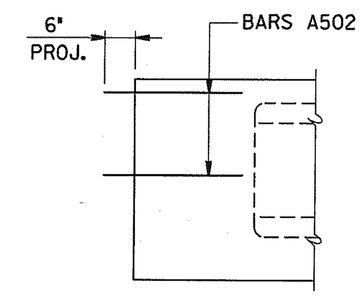

DETAIL "X"

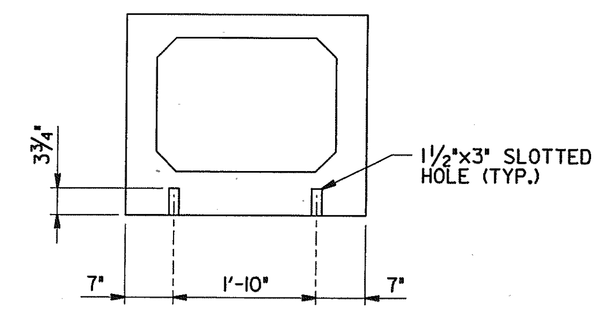

DETAIL "Z"

(AT RIGHT ANGLES TO BEAM)

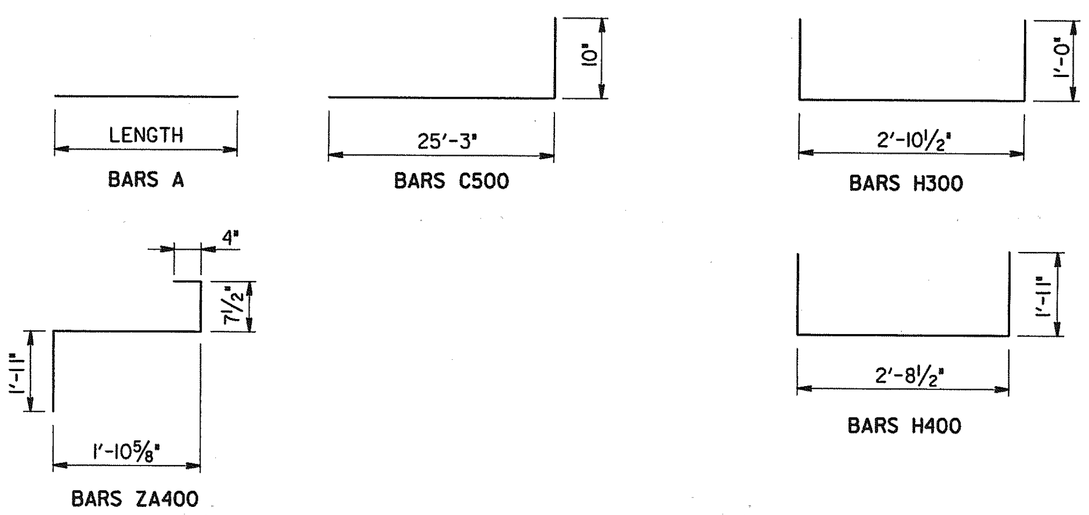

NOTES

THE CONCRETE FOR THIS CONSTRUCTION SHALL BE OF SUCH PROPERTIES AS TO ATTAIN A COMPRESSIVE STRENGTH OF NOT LESS THAN 5,500 PSI. AT THE AGE OF 28 DAYS AND STRESS TRANSFER SHALL NOT BE MADE TO THE BRIDGE MEMBER UNTIL THE TEST SPECIMENS INDICATE THAT THE CONCRETE HAS REACHED A COMPRESSIVE STRENGTH OF AT LEAST 4,500 PSI. SEE GENERAL NOTES FOR CONCRETE FINISHING NOTE.

SEE STD-14-3 FOR BOX BEAM STANDARD DETAILS, NOTES AND REINFORCING.

BILL OF STEEL

(PER BEAM)

BAR	SIZE	NO. REQ'D	LENGTH (BMI)
A300	3	4	24'-11"
A500	5	4	2'-9"
A501	5	8	1'-11"
A502	5	4	5'-6"
C500	5	10	26'-1"
H300	3	10	4'-11"
H400	4	81	6'-7"
ZA400	4	106	4'-9"

ESTIMATED QUANTITIES

(PER BEAM BM3)

CLASS "A" CONCRETE C.Y.	REINFORCING STEEL LB.	PRESTRESSING STRANDS (LOW RELAXATION) LB.
7.1	1,071	367

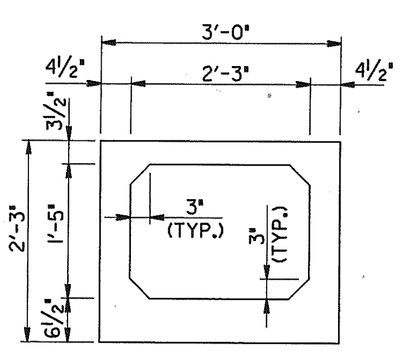

SECTION SHOWING PROPERTIES

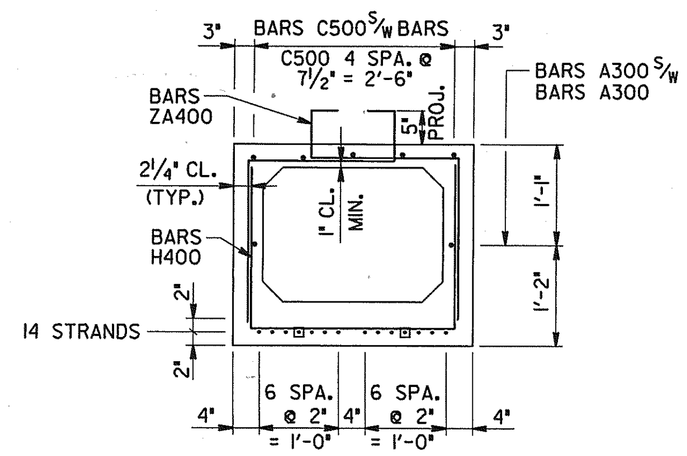

SECTION "A-A"

(SHOWING STRAND PATTERN)

⊡ DENOTES: BREAK BOND @ 4'-0" FROM END OF BEAM

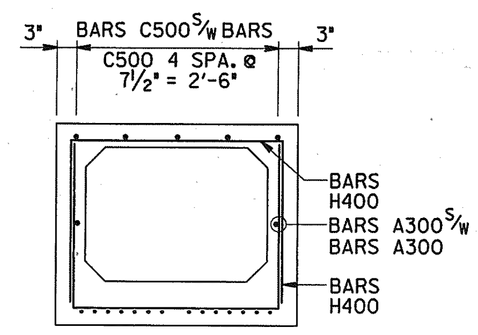

SECTION "B-B"

(SHOWING NON-PROJECTION BARS)

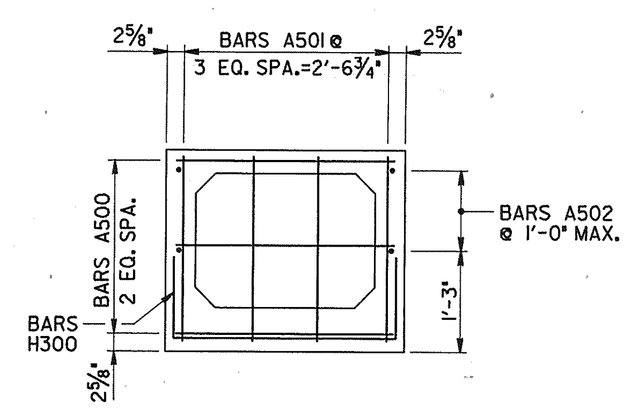

SECTION "C-C"

PRESTRESSED BEAM DESIGN DATA

(PER BEAM)

LIVE LOAD DISTRIBUTION FACTOR: 1.40 WHEELS
COMPOSITE DEAD LOAD: 263 LB/FT
COMPOSITE DESIGN SLAB (f'c = 3,000 PSI)

WINFORD A. PETRONE
REGISTERED ENGINEER
NO. 13,773
STATE OF TENNESSEE

STATE OF TENNESSEE
DEPARTMENT OF TRANSPORTATION

PRESTRESSED BEAM DETAILS
SPAN NO. 3
WIDENING OF INTERSTATE 40
OVER
JO JOHNSON STREET
STATION 121+09.40 (LOG MI. 16.88)
BRIDGE ID. NO. 19100400065 (RT. LN.)
DAVIDSON COUNTY
2002

DESIGNED BY	W. PETRONE	DATE	12/01
DRAWN BY	T. WILSON	DATE	12/01
SUPERVISED BY	PETRONE	DATE	12/01
CHECKED BY	WILSON, PETRONE	DATE	12/01

twilson
12/10/01
10:00 AM
Plot 2 copies :
D:\LOCAL\FILL\BGNDV0.24953.983849.83849sb2.twilson.pr-f

M-427-79

CONST. NO. 19005-3153-44

PROJECT NO.	YEAR	SHEET NO.
IM-40-4(73)206	2002	

REVISIONS

NO.	DATE	BY	BRIEF DESCRIPTION
1	1-10-02	W.A.P.	ADDED RISER BLOCK PLAN VIEW

✱ INDICATES BARS DRILLED AND GROUTED INTO EXISTING ABUTMENT BEAM WITH 1'-9" EMBEDMENT. (BARS A742)

Δ DENOTES: 1/2" BITUMINOUS FIBERBOARD.

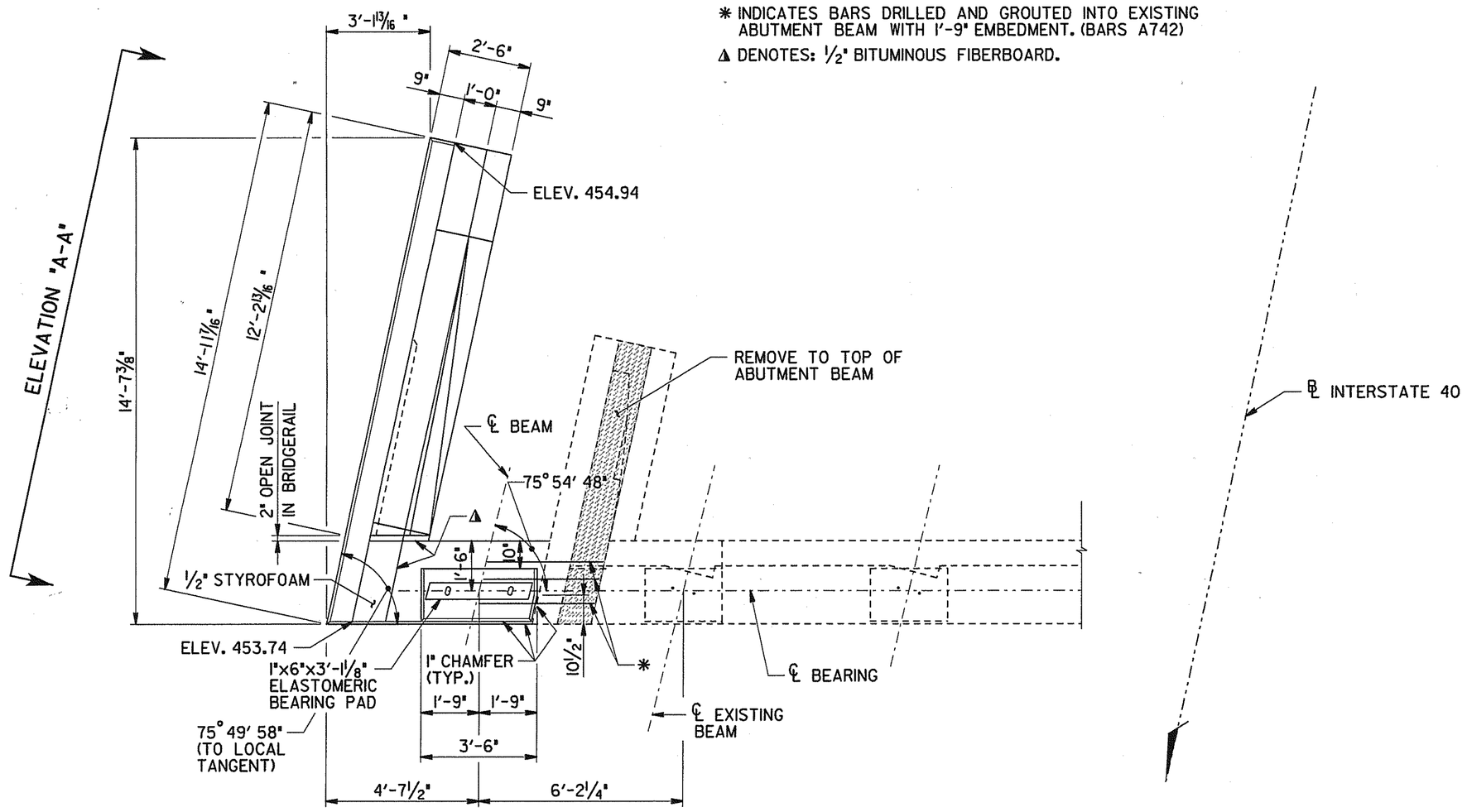

PLAN

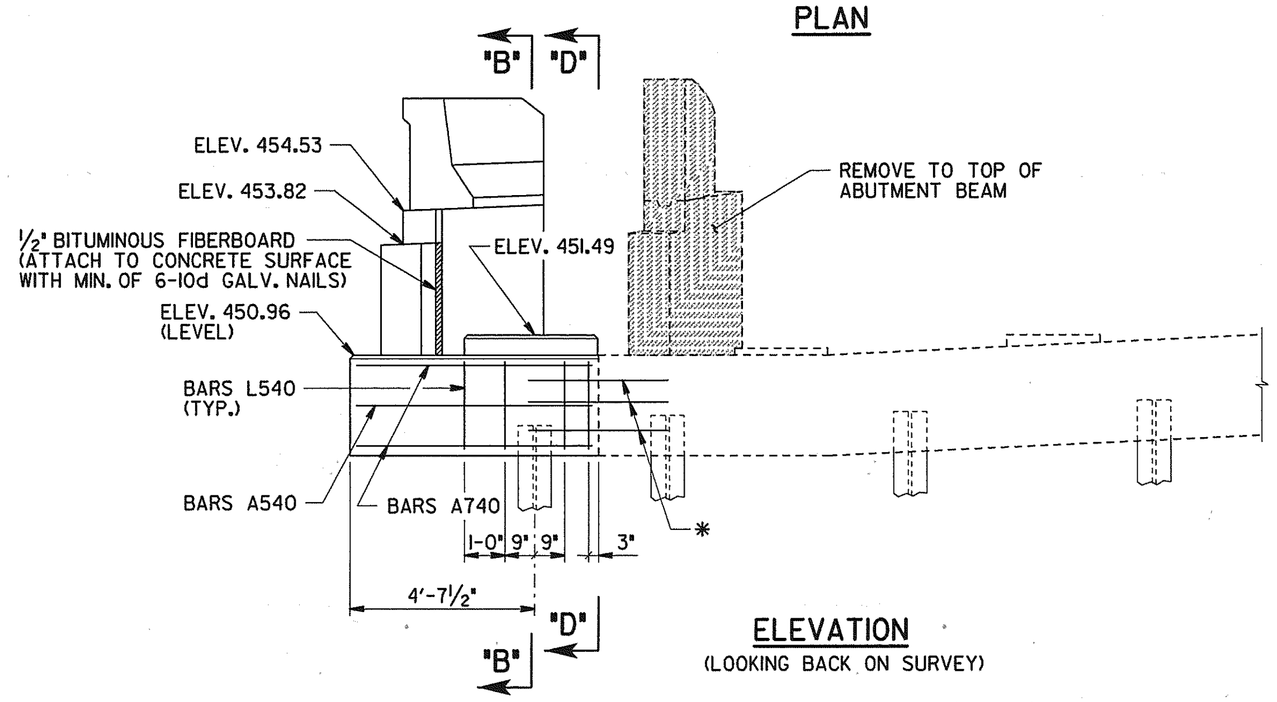

ELEVATION
(LOOKING BACK ON SURVEY)

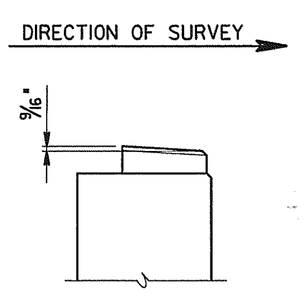

RISER BLOCK SLOPE DETAILS

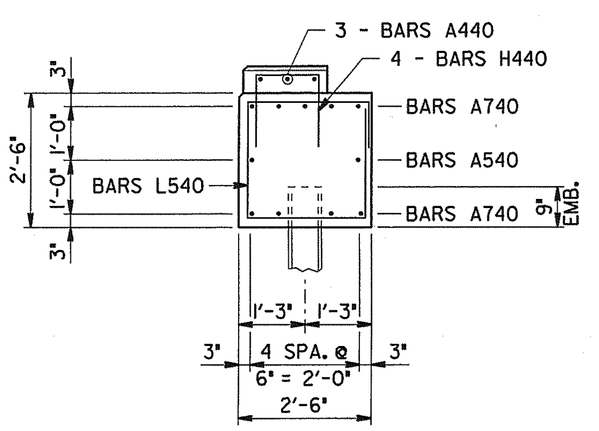

SECTION "B-B"

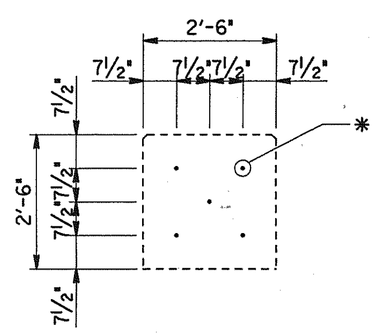

SECTION "D-D"

✱ INDICATES BARS DRILLED AND GROUTED INTO EXISTING CAP BEAM WITH 1'-9" EMBEDMENT. (BARS A742)

NOTES:

1. E - INDICATES BARS TO BE EPOXY COATED.
   N.S. - INDICATES NEAR SIDE
   F.S. - INDICATES FAR SIDE
   E.F. - INDICATES EACH FACE
2. WHEN POURING THE WINGWALLS, PROVISIONS SHALL BE MADE FOR SETTING REINFORCING STEEL FOR THE WINGPOSTS AND PARAPETS. FOR DETAILS OF WINGPOSTS AND PARAPETS SEE STANDARD DWG. STD-1-1.
3. RISER BLOCKS TO BE POURED MONOLITHCALLY WITH ABUTMENT BEAM.
4. BRIDGE SEAT ELEVATIONS ARE GIVEN AT THE INTERSECTION OF ℄ BEAM AND ℄ BEARING.
5. ELASTOMERIC PADS SHALL BE IN PLACE A MINIMUM OF ONE DAY BEFORE BEING DISTURBED BY SETTING BEAMS. PLACE RUBBER BONDING CEMENT IN SUCH A WAY THAT VISIBLE CONCRETE SURFACES WILL NOT BE STAINED.
6. FOR DRAINAGE DETAILS, SEE STD. DWG. NO. STD-10-1.
7. SEE STD. DWG. STD-6-1 FOR PILE DETAILS AND NOTES.
8. COST OF BRIDGE RAIL AND POST IS TO BE INCLUDED IN THE UNIT PRICE BID FOR THE BRIDGE RAIL SYSTEM.
9. OUTSIDE EDGE OF SLAB AND BRIDGE RAIL TO CONFORM TO HORIZONTAL CURVE.

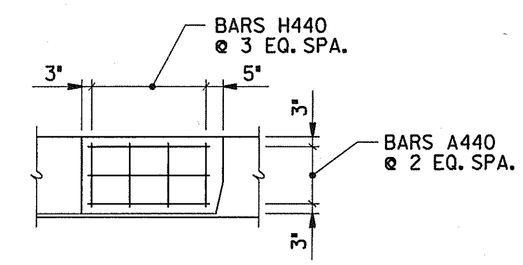

TYPICAL PLAN OF RISER BLOCK ⚠1

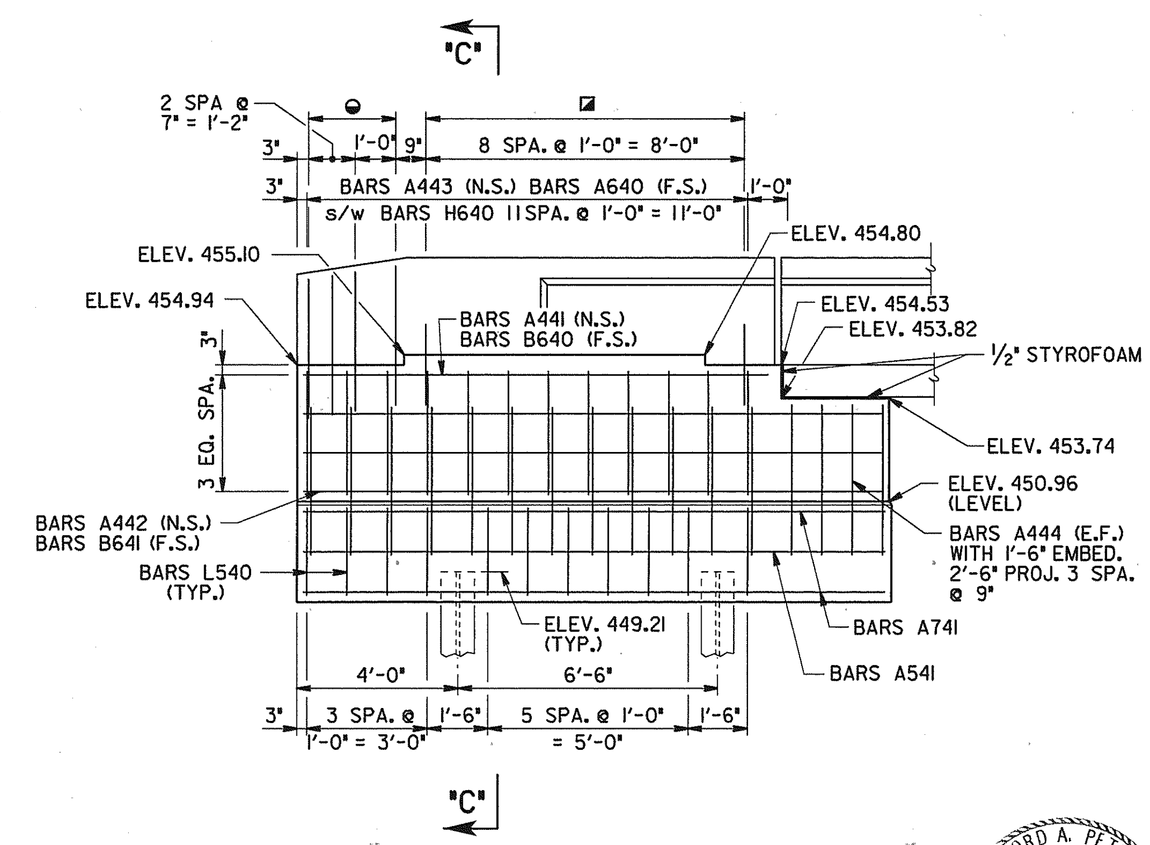

ELEVATION "A-A"

◒ DENOTES: BARS A470E (E.F.)

◪ DENOTES: BARS B470E (E.F.)

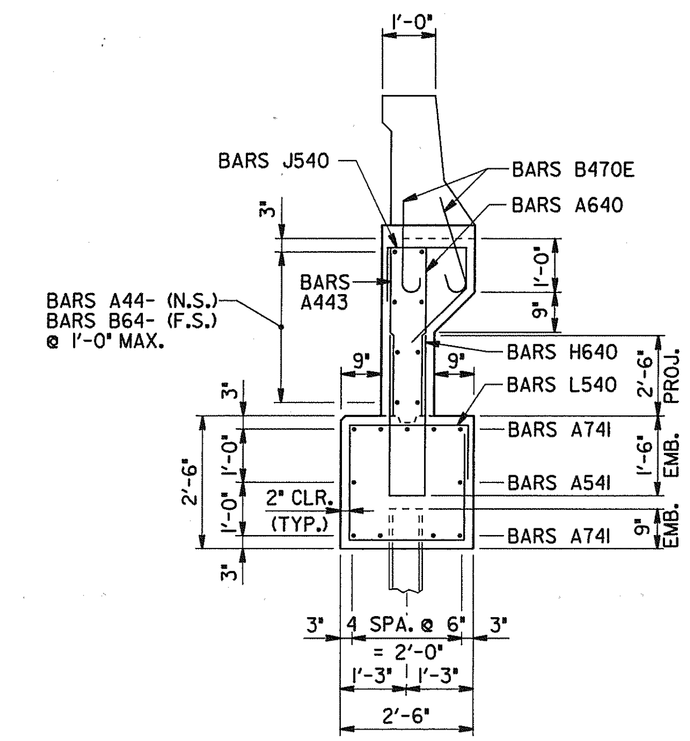

SECTION "C-C"

ESTIMATED QUANTITIES

CLASS "A" CONCRETE (BRIDGES) C.Y.	REINFORCING STEEL LBS.	EPOXY COATED REINFORCING STEEL LBS.
7	1,056	58

STATE OF TENNESSEE
DEPARTMENT OF TRANSPORTATION

ABUTMENT NO. 1
WIDENING OF INTERSTATE 40
OVER
JO JOHNSON STREET
STATION 121+09.40 (LOG MI. 16.88)
BRIDGE ID. NO. 19100400065 (RT. LN.)
DAVIDSON COUNTY
2002

WINFORD A. PETRONE
REGISTERED ENGINEER
01-15-02
NO. 13,773
STATE OF TENNESSEE

DESIGNED BY	W. PETRONE	DATE	12/01
DRAWN BY	LITTRELL, WILSON	DATE	12/01
SUPERVISED BY	PETRONE	DATE	12/01
CHECKED BY	WILSON, PETRONE	DATE	12/01

TWilson
1/8/2002
09:06:45
pw:\\pwpw01.tdot.state.tn.us:PW01\Projects 1
D:\LOCAL\FILL\600\0\27\1_583849_b3849sdb_TWilson.prf

M-427-80

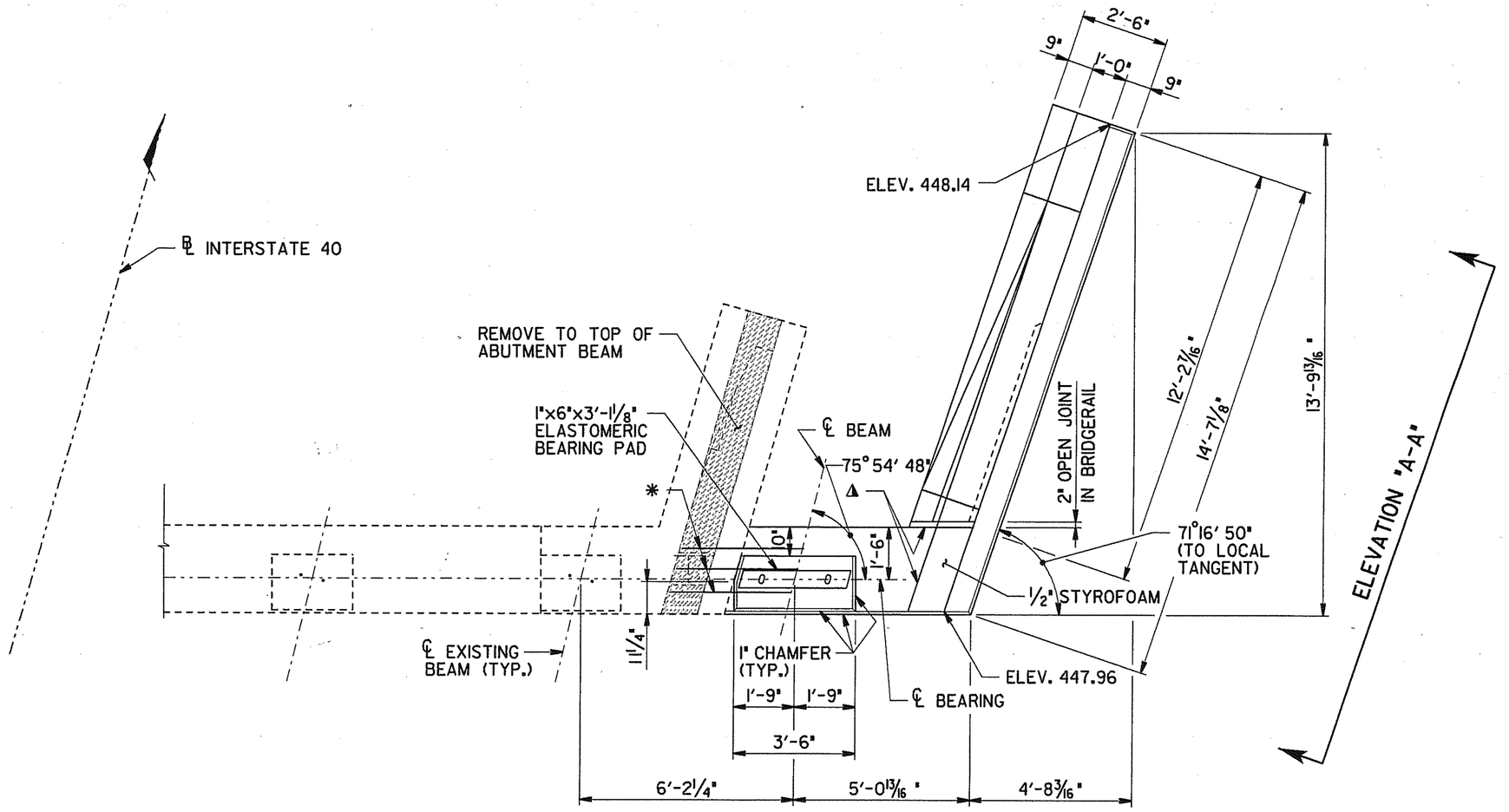

PLAN

Δ DENOTES: 1/2" BITUMINOUS FIBERBOARD.

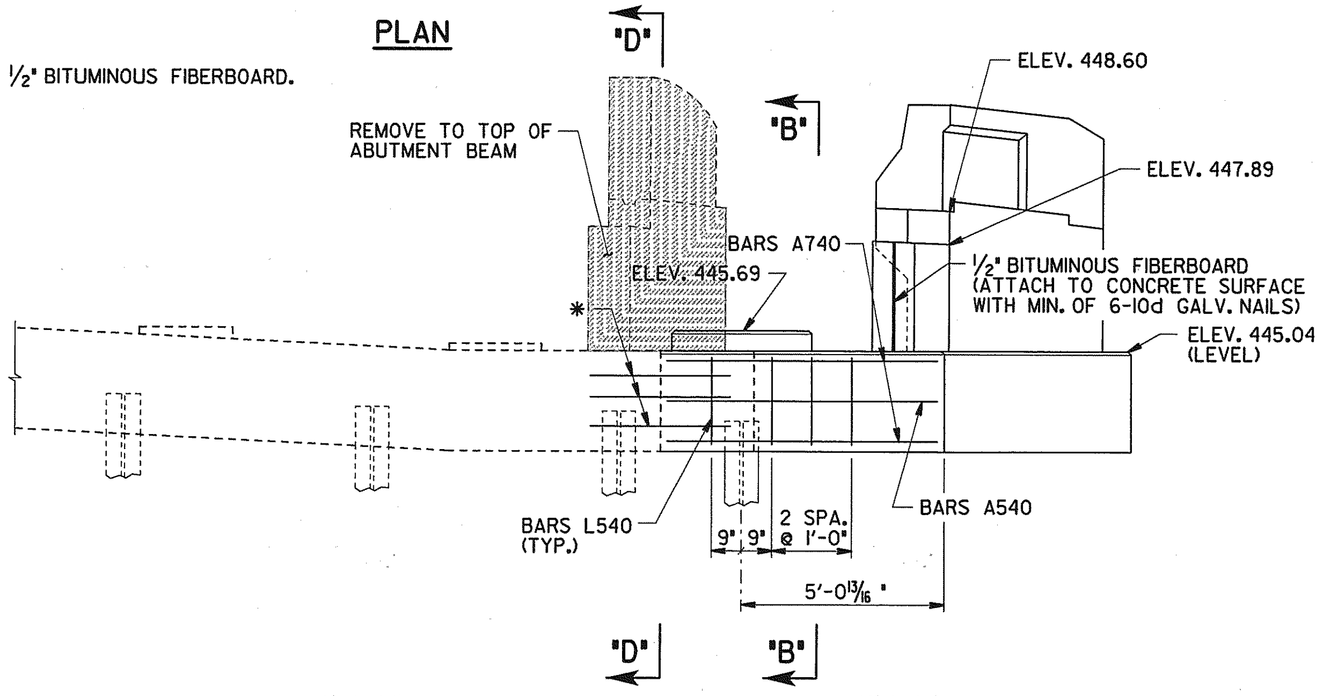

ELEVATION

(LOOKING FORWARD ON SURVEY)

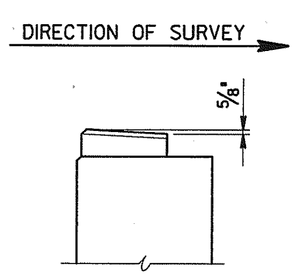

RISER BLOCK SLOPE DETAIL

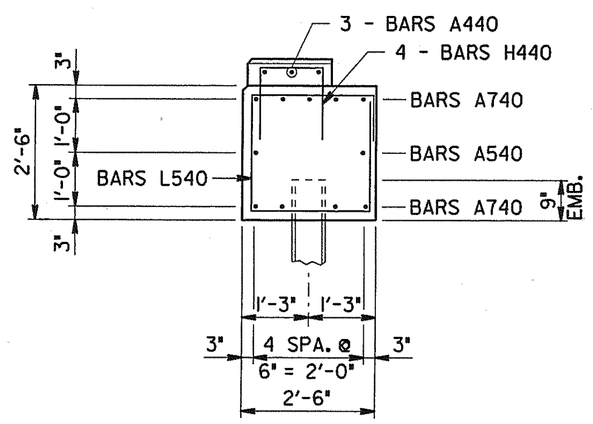

SECTION "B-B"

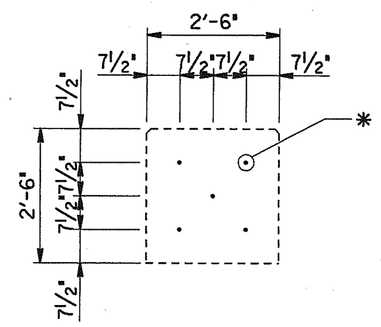

SECTION "D-D"

* INDICATES BARS DRILLED AND GROUTED INTO EXISTING CAP BEAM WITH 1'-9" EMBEDMENT. (BARS A742)

NOTES:

1. E - INDICATES BARS TO BE EPOXY COATED.
   N.S. - INDICATES NEAR SIDE
   F.S. - INDICATES FAR SIDE
   E.F. - INDICATES EACH FACE
2. WHEN POURING THE WINGWALLS, PROVISIONS SHALL BE MADE FOR SETTING REINFORCING STEEL FOR THE WINGPOSTS AND PARAPETS. FOR DETAILS OF WINGPOSTS AND PARAPETS SEE STANDARD DWG. STD-1-1.
3. RISER BLOCKS TO BE POURED MONOLITHCALLY WITH ABUTMENT BEAM.
4. BRIDGE SEAT ELEVATIONS ARE GIVEN AT THE INTERSECTION OF ℄ BEAM AND ℄ BEARING.
5. ELASTOMERIC PADS SHALL BE IN PLACE A MINIMUM OF ONE DAY BEFORE BEING DISTURBED BY SETTING BEAMS. PLACE RUBBER BONDING CEMENT IN SUCH A WAY THAT VISIBLE CONCRETE SURFACES WILL NOT BE STAINED.
6. FOR DRAINAGE DETAILS, SEE STD. DWG. NO. STD-10-1.
7. SEE STD. DWG. STD-6-1 FOR PILE DETAILS AND NOTES.
8. COST OF BRIDGE RAIL AND POST IS TO BE INCLUDED IN THE UNIT PRICE BID FOR THE BRIDGE RAIL SYSTEM.
9. OUTSIDE EDGE OF SLAB AND BRIDGE RAIL TO CONFORM TO HORIZONTAL CURVE.

CONST. NO. 19005-3153-44

PROJECT NO.	YEAR	SHEET NO.
IM-40-4(73)206	2002	

REVISIONS

NO.	DATE	BY	BRIEF DESCRIPTION
1	1-10-02	W.A.P.	ADDED RISER BLOCK PLAN VIEW

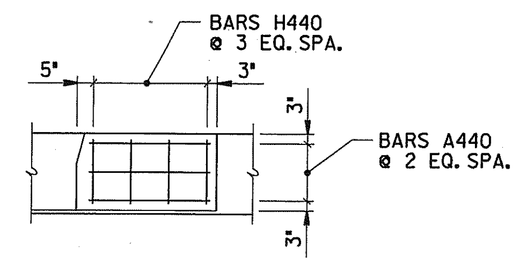

TYPICAL PLAN OF RISER BLOCK Δ

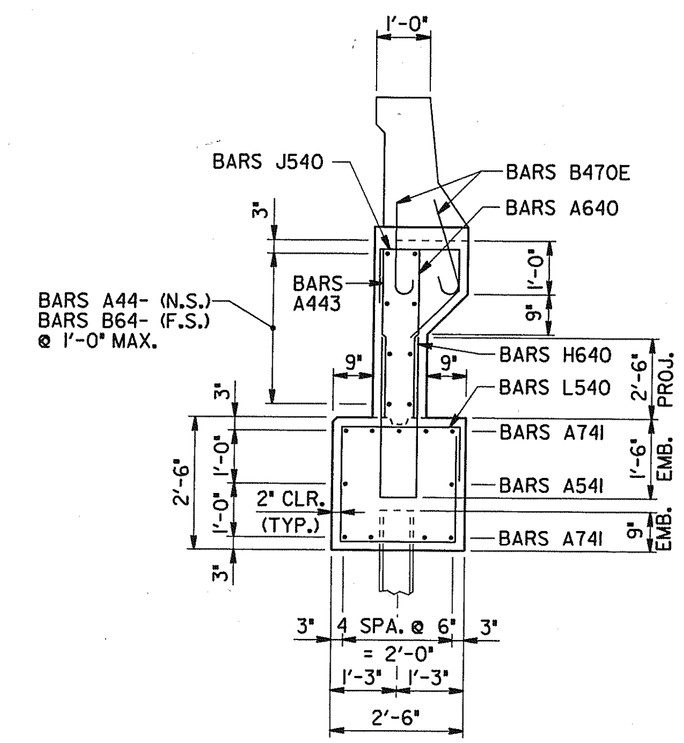

SECTION "C-C"

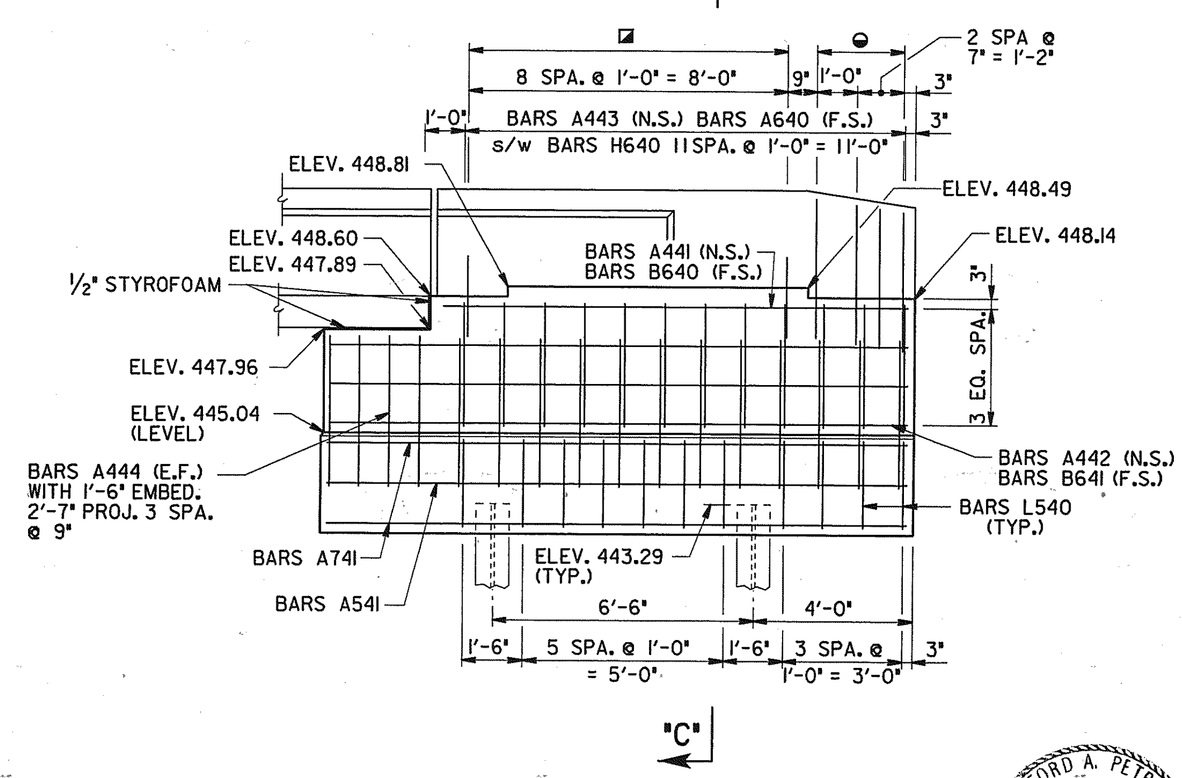

ELEVATION "A-A"

◒ DENOTES: BARS A470E (E.F.)

◪ DENOTES: BARS B470E (E.F.)

ESTIMATED QUANTITIES

CLASS "A" CONCRETE (BRIDGES) C.Y.	REINFORCING STEEL LBS.	EPOXY COATED REINFORCING STEEL LBS.
7	1,070	58

STATE OF TENNESSEE
DEPARTMENT OF TRANSPORTATION

ABUTMENT NO. 2
WIDENING OF INTERSTATE 40
OVER
JO JOHNSON STREET
STATION 121+09.40 (LOG MI. 16.88)
BRIDGE ID. NO. 19I00400065 (RT. LN.)
DAVIDSON COUNTY
2002

M-427-81

DESIGNED BY W. PETRONE DATE 12/01
DRAWN BY LITTRELL, WILSON DATE 12/01
SUPERVISED BY PETRONE DATE 12/01
CHECKED BY WILSON, PETRONE DATE 12/01

TWilson
1/15/02
pw:pw43
Projects
D:\LOCAL\FILL\9000\27ITI_583949_8384940b2_TWilson.prf

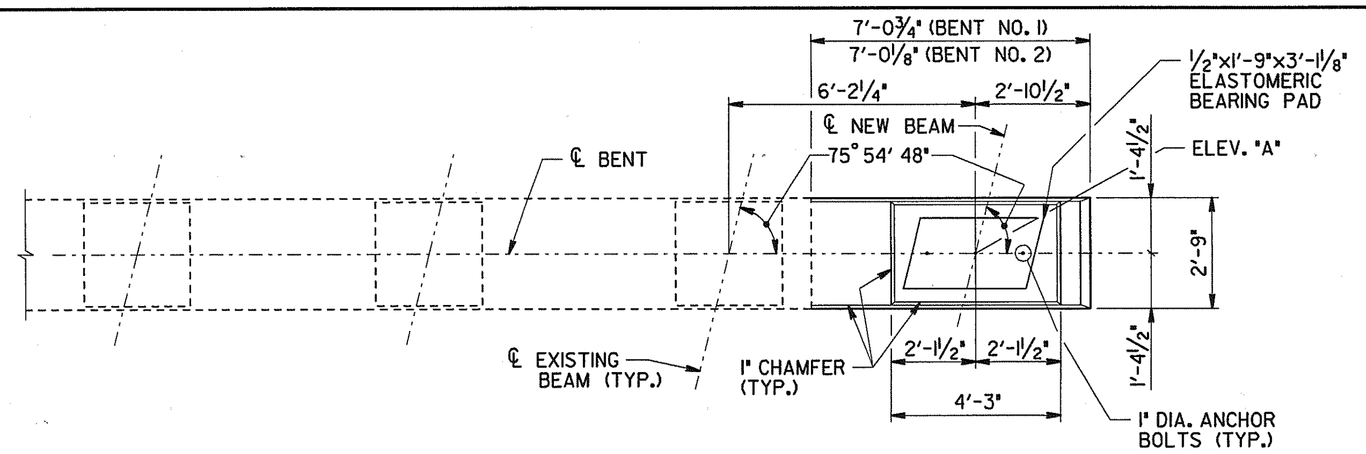

PLAN

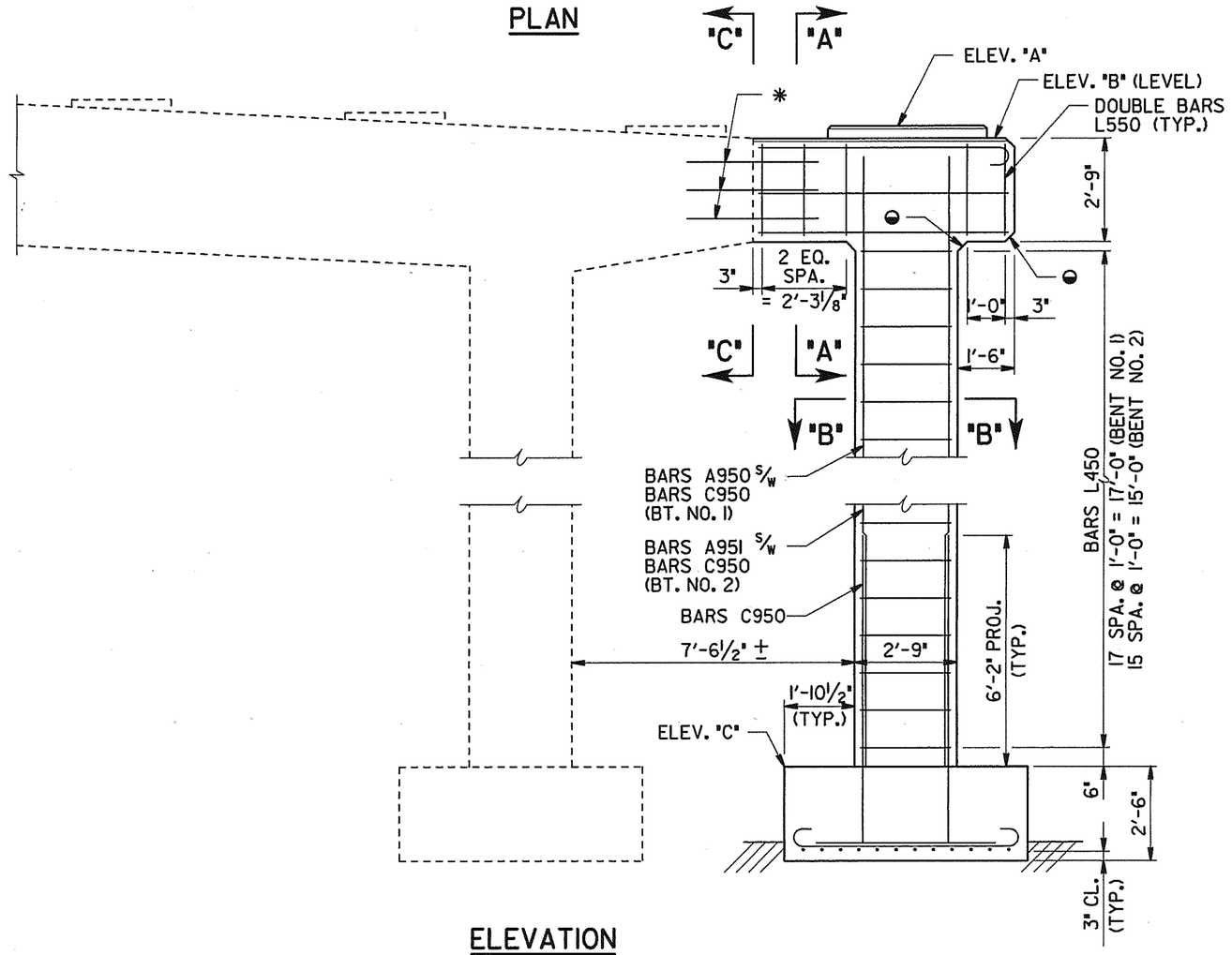

ELEVATION

(LOOKING FORWARD ON SURVEY)

◒ - INDICATES 3" CHAMFER OR FILLET.

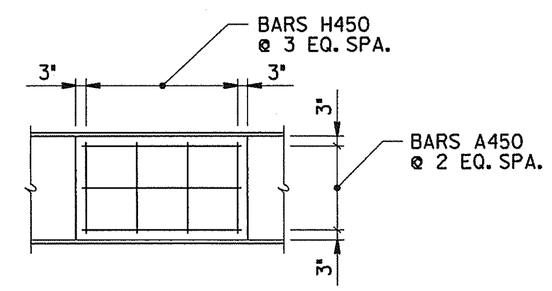

TYPICAL PLAN OF RISER BLOCK △1

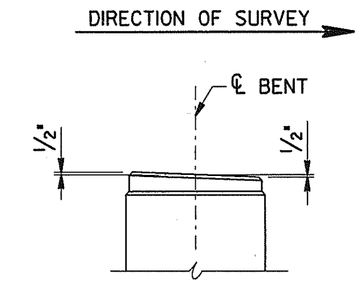

RISER BLOCK SLOPE DETAIL

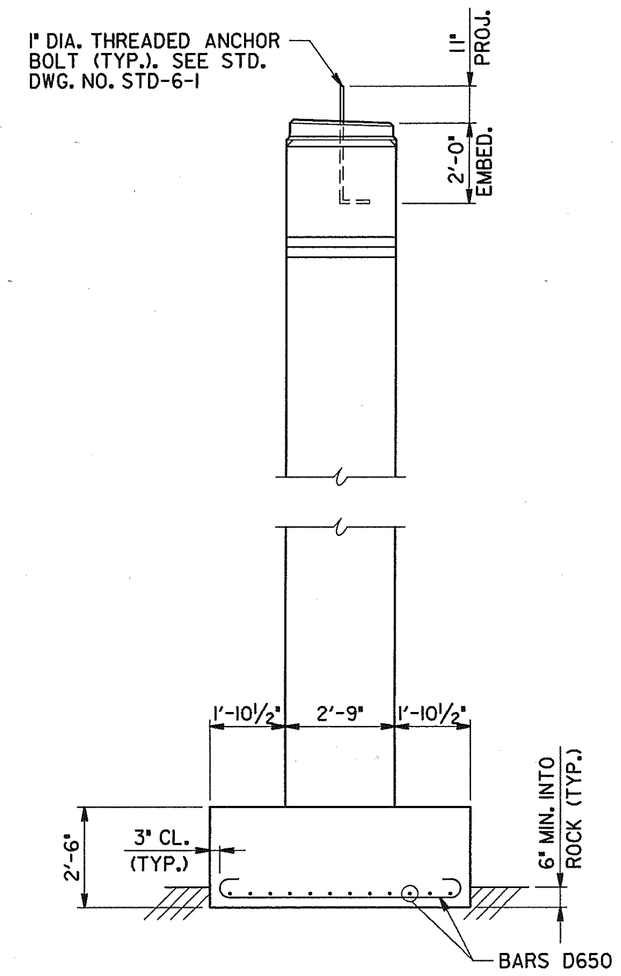

END ELEVATION

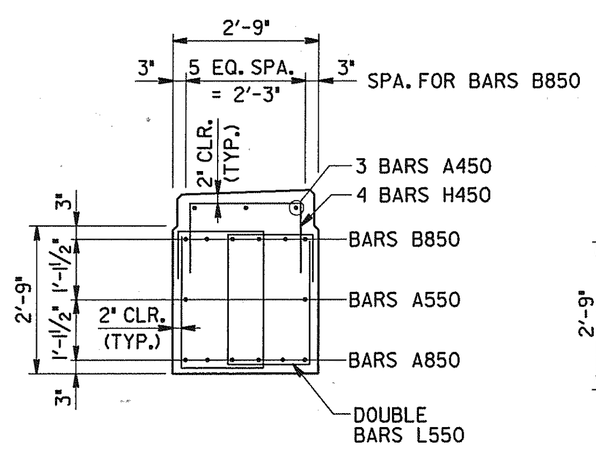

SECTION "A-A" △1

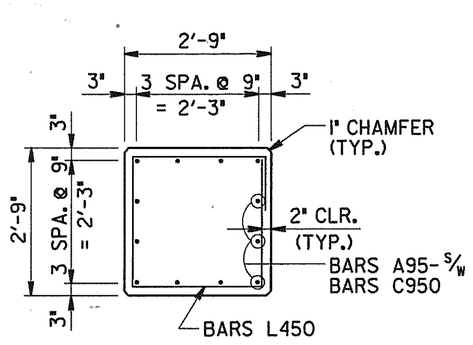

SECTION "B-B"

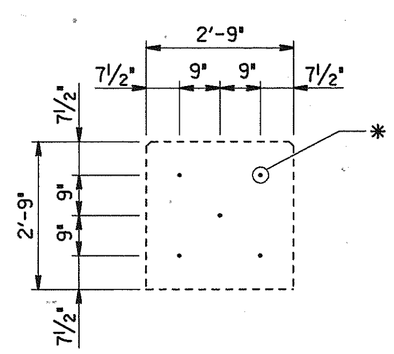

SECTION "C-C"

* INDICATES BARS DRILLED AND GROUTED INTO EXISTING CAP BEAM WITH 1'-9" EMBEDMENT. (BARS A750)

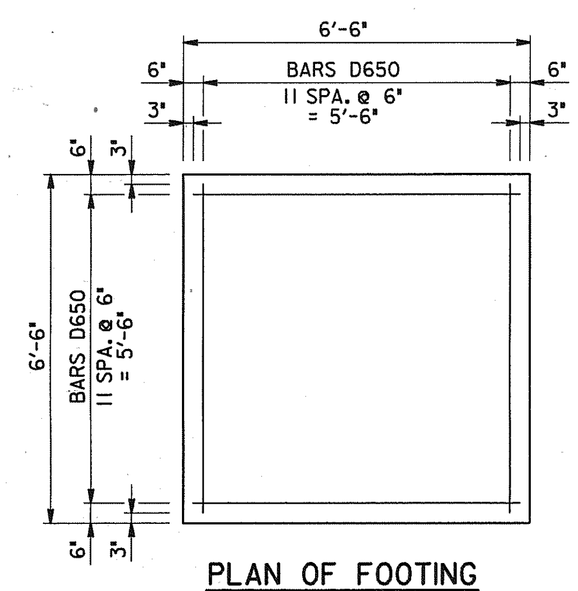

PLAN OF FOOTING

(SHOWING REINFORCEMENT)

CONST. NO. 19005-3153-44

PROJECT NO.	YEAR	SHEET NO.
IM-40-4(73)206	2002	

REVISIONS

NO.	DATE	BY	BRIEF DESCRIPTION
1	1-10-02	W.A.P.	ADDED RISER BLOCK PLAN VIEW AND REVISED SECTION "A-A"

NOTE: WHEN POURING CAP BEAM, PROVISIONS SHALL BE MADE FOR SETTING ANCHOR BOLTS. BOLT PROJECTION 11". SEE STANDARD DRAWING STD-6-1.

NOTE: RISER BLOCKS TO BE POURED MONOLITHICALLY WITH CAP BEAM.

NOTE: COLUMN STEEL TO EXTEND 2'-3" INTO CAP BEAM.

NOTE: ELEVATIONS GIVEN AT ℄ BENT AND ℄ BEAM.

NOTE: ELASTOMERIC PADS SHALL BE IN PLACE A MINIMUM OF ONE DAY BEFORE BEING DISTURBED BY SETTING BEAMS. PLACE RUBBER BONDING CEMENT IN SUCH A WAY THAT VISIBLE CONCRETE SURFACES WILL NOT BE STAINED.

NOTE: RISER BLOCK BEARING SURFACE TO CONFORM TO BOTTOM OF BEAM GRADE.

TABLE OF STATIONS AND ELEVATIONS

ITEM	STATION	"A"	"B"	"C"
BENT NO. 1	120+82.44	449.45	448.71	428.25
BENT NO. 2	121+47.89	447.30	446.54	428.00

NOTE: STATIONS GIVEN AT ℄ BENT AND ℄ BEAM.

ESTIMATED QUANTITIES

ITEM	CLASS "A" CONCRETE C.Y.	REINFORCING STEEL LBS.
BENT NO. 1	12	2,009
BENT NO. 2	11	1,917

STATE OF TENNESSEE
DEPARTMENT OF TRANSPORTATION

BENT NOS. 1 AND 2
WIDENING OF INTERSTATE 40
OVER
JO JOHNSON STREET
STATION 121+09.40 (LOG MI. 16.88)
BRIDGE ID. NO. 19100400065 (RT. LN.)
DAVIDSON COUNTY
2002

M-427-82

DESIGNED BY W. PETRONE DATE 12/01
DRAWN BY LITTRELL, WILSON DATE 12/01
SUPERVISED BY PETRONE DATE 12/01
CHECKED BY WILSON, PETRONE DATE 12/01

TWilson
1/10/02
09:07:02
PW:C:\Pwwork\dms15
DGN:C:\CELL\CELL\SGNDX2370.1583849,.8384984=1,TWilson.pmf

CONST. NO. 19005-3153-44

PROJECT NO.	YEAR	SHEET NO.
IM-40-4(73)206	2002	

REVISIONS

NO.	DATE	BY	BRIEF DESCRIPTION

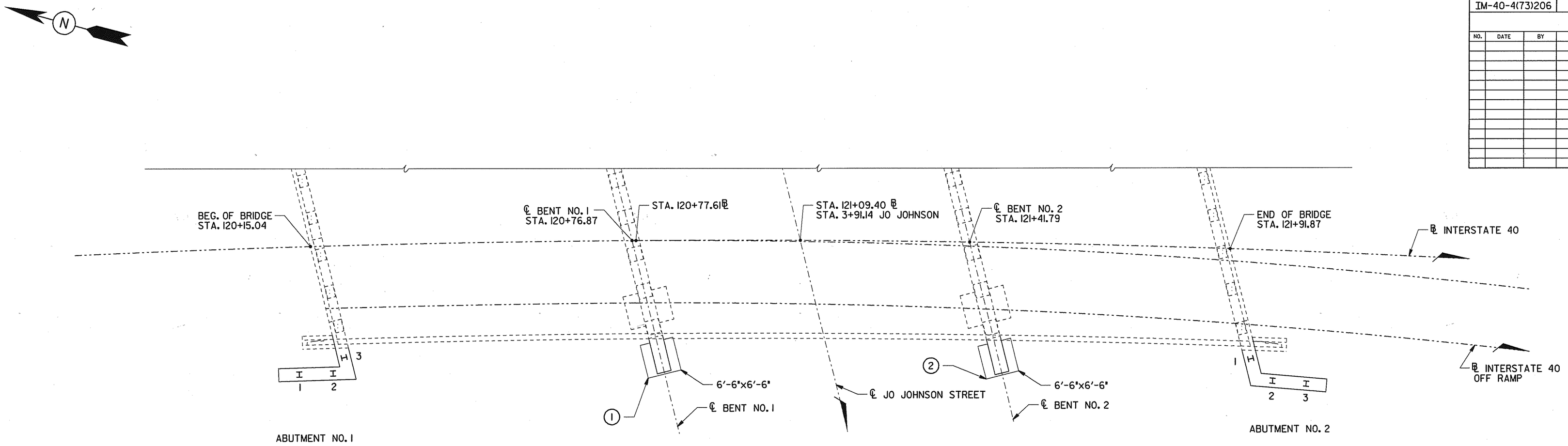

PLAN

TABLE SHOWING PILE NOS., P.C.O. ELEV. AND PILE LENGTHS

		PILE NUMBER		
		1	2	3
ABUTMENT NO. 1	P.C.O. ELEVATION			
	PILE TIP ELEVATION			
	IN PLACE PILE LENGTH			
ABUTMENT NO. 2	P.C.O. ELEVATION			
	PILE TIP ELEVATION			
	IN PLACE PILE LENGTH			

TABLE SHOWING FOOTING ELEVATIONS

	1	2
FINAL TOP OF FOOTING ELEV.		
FINAL BOTTOM OF FOOTING ELEV.		

WINFORD A. PETRONE
REGISTERED ENGINEER
AGRICULTURE
ENGINEERING
NO. 13,774
STATE OF TENNESSEE

STATE OF TENNESSEE
DEPARTMENT OF TRANSPORTATION

FINAL FOUNDATION DATA
WIDENING OF INTERSTATE 40
OVER
JO JOHNSON STREET
STATION 121+09.40 (LOG MI. 16.88)
BRIDGE ID. NO. 19I00400065 (RT. LN.)
DAVIDSON COUNTY
2002

M-427-83

DESIGNED BY W. PETRONE DATE 12/01
DRAWN BY T. WILSON DATE 12/01
SUPERVISED BY W. PETRONE DATE 12/01
CHECKED BY WILSON, PETRONE DATE 12/01

twwilson
12/10/01
10:07 am
Plot: 1 copies
DN:\LOCALVOLL\BRIDGE\24953.583849.838491f62.twwilson.prf

BILL OF STEEL

SUPERSTRUCTURE

BAR	LOCATION	SIZE	NO. REQ'D	BENDING DIMENSIONS A	B	C	D	LENGTH
			EPOXY					
SER. A400E	SLAB	4	1	BARS VARY IN LENGTH FROM 9'-7½" TO 8'-3" IN INC. OF ⅛" (133 BARS)				1188'-8"
A401E	SLAB	4	81					8'-4"
SER. A402E	SLAB	4	1	BARS VARY IN LENGTH FROM 8'-3⅝" TO 8'-7" IN INC. OF 1/16" (55 BARS)				464'-4"
SER. A403E	SLAB	4	1	BARS VARY IN LENGTH FROM 8'-7" TO 9'-5" IN INC. OF ⅛" (81 BARS)				729'-0"
SER. A404E	SLAB	4	1	BARS VARY IN LENGTH FROM 9'-5" TO 10'-6 9/16" IN INC. OF 7/16" (32 BARS)				319'-5"
A500E	SLAB	5	147					30'-0"
A501E	SLAB	5	21					11'-3"
A502E	SLAB	5	2					11'-6"
A503E	SLAB	5	2					12'-6"
A900E	SLAB	9	18					27'-0"
SER. B400E	SLAB	4	1	BARS VARY IN LENGTH FROM 9'-7½" TO 8'-3" IN INC. OF ⅛" (133 BARS)				1255'-2"
B401E	SLAB	4	81	8'-4"				8'-10"
SER. B402E	SLAB	4	1	BARS VARY IN LENGTH FROM 8'-3⅝" TO 8'-7" IN INC. OF 1/16" (55 BARS)				491'-10"
SER. B403E	SLAB	4	1	BARS VARY IN LENGTH FROM 8'-7" TO 9'-5" IN INC. OF ⅛" (81 BARS)				769'-6"
SER. B404E	SLAB	4	1	BARS VARY IN LENGTH FROM 9'-5" TO 10'-6 9/16" IN INC. OF 7/16" (32 BARS)				335'-5"

SUPERSTRUCTURE

BAR	LOCATION	SIZE	NO. REQ'D	BENDING DIMENSIONS A	B	C	D	LENGTH
H500E	ENDWALL	5	23	6"	2'-10"			6'-2"
R600E	ENDWALL	6	23	3'-2"	2'-9"			5'-11"
B471E	SLAB	4	354	2'-5"				2'-11"
			REGULAR					
A400	RDWY. BKT.	4	1					9'-7"
A401	RDWY. BKT.	4	1					10'-9"
A500	DIAPHRAGM	5	12					6'-8"
A501	DIAPHRAGM	5	6					2'-6"
A502	ENDWALL	5	12					2'-6"
A503	ENDWALL	5	6					10'-3"
A504	ENDWALL	5	6					11'-5"
H500	RDWY. BKT.	5	21	1'-5"	6"			2'-5"
H501	ENDWALL	5	23	6"	2'-9"			6'-0"
L400	DIAPHRAGM	4	10	6"	1'-0"	1'-11"		5'-10"
LS400	DIAPHRAGM	4	4	6"	1'-2"			4'-3"

ABUTMENT NO. 1

BAR	LOCATION	SIZE	NO. REQ'D	BENDING DIMENSIONS A	B	C	D	LENGTH
			EPOXY					
A470E	WINGWALL	4	8					3'-9"
B470E	WINGWALL	4	18	2'-5"				2'-11"
			REGULAR					
A440	RISER	4	3					3'-0"
A441	WINGWALL	4	1					11'-8"
A442	WINGWALL	4	3					14'-3"
A443	WINGWALL	4	12					3'-4"
A444	WINGWALL	4	8					4'-1"
A540	ABUT. BEAM	5	2					5'-11"
A541	WING BEAM	5	2					14'-2"
A640	WINGWALL	6	12					3'-4"
A740	ABUT. BEAM	7	9					5'-11"
A741	WING BEAM	7	9					14'-2"
A742	ABUT. BEAM	7	5					3'-6"
B640	WINGWALL	6	1	11'-8"				12'-4"
B641	WINGWALL	6	3	14'-2"				14'-10"
H440	RISER	4	4	1'-3"	1'-3"			3'-9"
H640	WINGWALL	6	12	8"	4'-0"			8'-8"
L540	BEAM	5	15	2'-2"	1'-0"	2'-2"		9'-8"
J540	WINGWALL	5	12	1'-5"	1'-0"	9"	1'-5"	4'-7"

CONST. NO. 19005-3153-44

PROJECT NO.	YEAR	SHEET NO.
IM-40-4(73)206	2002	

REVISIONS

NO.	DATE	BY	BRIEF DESCRIPTION

REINFORCING STEEL CODE

Type	Size	Series

NOTE: Dimensions shown on this sheet are outside to outside of Bar. Standard C.R.S.I. hook details shall apply.

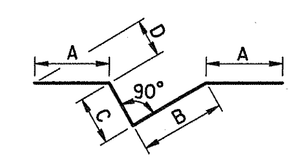

BARS JX

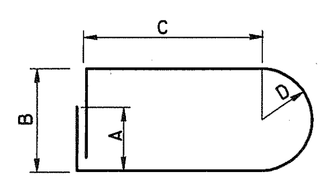

BARS X

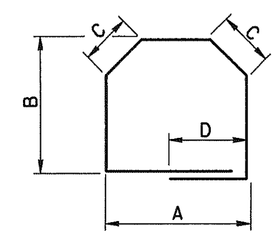

BARS M

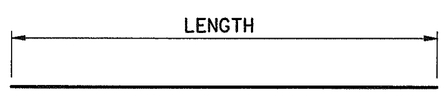

BARS A

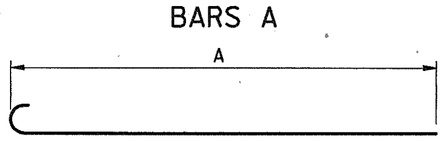

BARS B

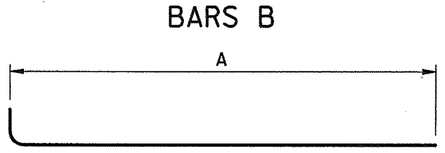

BARS C

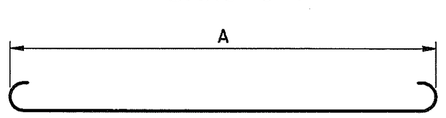

BARS D

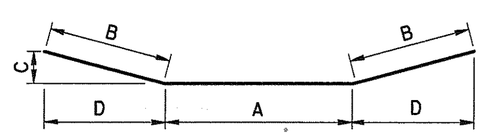

BARS E

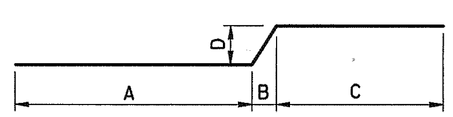

BARS F

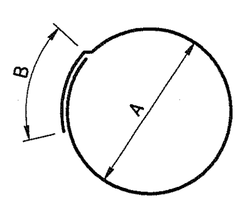

BARS T

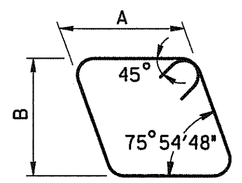

BARS LS

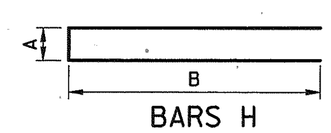

BARS H

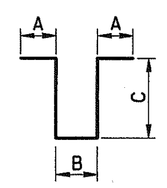

BARS K

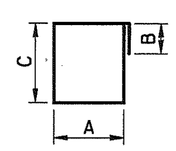

BARS L

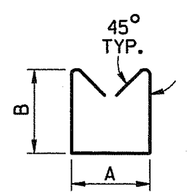

BARS S

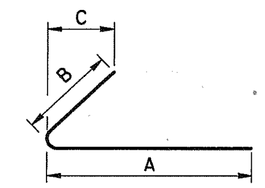

BARS CB

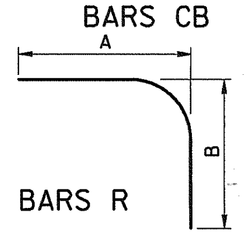

BARS R

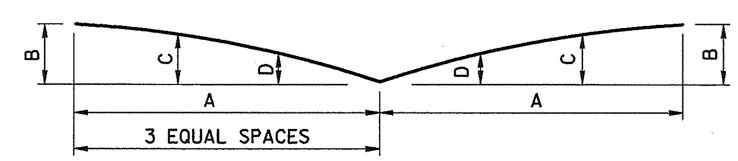

BARS V

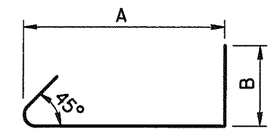

BARS YB

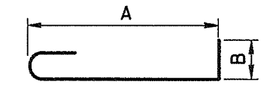

BARS YA

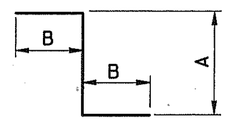

BARS Z

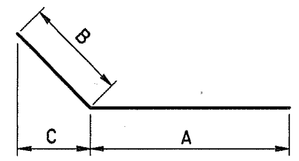

BARS CD

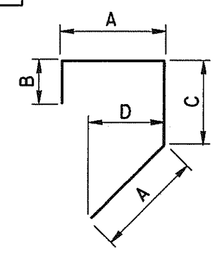

BARS J

STATE OF TENNESSEE
DEPARTMENT OF TRANSPORTATION

BILL OF STEEL
WIDENING OF INTERSTATE 40
OVER
JO JOHNSON STREET
STATION 121+09.40 (LOG MI. 16.88)
BRIDGE ID. NO. 19I00400065 (RT. LN.)
DAVIDSON COUNTY
2002

WINFORD A. PETRONE
REGISTERED ENGINEER
NO. 13,774
STATE OF TENNESSEE

DESIGNED BY	W. PETRONE	DATE	12/01
DRAWN BY	t. wilson	DATE	12/01
SUPERVISED BY	PETRONE	DATE	12/01
CHECKED BY	WILSON, PETRONE	DATE	12/01

twilson
12/19/01
Plot - Copies
PLOT(1:1)=1.0000(in)=24953.6383949,8384990,1 twilson.prf

M-427-84

BILL OF STEEL

CONST. NO. 19005-3153-44

PROJECT NO.	YEAR	SHEET NO.
IM-40-4(73)206	2002	

REVISIONS

NO.	DATE	BY	BRIEF DESCRIPTION

ABUTMENT NO. 2

BAR	LOCATION	SIZE	NO. REQ'D	BENDING DIMENSIONS A	B	C	D	LENGTH
		EPOXY						
A470E	WINGWALL	4	8					3'-9"
B470E	WINGWALL	4	18	2'-5"				2'-11"
		REGULAR						
A440	RISER	4	3					3'-0"
A441	WINGWALL	4	1					11'-8"
A442	WINGWALL	4	3					14'-6"
A443	WINGWALL	4	12					2'-11"
A444	WINGWALL	4	8					4'-2"
A540	ABUT. BEAM	5	2					6'-10"
A541	WING BEAM	5	2					14'-4"
A640	WINGWALL	6	12					2'-11"
A740	ABUT. BEAM	7	9					6'-10"
A741	WING BEAM	7	9					14'-4"
A742	ABUT. BEAM	7	5					3'-6"
B640	WINGWALL	6	1	11'-8"				12'-4"
B641	WINGWALL	6	3	14'-8"				15'-4"
H440	RISER	4	4	1'-3"	1'-3"			3'-9"
H640	WINGWALL	6	12	8"	4'-0"			8'-8"
L540	BEAM	5	15	2'-2"	1'-0"	2'-2"		9'-8"
J540	WINGWALL	5	12	1'-5"	1'-0"	9"	1'-5"	4'-7"

BENT NO. 1

BAR	LOCATION	SIZE	NO. REQ'D	BENDING DIMENSIONS A	B	C	D	LENGTH
A450	RISER	4	3					3'-11"
A550	CAP BEAM	5	2					6'-8"
A750	CAP BEAM	7	5					3'-6"
A850	CAP BEAM	8	6					6'-8"
A950	COLUMN	9	12					20'-0"
B850	CAP BEAM	8	6	6'-8"				7'-7"
C950	FOOTING	9	12	8'-5"				10'-0"
D650	FOOTING	6	24	6'-0"				7'-4"
H450	RISER	4	4	2'-3"	1'-5"			5'-1"
L450	COLUMN	4	18	2'-5"	1'-0"	2'-5"		10'-8"
L550	CAP BEAM	5	10	1'-6½"	1'-0"	2'-5"		8'-11"

BENT NO. 2

BAR	LOCATION	SIZE	NO. REQ'D	BENDING DIMENSIONS A	B	C	D	LENGTH
A450	RISER	4	3					3'-11"
A550	CAP BEAM	5	2					6'-8"
A750	CAP BEAM	7	5					3'-6"
A850	CAP BEAM	8	6					6'-8"
A951	COLUMN	9	12					18'-1"
B850	CAP BEAM	8	6	6'-8"				7'-7"
C950	FOOTING	9	12	8'-5"				10'-0"
D650	FOOTING	6	24	6'-0"				7'-4"
H450	RISER	4	4	2'-3"	1'-5"			5'-1"
L450	COLUMN	4	16	2'-5"	1'-0"	2'-5"		10'-8"
L550	CAP BEAM	5	10	1'-6½"	1'-0"	2'-5"		8'-11"

REINFORCING STEEL CODE

Type	Size	Series

NOTE: Dimensions shown on this sheet are outside to outside of Bar. Standard C.R.S.I. hook details shall apply.

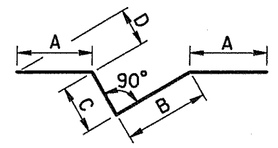

BARS JX

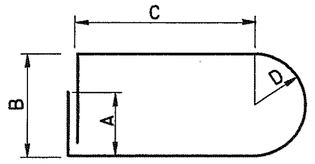

BARS X

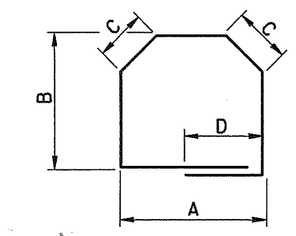

BARS M

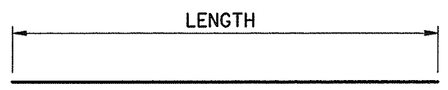

BARS A

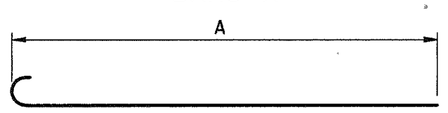

BARS B

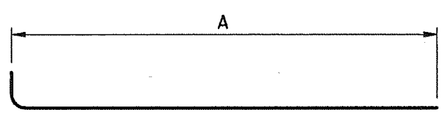

BARS C

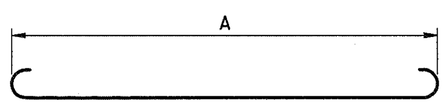

BARS D

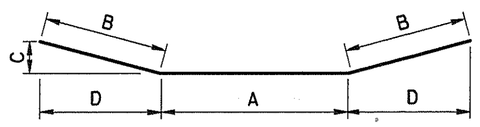

BARS E

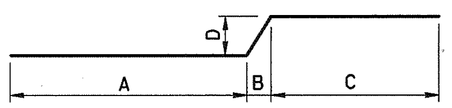

BARS F

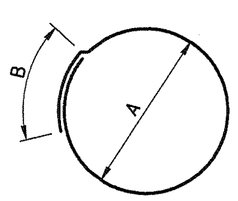

BARS T

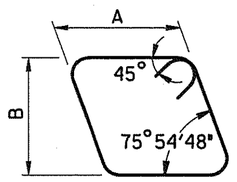

BARS LS

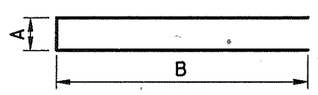

BARS H

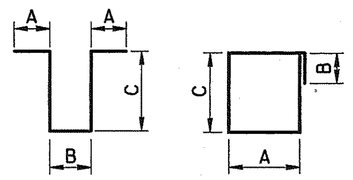

BARS K BARS L

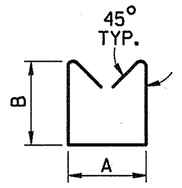

BARS S

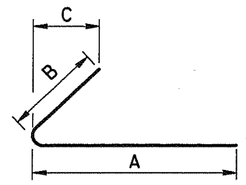

BARS CB

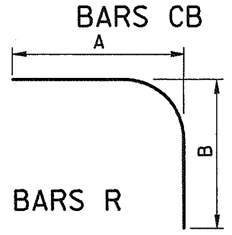

BARS R

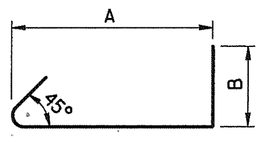

BARS YB

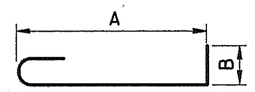

BARS YA

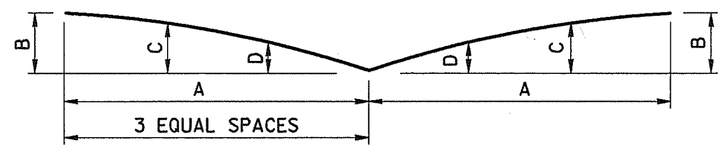

BARS V

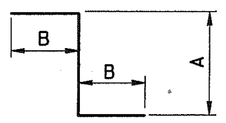

BARS Z

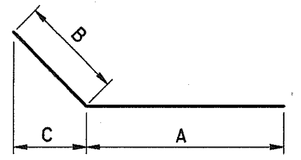

BARS CD

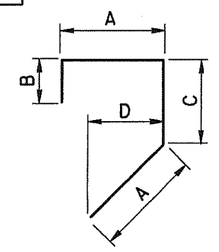

BARS J

STATE OF TENNESSEE
DEPARTMENT OF TRANSPORTATION

BILL OF STEEL
WIDENING OF INTERSTATE 40
OVER
JO JOHNSON STREET
STATION 121+09.40 (LOG MI. 16.88)
BRIDGE ID. NO. 19I00400065 (RT. LN.)
DAVIDSON COUNTY
2002

M-427-85

DESIGNED BY	W. PETRONE	DATE	12/01
DRAWN BY	T. WILSON	DATE	12/01
SUPERVISED BY	PETRONE	DATE	12/01
CHECKED BY	WILSON, PETRONE	DATE	12/01

twilson
12/07/01
Roboto
Plot Scale: 1
D:\LOCAL\FILL\GOVD\24953_583849_83849bs2_twilson.prf