FLOOR PLANS
ATTACHMENT 1

RT FLOOR PLAN 09

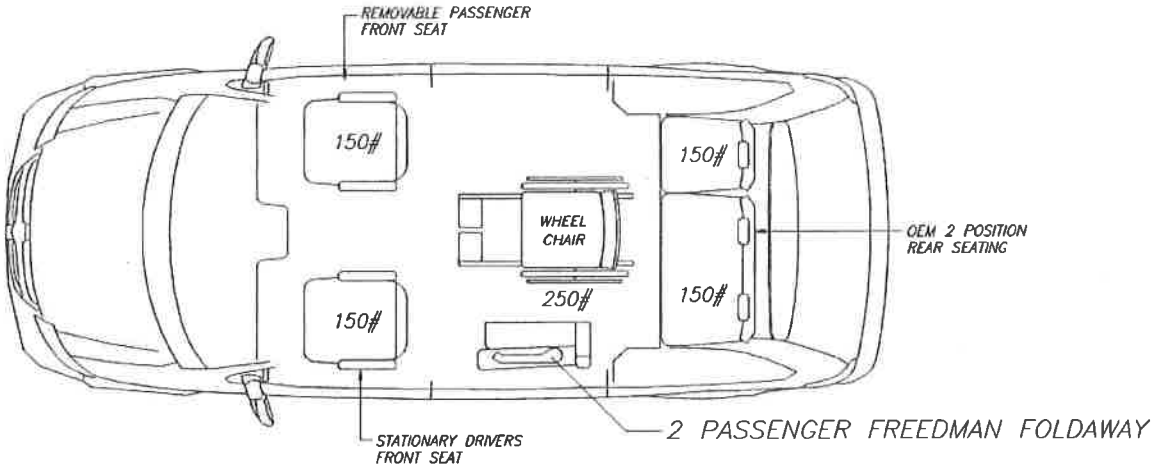

LAYOUT WITH 1 WHEELCHAIR

2 AMBULATORY REAR	2x150 = 300lb	6050lb	VEHICLE GVWR
1 WHEEL CHAIR MIDDLE	1x250 = 250lb	− 850lb	PAYLOAD
2 AMBULATORY FRONT	2x150 = 300lb	5200lb	MAX ALLOWABLE CURB WEIGHT
	TOTAL = 850lb	− 4744lb	ACTUAL WEIGHT W/ ALL SEATS
		456lb	UNDER MAX

NOTE: AMBULATORY 150lb
WHEELCHAIR & OCCUPANT 250lb

NEXT ASSEMBLY: NONE	DRAWING INFORMATION					
SUPERCEDES: NONE	DRAWN: GREEN	CKD:				
DO NOT SCALE DRAWING	DATE: 1/8/09	SIZE: A				
MARK PART NUMBER AND REVISION ON ALL PARTS	SCALE: 1:32	WGT:				
THIS DRAWING IS THE PROPERTY OF ELDORADO NATIONAL COMPANY, A THOR INDUSTRIES COMPANY AND IS NOT TO BE DUPLICATED OR USED IN ANY WAY DETRIMENTAL TO THEIR BEST INTEREST.	TOLERANCE UNLESS SPECIFIED					
	FRACTIONS ± 1/16 DECIMALS .00 ± .06 ANGLES ± 1 DEG.	-	SG	1/8/09	RELEASE TO PRODUCTION	
		REV.	BY	DATE	DESCRIPTION	RELEASE #

ElDorado National
— a THOR company —
1655 WALL STREET
SALINA, KS. 67401

TITLE:
2009 DODGE RT FLOOR PLAN
LAYOUT 09

MATERIAL SPEC:
N/A

PART NUMBER
RT FLOOR PLAN 09

PAGE
1 OF 1

LOWERED FLOOR MINIVAN

All seats rearward of the b pillar shall be forward facing. Each seat position shall be a minimum of 16" wide and 17" deep 3pt seat. Example: Freedman GOes fixed or forward facing folding or equal.

All seats: A minimum of 26" hip to knee room shall be provided. Grey 36 oz. Transportation grade vinyl. All metal components shall be powder coated and capable of meeting the following tests:

a. Salt spray 1000 hrs.
b. ASTM DL 17 humidity resistance 1000 hrs.
c. ASTM D2247 Impact resistance 1000 hrs.
d. ASTM D2794

WHEELCHAIR LIFT: Braun Century II or equal with installation meeting ADA and NHTSA.

WHEELCHAIR TIE DOWNS:

a. Q-Straint QRT Deluxe with 3 pt occupant restraints and L track anchorage.
b. Flush L track minimum 36" wide for rear anchorage. L track or L pods for front anchorage spaced a minimum 36' wide.
c. Front wheelchair position 48" long and rear wheelchair position minimum 52" long.
d. The installation of these securement systems must be tested in the chassis being proposed (i.e. Ford Transit chassis) to withstand a force to each securement strap of 2,500 lbs. in a forward longitudinal direction and 5,000 lbs. for each mobility aid.

INTERNATIONAL SIGN FOR ACCESSABILITY: Two adhesive backed 14' X 14" international signs for accessibility shall be shipped loose inside the van.

INTERIOR LIGHTING:

a. Vehicle interior shall be illuminated by a minimum of 3 L.E.D. light fixtures.
b. Lighting fixtures shall be controlled by the chassis OEM lighting switch.
c. Opening any door shall automatically illuminate the interior for as long as the doors are open.
d. 2 L.E.D. side passenger door stepwell lights shall be provided.

PRIORITY SEATING SIGNS:

Vehicle shall contain a sigh which indicates that seats in the front of the vehicle are priority seats for persons with disabilities.

FLOORPLAN:

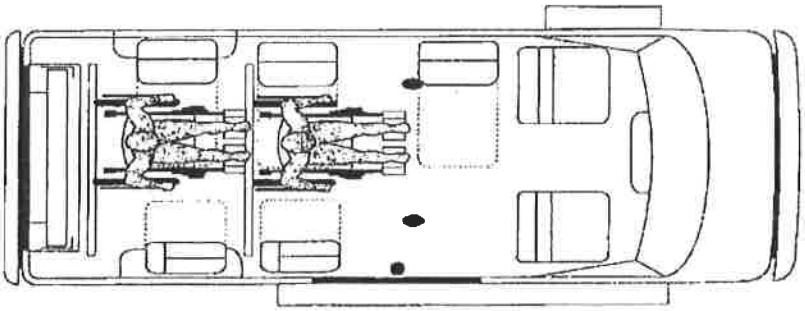

EXTENDED LENGTH ADA VAN

- All seats rearward of the b pillar shall be forward facing. Each seat position shall be a minimum of 16" wide and 17" deep 3pt seat. Example: Freedman GOes fixed and forward facing folding seats or equal.
- All seats: A minimum of 26" hip to knee room shall be provided. Grey 36 oz. Transportation grade vinyl. All metal components shall be powder coated and capable of meeting the following tests:
    a. Salt spray 1000 hrs.
    b. ASTM DL 17 humidity resistance 1000 hrs.
    c. ASTM D2247 Impact resistance 1000 hrs.
    d. ASTM D2794

WHEELCHAIR LIFT: Braun Century II or equal with installation meeting ADA and NHTSA.

WHEELCHAIR TIE DOWNS:

a. Q-Straint QRT Deluxe with 3 pt occupant restraints and L track anchorage.
b. Flush L track minimum 36" wide for rear anchorage. L track or L pods for front anchorage spaced a minimum 36' wide.
c. Front wheelchair position 48" long and rear wheelchair position minimum 52" long.
d. The installation of these securement systems must be tested in the chassis being proposed (i.e. Ford Transit chassis) to withstand a force to each securement strap of 2,500 lbs. in a forward longitudinal direction and 5,000 lbs. for each mobility aid.

INTERNATIONAL SIGN FOR ACCESSABILITY: Two adhesive backed 14' X 14" International signs for accessibility shall be shipped loose inside the van.

INTERIOR LIGHTING:

a. Vehicle interior shall be illuminated by a minimum of 3 L.E.D. light fixtures.
b. Lighting fixtures shall be controlled by the chassis OEM lighting switch.
c. Opening any door shall automatically illuminate the interior for as long as the doors are open.
d. 2 L.E.D. side passenger door stepwell lights shall be provided.

PRIORITY SEATING SIGNS:

Vehicle shall contain a sigh which indicates that seats in the front of the vehicle are priority seats for persons with disabilities.

FLOORPLAN:

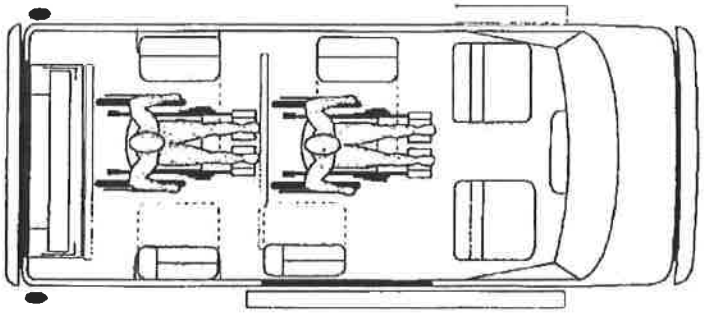

STANDARD LENGTH
ADA LIFT VAN

BASE VEHICLE FLOOR PLAN

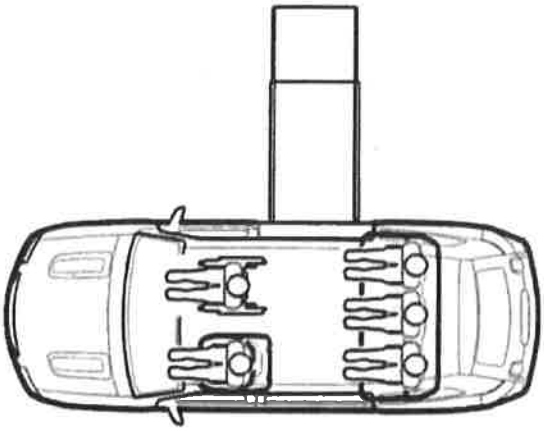

VEHICLE FLOOR PLAN with Optional Jump Seat

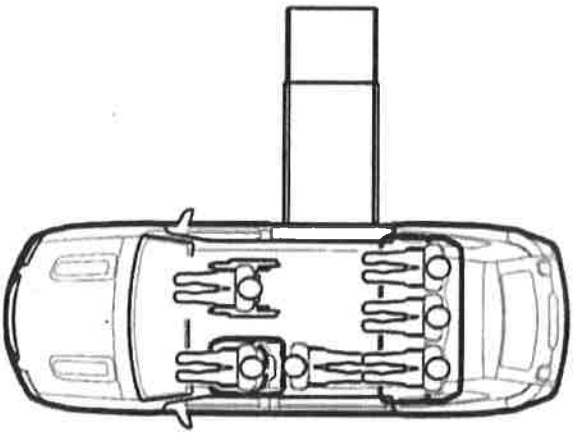

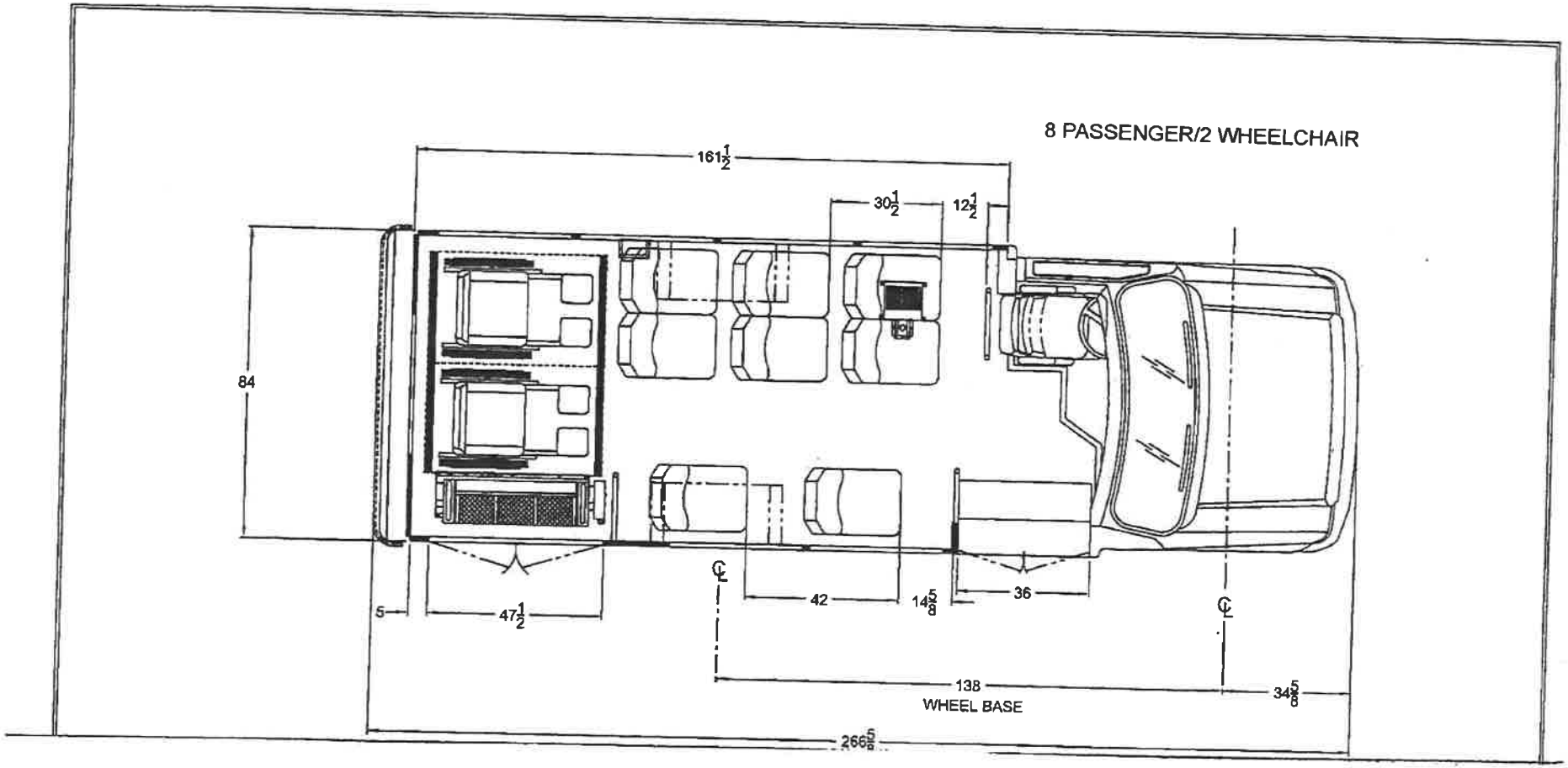
8 PASSENGER/2 WHEELCHAIR
161 1/2
30 1/2
12 1/2
84
5
47 1/2
42
14 5/8
36
138
WHEEL BASE
34 5/8
266 5/8

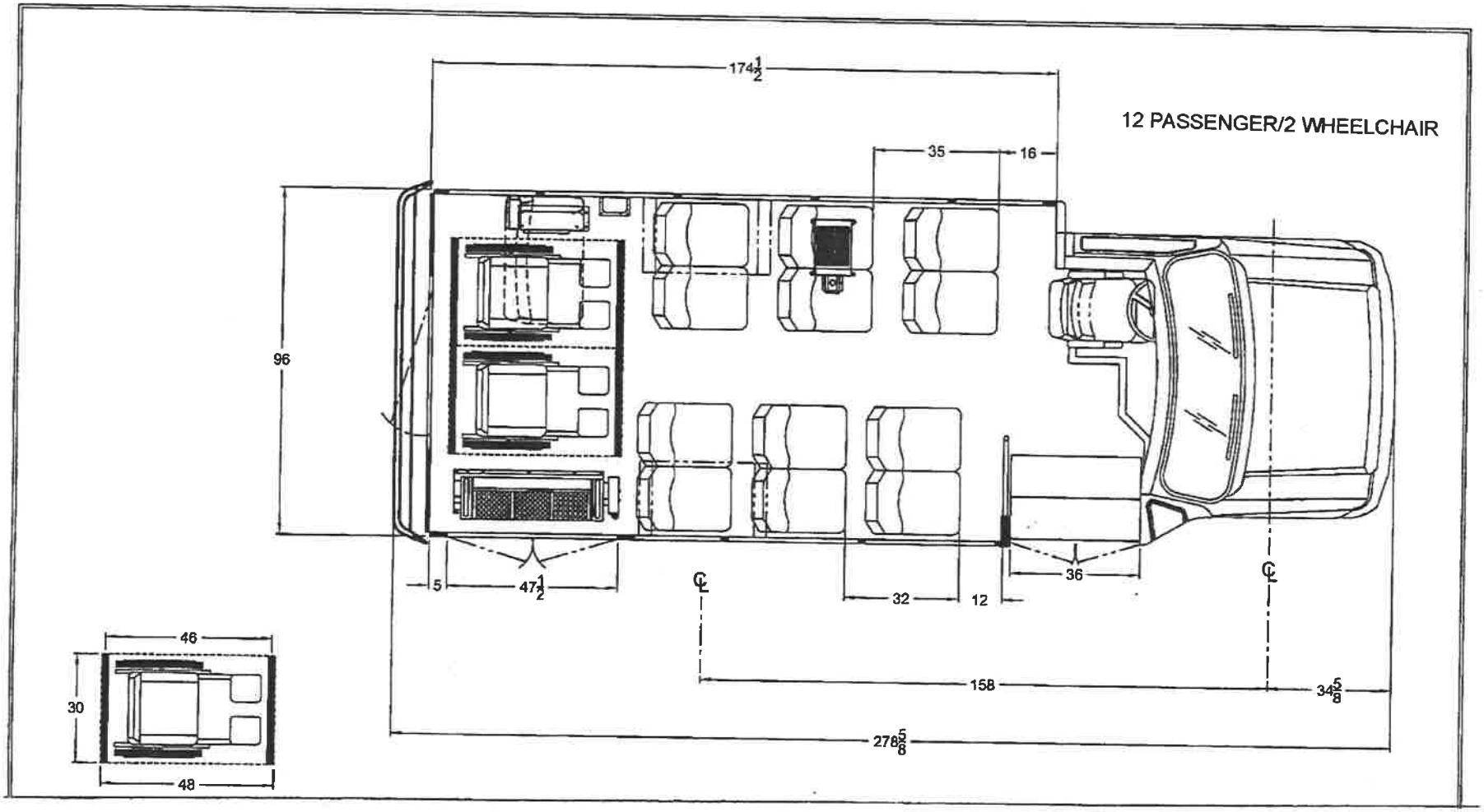
12 PASSENGER/2 WHEELCHAIR
174 1/2
35
16
96
5
47 1/2
32
12
36
158
34 5/8
278 5/8
46
30
48

10 PASSENGER/2 WHEELCHAIR

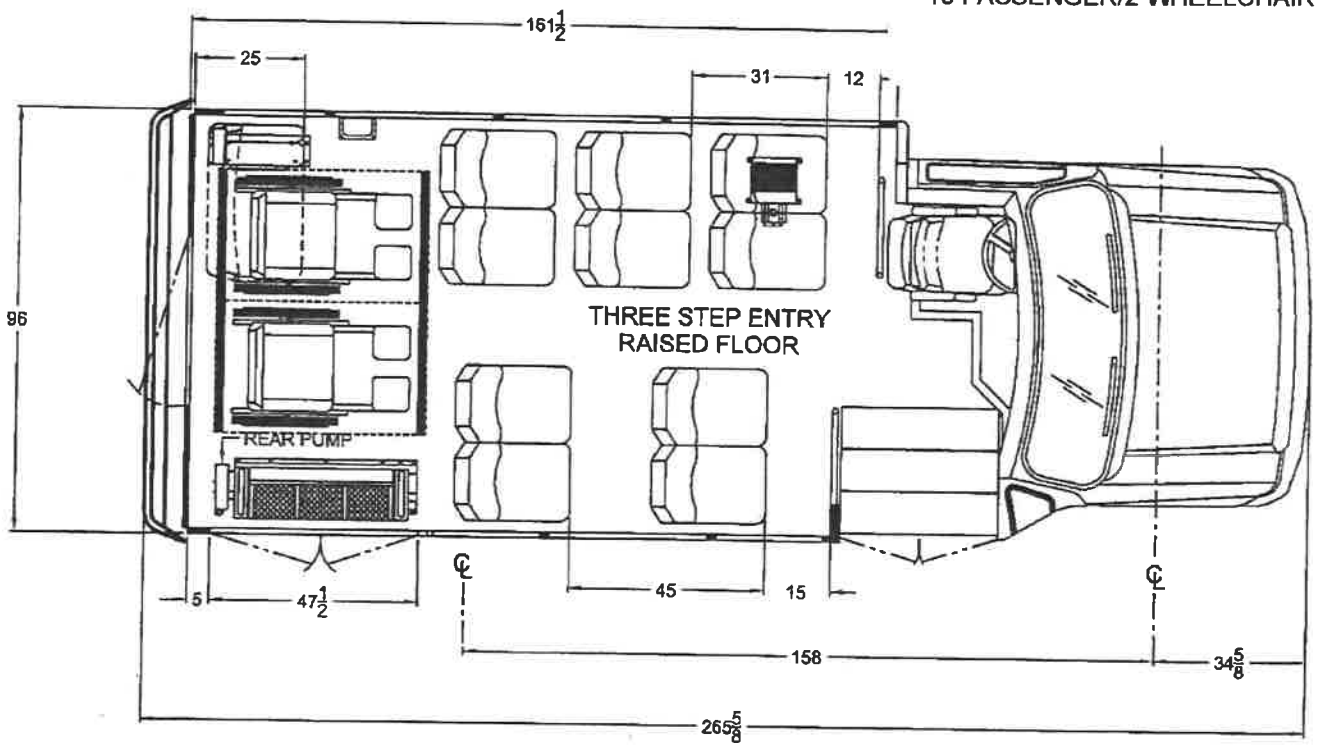

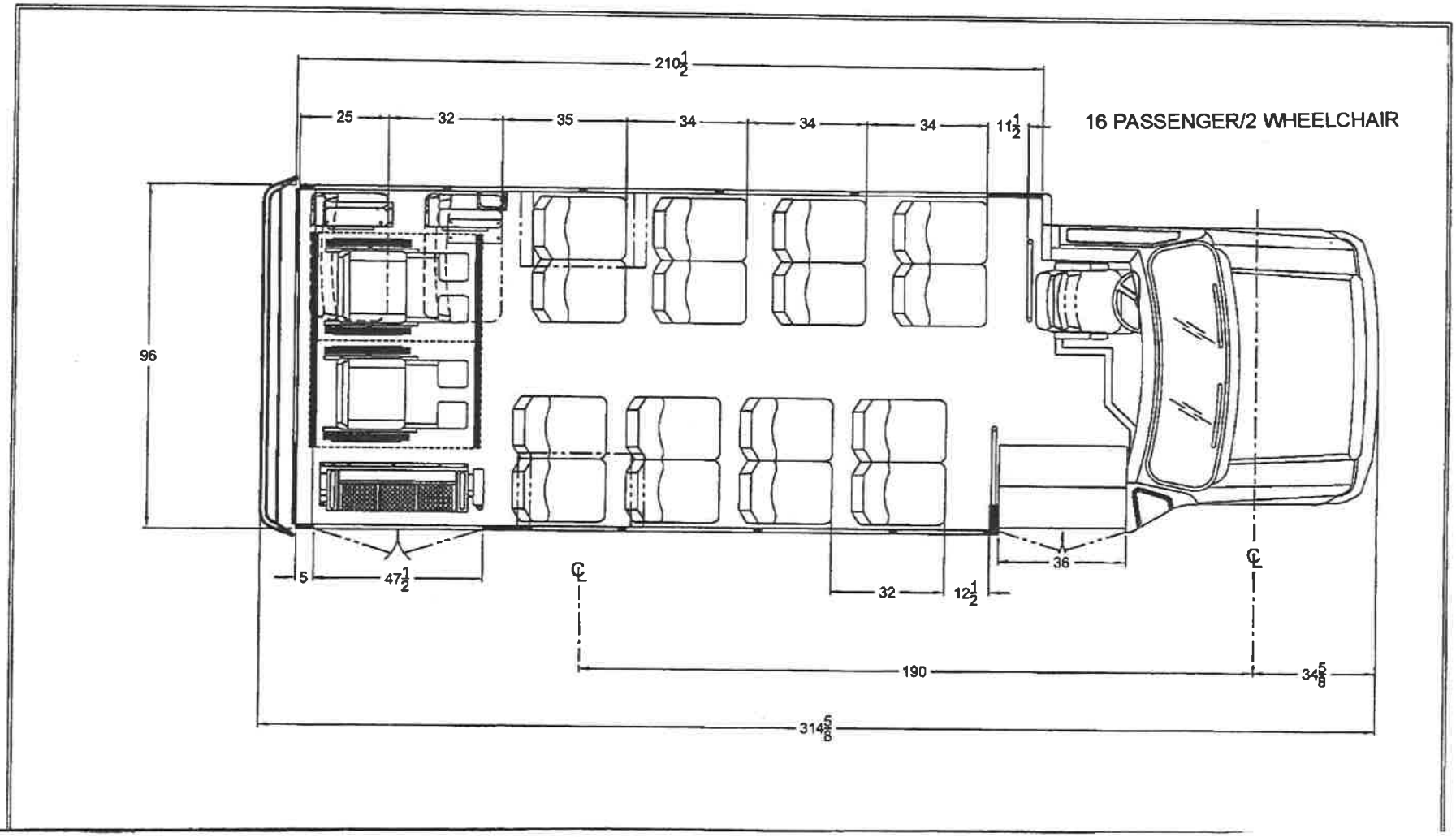
16 PASSENGER/2 WHEELCHAIR
210 1/2
25
32
35
34
34
34
11 1/2
96
5
47 1/2
32
12 1/2
36
190
34 5/8
314 5/8

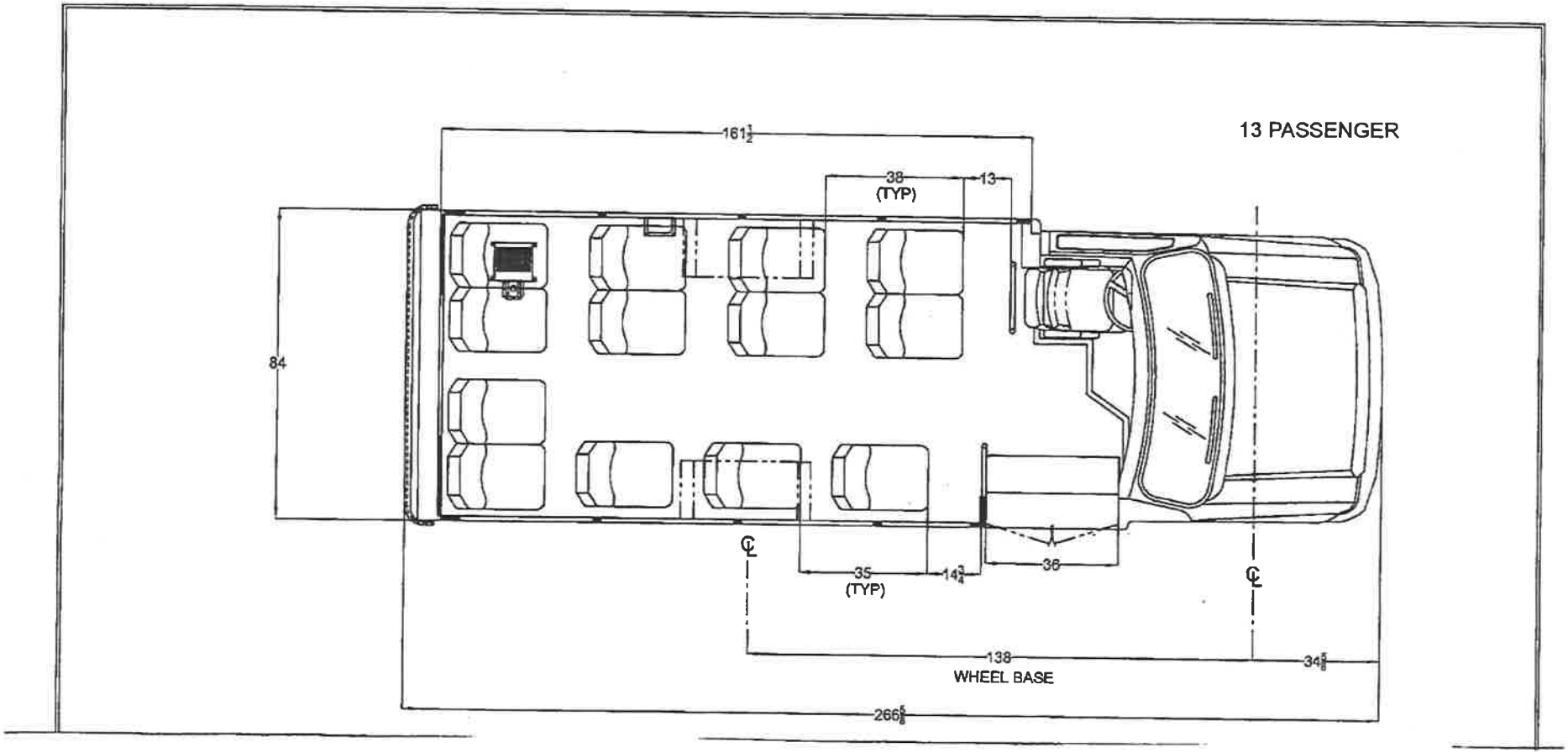
13 PASSENGER
161½
38
(TYP)
13
84
35
(TYP)
14¾
36
138
WHEEL BASE
34⅝
266⅝

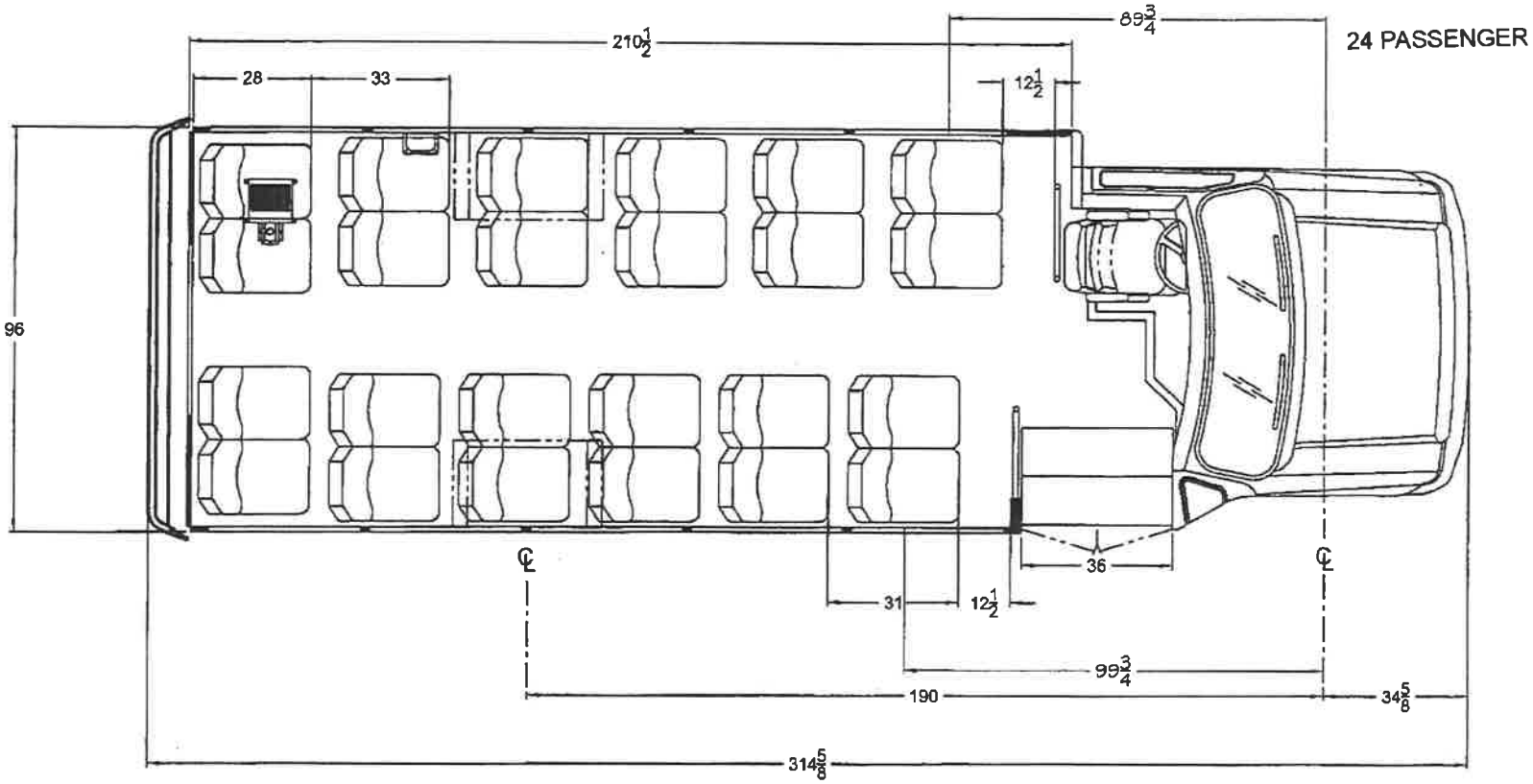
24 PASSENGER
210 1/2
28
33
89 3/4
12 1/2
96
36
31
12 1/2
99 3/4
190
34 5/8
314 5/8

All seats: A minimum of 26" hip to knee room shall be provided. Grey 36 oz. transportation grade vinyl. All metal components shall be powder coated and capable of meeting the following tests:

a. Salt spray 1000 hrs.
b. ASTM DL 17 humidity resistance 1000 hrs.
c. ASTM D2247 Impact resistance 1000 hrs.
d. ASTM D2794

If non OEM seating accommodating 4 passengers does not fit in the rearmost row then OEM grey vinyl seating may be used in this row only.

INTERIOR LIGHTING:

a. Vehicle interior shall be illuminated by a minimum of 3 L.E.D. light fixtures.
b. Lighting fixtures shall be controlled by the chassis OEM lighting switch.
c. Opening any door shall automatically illuminate the interior for as long as the doors are open.
d. 2 L.E.D. side passenger door stepwell lights shall be provided.

PRIORITY SEATING SIGNS:

a. Vehicle shall contain a sigh which indicates that seats in the front of the vehicle are priority seats for persons with disabilities.

FLOORPLAN:

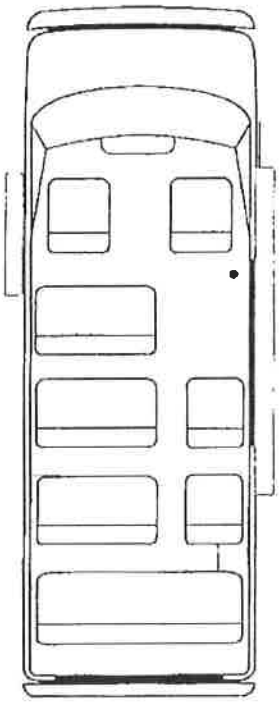

14 PASSENGER
CENTER AISLE VAN

All seats: A minimum of 26" hip to knee room shall be provided. Grey 36 oz. transportation grade vinyl. All metal components shall be powder coated and capable of meeting the following tests:

a. Salt spray 1000 hrs.
b. ASTM DL 17 humidity resistance 1000 hrs.
c. ASTM D2247 Impact resistance 1000 hrs.
d. ASTM D2794

INTERIOR LIGHTING:

a. Vehicle interior shall be illuminated by a minimum of 3 L.E.D. light fixtures.
b. Lighting fixtures shall be controlled by the chassis OEM lighting switch.
c. Opening any door shall automatically illuminate the interior for as long as the doors are open.
d. 2 L.E.D. side passenger door stepwell lights shall be provided.

PRIORITY SEATING SIGNS:

a. Vehicle shall contain a sigh which indicates that seats in the front of the vehicle are priority seats for persons with disabilities.

FLOORPLAN:

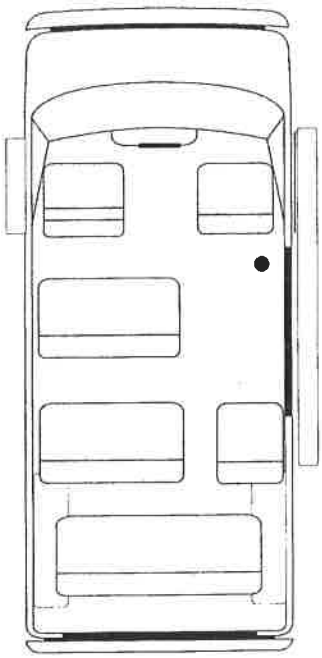

Center Aisle Raised Roof Passenger Van (10 Passenger)